RECEIVED
NOV 12 1986
DEPT. OF NATURAL RESOURCE
BUREAU OF POLLUTION CONTROL

ATTACHMENT A

Please print or type in the unshaded areas only
(fill-in areas are spaced for elite type, i.e., 12 characters/inch)

Form Approved OMB No. 158-R0175

FORM 1 GENERAL

EPA

U.S. ENVIRONMENTAL PROTECTION AGENCY

GENERAL INFORMATION

Consolidated Permits Program

(Read the "General Instructions" before starting.)

I. EPA I.D. NUMBER: F M S D 9 9 0 7 1 4 0 8 1

LABEL ITEMS	
I. EPA I.D. NUMBER	MSD990714081
III. FACILITY NAME	VERTAC CHEMICAL
V. FACILITY MAILING ADDRESS	RIFLE RANGE RD. VICKSBURG, MS.
VI. FACILITY LOCATION	RIFLE RANGE RD. VICKSBURG, MS. 39180

PLEASE PLACE LABEL IN THIS SPACE

GENERAL INSTRUCTIONS

If a preprinted label has been provided, affix it in the designated space. Review the information carefully; if any of it is incorrect, cross through it and enter the correct data in the appropriate fill-in area below. Also, if any of the preprinted data is absent *(the area to the left of the label space lists the information that should appear)*, please provide it in the proper fill-in area*(s)* below. If the label is complete and correct, you need not complete Items I, III, V, and VI *(except VI-B which must be completed regardless)*. Complete all items if no label has been provided. Refer to the instructions for detailed item descriptions and for the legal authorizations under which this data is collected.

II. POLLUTANT CHARACTERISTICS

INSTRUCTIONS: Complete A through J to determine whether you need to submit any permit application forms to the EPA. If you answer "yes" to any questions, you must submit this form and the supplemental form listed in the parenthesis following the question. Mark "X" in the box in the third column if the supplemental form is attached. If you answer "no" to each question, you need not submit any of these forms. You may answer "no" if your activity is excluded from permit requirements; see Section C of the instructions. See also, Section D of the instructions for definitions of bold-faced terms.

SPECIFIC QUESTIONS	MARK 'X' YES	NO	FORM ATTACHED
A. Is this facility a **publicly owned treatment works** which results in a **discharge to waters of the U.S.**? (FORM 2A)		X	
C. Is this a facility which currently results in **discharges to waters of the U.S.** other than those described in A or B above? (FORM 2C)	X		X
E. Does or will this facility treat, store, or dispose of **hazardous wastes**? (FORM 3)	X		
G. Do you or will you inject at this facility any produced water or other fluids which are brought to the surface in connection with conventional oil or natural gas production, inject fluids used for enhanced recovery of oil or natural gas, or inject fluids for storage of liquid hydrocarbons? (FORM 4)		X	
I. Is this facility a proposed **stationary source** which is one of the 28 industrial categories listed in the instructions and which will potentially emit 100 tons per year of any air pollutant regulated under the Clean Air Act and may affect or be located in an attainment area? (FORM 5)		X	

SPECIFIC QUESTIONS	MARK 'X' YES	NO	FORM ATTACHED
B. Does or will this facility *(either existing or proposed)* include a **concentrated animal feeding operation** or **aquatic animal production facility** which results in a **discharge to waters of the U.S.**? (FORM 2B)		X	
D. Is this a proposed facility *(other than those described in A or B above)* which will result in a **discharge to waters of the U.S.**? (FORM 2D)		X	
F. Do you or will you inject at this facility industrial or municipal effluent below the lowermost stratum containing, within one quarter mile of the well bore, underground sources of drinking water? (FORM 4)		X	
H. Do you or will you inject at this facility fluids for special processes such as mining of sulfur by the Frasch process, solution mining of minerals, in situ combustion of fossil fuel, or recovery of geothermal energy? (FORM 4)		X	
J. Is this facility a proposed **stationary source** which is NOT one of the 28 industrial categories listed in the instructions and which will potentially emit 250 tons per year of any air pollutant regulated under the Clean Air Act and may affect or be located in an attainment area? (FORM 5)		X	

III. NAME OF FACILITY

1 SKIP VERTAC CHEMICAL CORP. VICKSBURG, MS. PLANT

IV. FACILITY CONTACT

A. NAME & TITLE *(last, first, & title)*	B. PHONE *(area code & no.)*
2 AHLERS, FRED, PLANT MANAGER	601 636 1231

V. FACILITY MAILING ADDRESS

A. STREET OR P.O. BOX

3 P. O. BOX 3

B. CITY OR TOWN	C. STATE	D. ZIP CODE
4 VICKSBURG,	MS	39180

VI. FACILITY LOCATION

A. STREET, ROUTE NO. OR OTHER SPECIFIC IDENTIFIER

5 RIFLE RANGE ROAD

B. COUNTY NAME

WARREN

C. CITY OR TOWN	D. STATE	E. ZIP CODE	F. COUNTY CODE *(if known)*
6 VICKSBURG	MS	39180	

CONTINUE ON REVERSE

CONTINUED FROM THE FRONT

SIC CODES (4-digit, in order of priority)

A. FIRST	B. SECOND
2865 (specify) Organics	7 2816 (specify) Inorganics
C. THIRD	**D. FOURTH**
7 (specify)	7 (specify)

VIII. OPERATOR INFORMATION

A. NAME: VERTAC CHICAL CORPORATION

B. Is the name listed in Item VIII-A also the owner? [X] YES [ ] NO

C. STATUS OF OPERATOR (Enter the appropriate letter into the answer box; if "Other", specify.)
F = FEDERAL
S = STATE
P = PRIVATE
M = PUBLIC (other than federal or state)
O = OTHER (specify)

Answer: P (specify)

D. PHONE (area code & no.): A 901 767 6851

E. STREET OR P.O. BOX: SUITE 2414 5100 POPLAR AVE.

F. CITY OR TOWN: B MEMPHIS

G. STATE: TN

H. ZIP CODE: 38137

IX. INDIAN LAND

Is the facility located on Indian lands? [ ] YES [X] NO

X. EXISTING ENVIRONMENTAL PERMITS

A. NPDES (Discharges to Surface Water): 9 N MS0027995	**D. PSD** (Air Emissions from Proposed Sources): 9 P
B. UIC (Underground Injection of Fluids): 9 U	**E. OTHER** (specify): 9 (specify) Air application including emissions survey submitted to state.
C. RCRA (Hazardous Wastes): 9 R	**E. OTHER** (specify): 9 (specify)

XI. MAP

Attach to this application a topographic map of the area extending to at least one mile beyond property boundaries. The map must show the outline of the facility, the location of each of its existing and proposed intake and discharge structures, each of its hazardous waste treatment, storage, or disposal facilities, and each well where it injects fluids underground. Include all springs, rivers and other surface water bodies in the map area. See instructions for precise requirements.

XII. NATURE OF BUSINESS (provide a brief description)

PRODUCTION OF: (1) Pesticides (Dinobutyl Phenol & Toxaphene)

(2) Potassium Nitrate

XIII. CERTIFICATION (see instructions)

I certify under penalty of law that I have personally examined and am familiar with the information submitted in this application and all attachments and that, based on my inquiry of those persons immediately responsible for obtaining the information contained in the application, I believe that the information is true, accurate and complete. I am aware that there are significant penalties for submitting false information, including the possibility of fine and imprisonment.

A. NAME & OFFICIAL TITLE (type or print)	B. SIGNATURE	C. DATE SIGNED
R. A. Guidi, Vice President	Guidi	6-16-81

COMMENTS FOR OFFICIAL USE ONLY

C

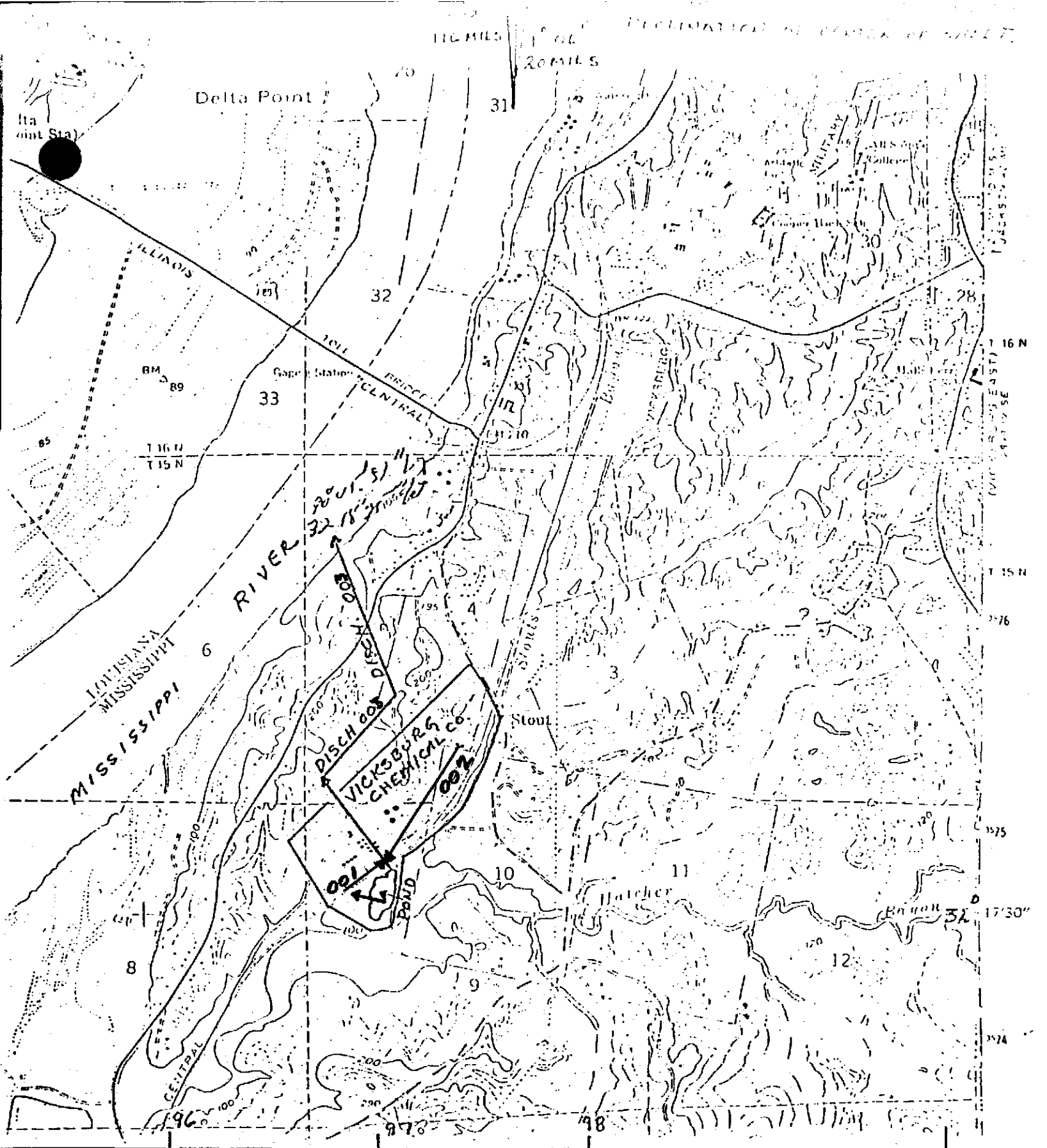

SCALE 1:24000

LOCATION MAP
FROM U.S. GEOLOGICAL SURVEY
MAP. 1972
VICKSBURG CHEMICAL CO.
VICKSBURG, WARREN, MISS.

VERTAC CHEMICAL CORP.
Vicksburg, MS. Plant

Facility Drawing

1" = 470 ft

OUTFALLS
003
002
001

No.	IDENTIFICATION	SIZE
1.	Drum Storage	80' X 80'
2.	3,000,000 Gallons surface impoundment of waste water	250' X 500'
3.	1,600,000 Gallons waste water storage tank	300' X 300'
4.	Activated carbon system	50' X 100'
5.	Inactive Landfill	300' X 300'

SCHEMATIC OF WATER FLOW

VERTAC CHEMICAL CORPORATION
P. O. BOX 3
VICKSBURG, MS. 39180

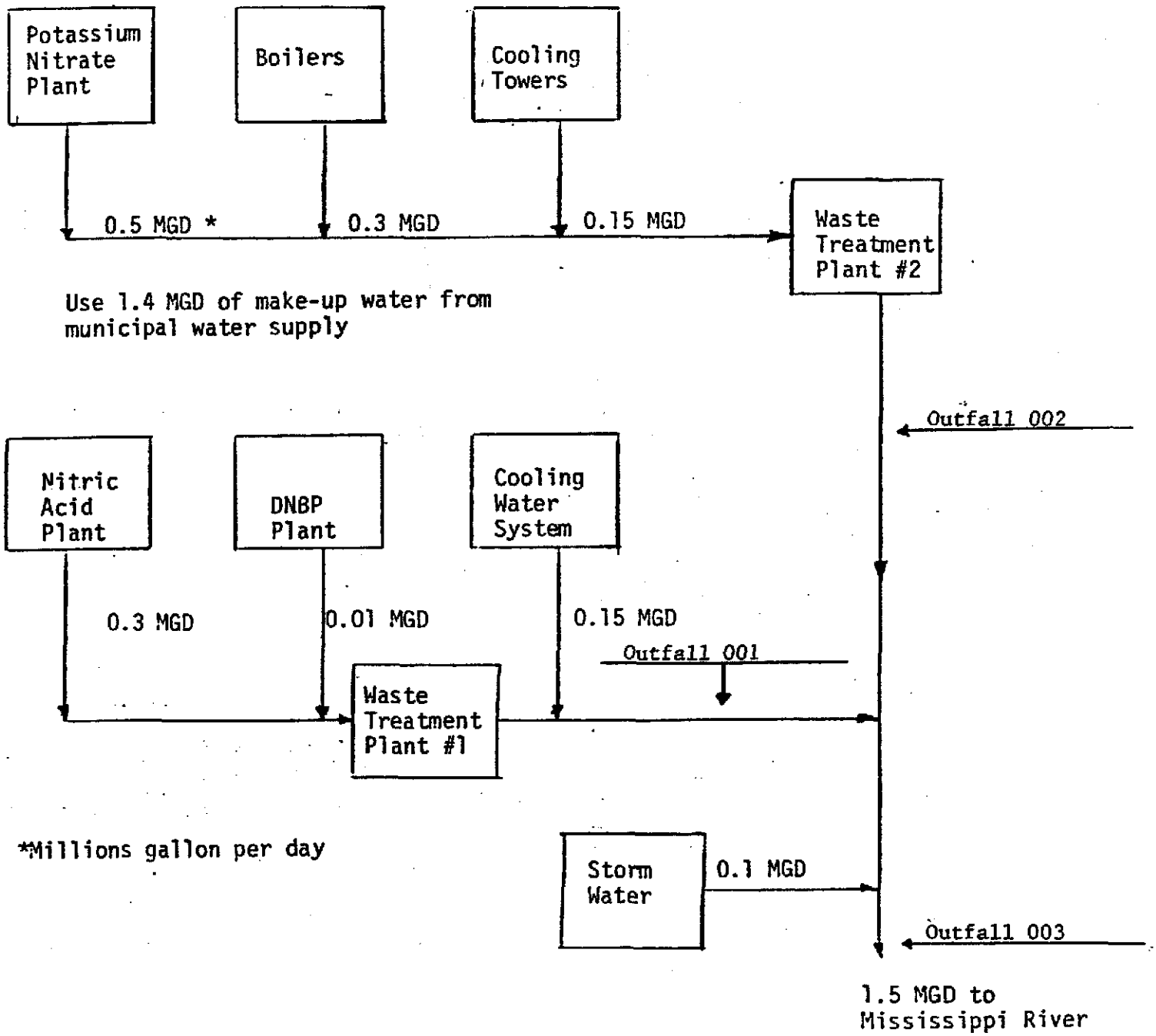

Ms. 990714081

...UFACTURING, ...NG AND SILVE...

...ts Program

...ocation to the nearest ... of the receiving water.

	B. LATITUDE			C. LONGITUDE			D. RECEIVING WATER (name)
	1. DEG.	2. MIN.	3. SEC.	1. DEG.	2. MIN.	3. SEC.	
001	32	18	25	90	05	31	(ENTERS OUTFALL 003)
002	32	18	25	90	05	31	(ENTERS OUTFALL 003)
003	32	18	25	90	05	31	MISSISSIPPI RIVER

...RCES OF POLLUTION, AND TREATMENT TECHNOLOGIES

...e drawing showing the water flow through the facility. Indicate sources of intake water, operations contributing wastewater to the effl... ...ent units labeled to correspond to the more detailed descriptions in Item B. Construct a water balance on the line drawing by showing ... ...intakes, operations, treatment units, and outfalls. If a water balance cannot be determined *(e.g., for certain mining activi...* ...description of the nature and amount of any sources of water and any collection or treatment measures.

...outfall, provide a description of: (1) All operations contributing wastewater to the effluent, including process wastewater, sani... ...water and storm water runoff; (2) The average flow contributed by each operation; and (3) The treatment received by the wastewater ... ...of sheets if necessary.

	2. OPERATION(S) CONTRIBUTING FLOW		3. TREATMENT		
	a. OPERATION (list)	b. AVERAGE FLOW (include units)	a. DESCRIPTION	b. LIST CODE FROM TABLE	
001	NITRIC ACID PLANT	0.3*	pH ADJUSTMENT, CARBON ADSORPTION	2K	2A
	DNBP PLANT	0.005	" "	2K	2A
	TOXAPHENE PLANT	0.005	" "	2K	2A
	COOLING WATER SYSTEM	0.15	" "	2K	2A
002	POTASSIUM NITRATE	0.5	pH ADJUSTMENT	2K	
	BOILER BLOW DOWN	0.3	"	2K	
	COOLING TOWER WATER	0.15	"	2K	
003	NITRIC ACID PLANT	0.3	pH ADJUSTMENT, CARBON ADSORPTION	2K	2A
	DNBP PLANT	0.005	" "		
	TOXAPHENE PLANT	0.005	" "		
	COOLING WATER SYSTEM	0.15	" "		
	POTASSIUM NITRATE	0.5	pH ADJUSTMENT	2K	
	BOILER BLOW DOWN	0.3	" "	2K	
	COOLING TOWER WATER	0.15	" "	2K	
	STORM WATER	0.1	NONE		
	*=MILLION GALLONS PER DAY				

OFFICIAL USE ONLY *(effluent guidelines sub-categories)*

1. OUTFALL NUMBER (list)	2. OPERATION(s) CONTRIBUTING FLOW (list)	3. FREQUENCY: a. DAYS PER WEEK (specify average)	3. FREQUENCY: b. MONTHS PER YEAR (specify average)	4. FLOW RATE (in gpd): 1. LONG TERM AVERAGE	4. FLOW RATE (in gpd): 2. MAXIMUM DAILY	4. FLOW: b. TOTAL (specify) 1. LONG TERM AVERAGE
001	DINITROPHENOL PLANT	7	6			
001	TOXAPHENE PLANT	7	6			

III. MAXIMUM PRODUCTION

A. Does an effluent guideline limitation promulgated by EPA under Section 304 of the Clean Water Act apply to your facility?

[X] YES *(complete Item III-B)* [ ] NO *(go to Section IV)*

B. Are the limitations in the applicable effluent guideline expressed in terms of production *(or other measure of operation)*?

[X] YES *(complete Item III-C)* [ ] NO *(go to Section IV)*

C. If you answered "Yes" to Item III-B, list the quantity which represents an actual measurement of your maximum level of production and units used in the applicable effluent guideline, and indicate the affected outfalls.

1. MAXIMUM QUANTITY: a. QUANTITY PER DAY	b. UNITS OF MEASURE	c. OPERATION, PRODUCT, MATERIAL, ETC. (specify)	d. AFFECTED OUTFALLS
25,000	LBS	DINITROBUTYL PHENOL (DNBP)	001, 003
500,000	LBS	NITRIC ACID	001, 003
600,000	LBS	POTASSIUM NITRATE	002, 003
58,300	LBS	TOXAPHENE	001, 003

IV. IMPROVEMENTS

A. Are you now required by any Federal, State or local authority to meet any implementation schedule for the construction, upgrading or operation of wastewater treatment equipment or practices or any other environmental programs which may affect the discharges described in this application? This includes, but is not limited to, permit conditions, administrative or enforcement orders, enforcement compliance schedule letters, stipulations, court orders, and grant or loan conditions.

[ ] YES *(complete the following table)* [X] NO *(go to Item IV-B)*

1. IDENTIFICATION OF CONDITION, AGREEMENT, ETC.	2. AFFECTED OUTFALLS: a. NO.	2. AFFECTED OUTFALLS: b. SOURCE OF DISCHARGE	3. BRIEF DESCRIPTION OF PROJECT	4. EST. COMPLETION DATE: a. REQUIRED	4. EST. COMPLETION DATE: b. PROJECTED

B. OPTIONAL: You may attach additional sheets describing any additional water pollution control programs *(or other environmental programs which may affect your discharges)* you now have underway or which you plan. Indicate whether each program is now underway or planned, and indicate actual or planned schedules for construction. [ ] MARK "X" IF DESCRIPTION OF ADDITIONAL CONTROL PROGRAMS IS ATTACHED

MS 990714081

[illegible] OMB No. [illegible]

[illegible] ITICS

[illegible] – Complete [illegible] for each outfall – Announce the [illegible] in the space provided. [illegible] V-A, [illegible] V-C are included [illegible] numbered V-1 through [illegible]

[illegible] the pollutants listed in Table [illegible] of the instructions, which you know or have reason to believe is discharged [illegible] every pollutant you list, briefly describe the reasons you believe it to be present and report any analytical [illegible]

[illegible]	2. SOURCE	1. POLLUTANT	2. SOURCE
	NONE ARE KNOWN OR BELIEVED TO BE PRESENT.		

[illegible] DISCHARGES NOT COVERED BY ANALYSIS

[illegible] listed in Item V-C a substance or a component of a substance which you do or expect that you will over the next 5 years use or [illegible] final product or byproduct?

☐ YES *(list all such pollutants below)* ☒ NO *(go to Item VI-B)*

NO NEW PRODUCTS ARE KNOWN TO CONTAIN ANY OF THE SUBSTANCES LISTED IN ITEM V.C.

B. Are your operations such that your raw materials, processes, or products can reasonably be expected to vary so that your discharges of pollutants may during the next 5 years exceed two times the maximum values reported in Item V?

☐ YES *(complete Item VI-C below)* ☒ NO *(go to Section VII)*

C. If you answered "Yes" to Item VI-B, explain below and describe in detail the sources and expected levels of such pollutants which you anticipate will be discharged from each outfall over the next 5 years, to the best of your ability at this time. Continue on additional sheets if you need more space.

X

A STATIC BIOASSAY WAS PERFORMED TO DETERMINE THE 96 HOUR LETHAL CONCENTRATION (LC_{50})

VIII. CONTRACT ANALYSIS INFORMATION

(Were any of the analyses reported in Item V performed by a contract laboratory or consulting firm?)

[X] YES *(list the name, address, and telephone number of, and pollutants analyzed by, each such laboratory or firm below)* [ ] NO *(go to Section IX)*

A. NAME	B. ADDRESS	C. TELEPHONE *(area code & no.)*	D. POLLUTANTS ANALYZED *(list)*
ENVIRONMENTAL PROTECTION SYSTEMS	P. O. BOX 20382 JACKSON, MS. 39209	(601) 922-8242	ALL THE PRIORTY POLLUTANTS

IX. CERTIFICATION

I certify under penalty of law that I have personally examined and am familiar with the information submitted in this application and all attachments and that, based on my inquiry of those individuals immediately responsible for obtaining the information, I believe that the information is true, accurate and complete. I am aware that there are significant penalties for submitting false information, including the possibility of fine and imprisonment.

A. NAME & OFFICIAL TITLE *(type or print)*	B. PHONE NO. *(area code & no.)*
R. A. Guidi, Vice President	901-769-6857
C. SIGNATURE	**D. DATE SIGNED**
[signature]	6-26-81

PLEASE PRINT OR TYPE IN THE UNSHADED AREAS ONLY. You may report some or all of this information on separate sheets *(use the same format)* instead of completing these pages. SEE INSTRUCTIONS.

EPA I.D. NUMBER *(copy from Item 1 of Form 1)*: MSD990714081

Form Approved 0348

001

V. INTAKE AND EFFLUENT CHARACTERISTICS *(continued from page 3 of Form 2C)*

PART A - You must provide the results of at least one analysis for every pollutant in this table. Complete one table for each outfall. See instructions for additional details.

1. POLLUTANT	2. EFFLUENT a. MAXIMUM DAILY VALUE (1) CONCENTRATION	(2) MASS	b. MAXIMUM 30 DAY VALUE (if available) (1) CONCENTRATION	(2) MASS	c. LONG TERM AVRG. VALUE (if available) (1) CONCENTRATION	(2) MASS	d. NO. OF ANALYSES	3. UNITS (specify if blank) a. CONCENTRATION	b. MASS	4. INTAKE (optional) a. LONG TERM AVERAGE VALUE (1) CONCENTRATION	(2) MASS
a. Biochemical Oxygen Demand *(BOD)*	36	239	16.6	122	11.1	74.5	10	PPM	LBS		
b. Chemical Oxygen Demand *(COD)*	284	1878	47.6	349.9	70.6	530	14	"	"		
c. Total Organic Carbon *(TOC)*	301	2493	41.3	448	NOT AVAILABLE		1	"	"		
d. Total Suspended Solids *(TSS)*	110	440.8	25.4	102.9	11.8	69.8	7	"	"		
e. Ammonia *(as N)*	220	2577	71.7	783	NOT AVAILABLE		7	"	"		
f. Flow	VALUE 3.0		VALUE 1.3		VALUE 0.8578		1	MGD		VALUE	
g. Temperature *(winter)*	VALUE 26		VALUE 26		VALUE 17		–	°C		VALUE	
h. Temperature *(summer)*	VALUE 33		VALUE 33		VALUE 26		–	°C		VALUE	
i. pH	MINIMUM 6.0	MAXIMUM 9.0	MINIMUM 6.1	MAXIMUM 9.0			–	STANDARD UNITS			

PART B - Mark "X" in column 2-a for each pollutant you know or have reason to believe is present. Mark "X" in column 2-b for each pollutant you believe to be absent. If you mark column 2-a for any pollutant, you must provide the results of at least one analysis for that pollutant. Complete one table for each outfall. See the instructions for additional details and requirements.

1. POLLUTANT AND CAS NO. (if available)	2. MARK 'X' a. BELIEVED PRESENT	b. BELIEVED ABSENT	3. EFFLUENT a. MAXIMUM DAILY VALUE (1) CONCENTRATION	(2) MASS	b. MAXIMUM 30 DAY VALUE (if available) (1) CONCENTRATION	(2) MASS	c. LONG TERM AVRG. VALUE (if available) (1) CONCENTRATION	(2) MASS	d. NO. OF ANALYSES	4. UNITS a. CONCENTRATION	b. MASS	5. INTAKE (optional) a. LONG TERM AVERAGE VALUE (1) CONCENTRATION	(2) MASS
a. Bromide (24959-67-9)		X											
b. Chlorine, Total Residual	X		20	89	NOT AVAILABLE		NOT AVAILABLE		1	mg/L	LBS		
c. Color	X		2 50	–	"	"	"	"	1	PCU	–		
d. Fecal Coliform		X											
e. Fluoride (16984-48-8)	X		< 0.01	< 0.05	"	"	"	"	1	mg/L	LBS		
f. Nitrate-Nitrite *(as N)*			770	6797	224	1000	224	1877	240	mg/L	LBS		

ITEM V-B CONTINUED FROM FRONT

1. POLLUTANT AND CAS NO. (if available)	2. MARK 'X' a. est. believed present	b. est. believed absent	3. EFFLUENT a. MAXIMUM DAILY VALUE (1) CONCENTRATION	(2) MASS	b. MAXIMUM 30 DAY VALUE (if available) (1) CONCENTRATION	(2) MASS	c. LONG TERM AVRG. VALUE (if available) CONCENTRATION	(2) MASS	d. NO. OF ANALYSES	4. UNITS a. CONCENTRATION	b. MASS	5. INTAKE (optional) a. LONG TERM AVRG. VALUE (1) CONCENTRATION	(2) MASS
g. Nitrogen, Total Organic (as N)	x		4.2	19	NOT AVAILABLE		NOT AVAILABLE		1	mg/L	LBS		
h. Oil and Grease	x		< 0.1	< 0.5	"	"	"	"	1	"	"		
i. Phosphorus (as P), Total (7723-14-0)	x		< 0.1	< 0.7	"	"	"	"	1	"	"		
j. Radioactivity													
(1) Alpha, Total		x											
(2) Beta, Total		x											
(3) Radium, Total		x											
(4) Radium 226, Total		x											
k. Sulfate (as SO_4) (14808-79-8)	x		184	822	"	"	"	"	1	mg/L	LBS		
l. Sulfide (as S)		x											
m. Sulfite (as SO_3) (14265-45-3)	x		8.22	36.7	"	"	"	"	1	mg/L	LBS		
n. Surfactants	x		1.12	5.0	"	"	"	"	1	"	"		
o. Aluminum, Total (7429-90-5)	x		< 0.008	< 0.04	"	"	"	"	1	"	"		
p. Barium, Total (7440-39-3)	x		< 0.1	< 0.44	"	"	"	"	1	"	"		
q. Boron, Total (7440-42-8)	x		0.14	0.62	"	"	"	"	1	"	"		
r. Cobalt, Total (7440-48-4)	x		< 0.09	< 0.44	"	"	"	"	1	"	"		
s. Iron, Total (7439-89-6)	x		3.63	16.2	"	"	"	"	1	"	"		
t. Magnesium, Total (7439-95-4)	x		0.22	0.98	"	"	"	"	1	"	"		
u. Molybdenum, Total (7439-98-7)	x		0.04	0.18	"	"	"	"	1	"	"		
v. Manganese, Total (7439-96-5)		x											
w. Tin, Total (7440-31-5)	x		0.09	0.44	"	"	"	"	1	"	"		
x. Titanium, Total (7440-32-6)	x		< 0.04	< 0.18	"	"	"	"	1	"	"		

PLEASE PRINT OR TYPE IN THE UNSHADED AREAS ONLY. You may report some or all of this information on separate sheets (use the same format) instead of completing these pages. See INSTRUCTIONS.

MSD990714081

002

PART A - You must provide the results of at least one analysis for every pollutant in this table.

1. POLLUTANT	3. EFFLUENT a. MAXIMUM DAILY VALUE (1) CONCENTRATION	(2) MASS	b. MAXIMUM 30 DAY VALUE (if available) (1) CONCENTRATION	(2) MASS	c. LONG TERM AVRG. VALUE (if available) (1) CONCENTRATION	(2) MASS	d. NO. OF ANALYSES	a. CONCENTRATION	b. MASS	5. INTAKE (optional) a. LONG TERM AVERAGE VALUE (1) CONCENTRATION	(2) MASS
a. Biochemical Oxygen Demand (BOD)	0 (interference)	0	98.5	252	30	60.3	12	PPM	LBS		
b. Chemical Oxygen Demand (COD)	0 (interference)	0	296	635	181	351	12	PPM	LBS		
c. Total Organic Carbon (TOC)	137.4	357	NOT AVAILABLE		NOT AVAILABLE		1	PPM	LBS		
d. Total Suspended Solids (TSS)	172	250	172	250	71.7	142	12	PPM	LMS		
e. Ammonia (as N)	0	0	0	0	0	0	1	PPM	LBS		
f. Flow	VALUE o.7701		VALUE 2.7		VALUE 0.3633		-	-	MGD	VALUE	
g. Temperature (winter)	VALUE 24		VALUE 20		VALUE NOT AVAILABLE		-	°C		VALUE	
h. Temperature (summer)	VALUE 33		VALUE 33		VALUE NOT AVAILABLE		-	°C		VALUE	
i. pH	MINIMUM 2.0	MAXIMUM 9.7	MINIMUM 6.6	MAXIMUM 9.0			-	STANDARD UNITS			

PART B - Mark "X" in column 2-a for each pollutant you know or have reason to believe is present. Mark "X" in column 2-b for each pollutant you believe to be absent. If you answer "no" in column 2-a for any pollutant, you must provide the results of at least one analysis for that pollutant. Complete one table for each outfall. See the instructions for details and requirements.

1. POLLUTANT AND CAS NO. (if available)	2. MARK 'X' a. BELIEVED PRESENT	b. BELIEVED ABSENT	3. EFFLUENT a. MAXIMUM DAILY VALUE (1) CONCENTRATION	(2) MASS	b. MAXIMUM 30 DAY VALUE (if available) (1) CONCENTRATION	(2) MASS	c. LONG TERM AVRG. VALUE (if available) (1) CONCENTRATION	(2) MASS	d. NO. OF ANALYSES	a. CONCENTRATION	b. MASS	5. INTAKE (optional) a. LONG TERM AVERAGE VALUE (1) CONCENTRATION	(2) MASS
a. Bromide (24959 67 9)	X		< 0.01	<0.026	NOT AVAILABLE		NOT AVAILABLE		1	mg/L	LBS.		
b. Chlorine, Total Residual	X		.4	.9	2.1	5.4	"	"	1	"	"		
c. Color	X		20	-	NOT AVAILABLE		NOT AVAILABLE		1	PCU	-		
d. Fecal Coliform		X											
e. Fluoride (16984 48 8)	X		< 0.01	<0.026	"	"	"	"	1	mg/L	LBS.		
f. Nitrate-Nitrite (as N)	X		2525	10239	1957	7750	575	4308	240	mg/L	LBS.		

ITEM V-B CONTINUED FROM FRONT

1. POLLUTANT AND CAS NO. (if available)	2. MARK 'X' a. BELIEVED PRESENT	b. BELIEVED ABSENT	3. EFFLUENT a. MAXIMUM DAILY VALUE (1) CONCENTRATION	(2) MASS	b. MAXIMUM 30 DAY VALUE (if available) (1) CONCENTRATION	(2) MASS	c. LONG TERM AVG. VALUE (if available) (1) CONCENTRATION	(2) MASS	d. NO. OF ANALYSES	4. UNITS (1) CONCENTRATION	(2) MASS	5. INTAKE a. LONG TERM AVERAGE VALUE (1) CONCENTRATION	(2) MASS
g. Nitrogen, Total Organic (as N)		X			NOT AVAILABLE		NOT AVAILABLE						
h. Oil and Grease	X		< 0.1	< 0.26	"	"	"	"	1	mg/L	LBS.		
i. Phosphorus (as P), Total (7723-14-0)		X											
j. Radioactivity													
(1) Alpha, Total		X											
(2) Beta, Total		X											
(3) Radium, Total		X											
(4) Radium 226, Total		X											
k. Sulfate (as SO_4) (14808-79-8)	X		53.6	140	"	"	"	"	1	mg/L	LBS.		
l. Sulfide (as S)		X											
m. Sulfite (as SO_3) (14265-45-3)	X		2.22	5.8	"	"	"	"	1	mg/L	LBS.		
n. Surfactants	X		1.07	2.8	"	"	"	"	1	"	"		
o. Aluminum, Total (7429-90-5)	X		< 0.008	< 0.02	"	"	"	"	1	"	"		
p. Barium, Total (7440-39-3)	X		< 0.01	< 0.03	"	"	"	"	1	"	"		
q. Boron, Total (7440-42-8)	X		0.14	0.37	"	"	"	"	1	"	"		
r. Cobalt, Total (7440-48-4)	X		< 0.09	< 0.26	"	"	"	"	1	"	"		
s. Iron, Total (7439-89-6)	X		3.8	10.0	"	"	"	"	1	"	"		
t. Magnesium, Total (7439-95-4)	X		0.22	0.58	"	"	"	"	1	"	"		
u. Molybdenum, Total (7439-98-7)	X		0.038	0.10	"	"	"	"	1	"	"		
v. Manganese, Total (7439-96-5)		X											
w. Tin, Total (7440-31-5)	X		0.09	0.26	"	"	"	"	1	mg/L	LBS.		
x. Titanium, Total (7440-[illegible])			< 0.04	< 0.10	"	"	"	"	1	"	"		

ASE PRINT OR TYPE IN THE UNSHADED AREAS ONLY. You may report some or all of information on separate sheets *(use the same format)* instead of completing these pages.

EPA I.D. NUMBER *(copy from Item 1 of Form 1)*: MSD990714081

Form Approved OMB No. 158-R0173

OUTFALL NO. 003

PLUS I CHARACTE

Provide the results of at least one analysis for every pollutant in this table. Complete one table for each outfall. See instructions for additional details. 003

	2. EFFLUENT							3. UNITS (specify if blank)		4. INTAKE (optional)		
	a. MAXIMUM DAILY VALUE		b. MAXIMUM 30 DAY VALUE (if available)		c. LONG TERM AVRG. VALUE (if available)		d. NO. OF ANALYSES	a. CONCENTRATION	b. MASS	a. LONG TERM AVERAGE VALUE		b. NO. OF ANALYSES
	(1) CONCENTRATION	(2) MASS	(1) CONCENTRATION	(2) MASS	(1) CONCENTRATION	(2) MASS				(1) CONCENTRATION	(2) MASS	
	36	239	16.6	122	NOT AVAILABLE		18	PPM	LBS.			
	206	1828	58	427	"	"	12	"	"			
	301	3493	119	872	"	"	18	"	"			
	22	257	14.8	113	"	"	18	"	"			
	220	2577	41.8	296	"	"	12	"	"			
	VALUE 4.2		VALUE 2.1		VALUE 1.050		–	–	M.G.D.	VALUE		
	VALUE 14.4		VALUE 8.9		VALUE NOT AVAILABLE		–	°C		VALUE		
	VALUE 33.9		VALUE 24.9		VALUE NOT AVAILABLE		–	°C		VALUE		
	MINIMUM 6.1	MAXIMUM 9.0	MINIMUM 2.5	MAXIMUM 10.2			–	STANDARD UNITS				

Mark "X" in column 2-a for each pollutant you know or have reason to believe is present. Mark "X" in column 2-b for each pollutant you believe to be absent. If you mark column 2-a for any pollutant, you must provide the results of at least one analysis for that pollutant. Complete one table for each outfall. See the instructions for additional details and requirements.

1. POLLUTANT AND CAS NO. (if available)	2. MARK "X" a. BELIEVED PRESENT	b. BELIEVED ABSENT	3. EFFLUENT a. MAXIMUM DAILY VALUE (1) CONCENTRATION	(2) MASS	b. MAXIMUM 30 DAY VALUE (if available) (1) CONCENTRATION	(2) MASS	c. LONG TERM AVRG. VALUE (if available) (1) CONCENTRATION	(2) MASS	d. NO. OF ANALYSES	4. UNITS a. CONCENTRATION	b. MASS	5. INTAKE (optional) a. LONG TERM AVERAGE VALUE (1) CONCENTRATION	(2) MASS	b. NO. OF ANALYSES
ide (67 9)	x		< 0.01	< 0.08	NOT AVAILABLE		NOT AVAILABLE		1	mg/L	LBS			
	x		20	141.6	"	"	"	"	1	"	"			
	x		5	–	"	"	"	"	1	PCU	–			
		x												
	x		< .01	< 0.08	"	"	"	"	1	mg/L	LBS			
			2780	23,959	1916	4549	907	5094	110	mg/L	LBS			

EPA FORM 3510-2C (8-90) PAGE V-1

CONTINUE ON REVERSE

									UNITS				
									a. CONCENTRATION	b. MASS	AVERAGE VALUE (a) CONCENTRATION	(b) MASS	
x		< 0.1	< 0.7	NOT AVAILABLE		NOT AVAILABLE		1	PPM	LBS			
x		< 0.1	< 0.7	"	"	"	"	1	"	"			
x		< 0.1	< 0.7	"	"	"	"	1	"	"			
	x												
	x												
	x												
	x												
x		144.4	1022	"	"	"	"	1	PPM	LBS			
x		< 0.06	< .42	"	"	"	"	1	"	"			
x		6.0	42.48	"	"	"	"	1	"	"			
x		1.1	7.78	"	"	"	"	1	"	"			
x		< 0.008	< 0.06	"	"	"	"	1	"	"			
x		< 0.1	< 0.7	"	"	"	"	1	"	"			
x		0.14	0.99	"	"	"	"	1	"	"			
x		< 0.01	< 0.07	"	"	"	"	1	"	"			
x		3.7	26.2	"	"	"	"	1	"	"			
x		0.22	1.56	"	"	"	"	1	"	"			
x		0.04	0.28	"	"	"	"	1	"	"			
	x												
x		0.1	0.7	"	"	"	"	1	PPM	LBS			
x		< 0.04	< 0.28	"	"	"	"	1	"	"			

CONTINUED ON PAGE V-3

RECEIVED
NOV 12 1986
DEPT. OF NATURAL RESOURCE
BUREAU OF POLLUTION CONTROL

ATTACHMENT B

Please print or type in the unshaded areas only
(fill-in areas are spaced for elite type, i.e., 12 characters/inch).

Form Approved. OMB No. 2000-0474. Approval expires 4-30-85

FORM 1 GENERAL

EPA

U.S. ENVIRONMENTAL PROTECTION AGENCY

GENERAL INFORMATION

Consolidated Permits Program

(Read the "General Instructions" before starting.)

I. EPA I.D. NUMBER

F MSD990714081

LABEL ITEMS

I. EPA I.D. NUMBER

III. FACILITY NAME

V. FACILITY MAILING ADDRESS

VI. FACILITY LOCATION

PLEASE PLACE LABEL IN THIS SPACE

GENERAL INSTRUCTIONS

If a preprinted label has been provided, affix it in the designated space. Review the information carefully; if any of it is incorrect, cross through it and enter the correct data in the appropriate fill-in area below. Also, if any of the preprinted data is absent (*the area to the left of the label space lists the information that should appear*), please provide it in the proper fill-in area(s) below. If the label is complete and correct, you need not complete Items I, III, V, and VI (*except VI-B which must be completed regardless*). Complete all items if no label has been provided. Refer to the instructions for detailed item descriptions and for the legal authorizations under which this data is collected.

II. POLLUTANT CHARACTERISTICS

INSTRUCTIONS: Complete A through J to determine whether you need to submit any permit application forms to the EPA. If you answer "yes" to any questions, you must submit this form and the supplemental form listed in the parenthesis following the question. Mark "X" in the box in the third column if the supplemental form is attached. If you answer "no" to each question, you need not submit any of these forms. You may answer "no" if your activity is excluded from permit requirements; see Section C of the instructions. See also, Section D of the instructions for definitions of bold-faced terms.

SPECIFIC QUESTIONS	MARK 'X' YES	MARK 'X' NO	MARK 'X' FORM ATTACHED
A. Is this facility a **publicly owned treatment works** which results in a **discharge** to waters of the U.S.? (FORM 2A)		X	
B. Does or will this facility (*either existing or proposed*) include a **concentrated animal feeding operation** or **aquatic animal production facility** which results in a **discharge** to waters of the U.S.? (FORM 2B)		X	
C. Is this a facility which currently results in **discharges** to waters of the U.S. other than those described in A or B above? (FORM 2C)	X		X
D. Is this a proposed facility (*other than those described in A or B above*) which will result in a **discharge** to waters of the U.S.? (FORM 2D)		X	
E. Does or will this facility treat, store, or dispose of **hazardous wastes**? (FORM 3)	X		
F. Do you or will you inject at this facility industrial or municipal effluent below the lowermost stratum containing, within one quarter mile of the well bore, underground sources of drinking water? (FORM 4)		X	
G. Do you or will you inject at this facility any produced water or other fluids which are brought to the surface in connection with conventional oil or natural gas production, inject fluids used for enhanced recovery of oil or natural gas, or inject fluids for storage of liquid hydrocarbons? (FORM 4)		X	
H. Do you or will you inject at this facility fluids for special processes such as mining of sulfur by the Frasch process, solution mining of minerals, in situ combustion of fossil fuel, or recovery of geothermal energy? (FORM 4)		X	
I. Is this facility a proposed **stationary source** which is one of the 28 industrial categories listed in the instructions and which will potentially emit 100 tons per year of any air pollutant regulated under the Clean Air Act and may affect or be located in an **attainment area**? (FORM 5)		X	
J. Is this facility a proposed **stationary source** which is NOT one of the 28 industrial categories listed in the instructions and which will potentially emit 250 tons per year of any air pollutant regulated under the Clean Air Act and may affect or be located in an **attainment area**? (FORM 5)			

III. NAME OF FACILITY

1 SKIP Vertac Chemical Corp. Vicksburg MS Plant

IV. FACILITY CONTACT

A. NAME & TITLE (*last, first, & title*)	B. PHONE (*area code & no.*)		
2 Hill, John G. Environmental Eng.	601	636	1231

V. FACILITY MAILING ADDRESS

A. STREET OR P.O. BOX

3 P. O. Box 3

B. CITY OR TOWN	C. STATE	D. ZIP CODE
4 Vicksburg	MS	39180

VI. FACILITY LOCATION

A. STREET, ROUTE NO. OR OTHER SPECIFIC IDENTIFIER

5 Rifle Range Road

B. COUNTY NAME

Warren

C. CITY OR TOWN	D. STATE	E. ZIP CODE	F. COUNTY CODE (*if known*)
6 Vicksburg	MS	39180	

CONTINUED FROM THE FRONT

VII. SIC CODES (4-digit, in order of priority)

A. FIRST	B. SECOND
2865 (specify) Organics	(specify) Inorganics
C. THIRD	**D. FOURTH**
(specify)	(specify)

VIII. OPERATOR INFORMATION

A. NAME: Vertac Chemical Corporation

B. Is the name listed in Item VIII-A also the owner? ☐ YES ☐ NO

C. STATUS OF OPERATOR (Enter the appropriate letter into the answer box; if "Other", specify.)
F = FEDERAL
S = STATE
P = PRIVATE
M = PUBLIC (other than federal or state)
O = OTHER (specify)

Answer: P (specify)

D. PHONE (area code & no.): A 901 767 6851

E. STREET OR P.O. BOX: Suite 2414 5100 Poplar Ave.

F. CITY OR TOWN: Memphis

G. STATE: TN

H. ZIP CODE: 38137

IX. INDIAN LAND

Is the facility located on Indian lands? ☐ YES ☒ NO

X. EXISTING ENVIRONMENTAL PERMITS

A. NPDES (Discharges to Surface Water): 9 N MS0027995	**D. PSD** (Air Emissions from Proposed Sources): 9 P NA
B. UIC (Underground Injection of Fluids): 9 U NA	**E. OTHER** (specify): 9 2780-00041 (specify) Air Pollution Control
C. RCRA (Hazardous Wastes): 9 R MSD990714081	**E. OTHER** (specify): 9 (specify)

XI. MAP

Attach to this application a topographic map of the area extending to at least one mile beyond property bounderies. The map must show the outline of the facility, the location of each of its existing and proposed intake and discharge structures, each of its hazardous waste treatment, storage, or disposal facilities, and each well where it injects fluids underground. Include all springs, rivers and other surface water bodies in the map area. See instructions for precise requirements.

XII. NATURE OF BUSINESS (provide a brief description)

Production of 2 sec butyl Dinitrophenol
Monosodium methane arsenate
Nitric Acid
Potassium Nitrate
Chlorine
Nitrogen Tetroxide
Toll Chemical Manufacturing

XIII. CERTIFICATION (see instructions)

I certify under penalty of law that I have personally examined and am familiar with the information submitted in this application and all attachments and that, based on my inquiry of those persons immediately responsible for obtaining the information contained in the application, I believe that the information is true, accurate and complete. I am aware that there are significant penalties for submitting false information, including the possibility of fine and imprisonment.

A. NAME & OFFICIAL TITLE (type or print)	B. SIGNATURE	C. DATE SIGNED
	/s/ R. A Guidi	1/3/86

COMMENTS FOR OFFICIAL USE ONLY

Please print or type in the unshaded areas only.

EPA I.D. NUMBER (copy from Item 1 of Form 1): MSD 990714081

Form Approved OMB No. 158-R0173

FORM 2C NPDES

EPA

U.S. ENVIRONMENTAL PROTECTION AGENCY
APPLICATION FOR PERMIT TO DISCHARGE WASTEWATER
EXISTING MANUFACTURING, COMMERCIAL, MINING AND SILVICULTURAL OPERATIONS
Consolidated Permits Program

OUTFALL LOCATION

For each outfall, list the latitude and longitude of its location to the nearest 15 seconds and the name of the receiving water.

A. OUTFALL NUMBER (list)	B. LATITUDE			C. LONGITUDE			D. RECEIVING WATER (name)
	1. DEG.	2. MIN.	3. SEC.	1. DEG.	2. MIN.	3. SEC.	
001	32	18	25	90	05	31	Enters Outfall 003
002	32	18	25	90	05	31	Enters Outfall 001 or 003
003	32	18	25	90	05	30	Mississippi River

II. FLOWS, SOURCES OF POLLUTION, AND TREATMENT TECHNOLOGIES

A. Attach a line drawing showing the water flow through the facility. Indicate sources of intake water, operations contributing wastewater to the effluent, and treatment units labeled to correspond to the more detailed descriptions in Item B. Construct a water balance on the line drawing by showing average flows between intakes, operations, treatment units, and outfalls. If a water balance cannot be determined *(e.g., for certain mining activities)*, provide a pictorial description of the nature and amount of any sources of water and any collection or treatment measures.

B. For each outfall, provide a description of: (1) All operations contributing wastewater to the effluent, including process wastewater, sanitary wastewater, cooling water, and storm water runoff; (2) The average flow contributed by each operation; and (3) The treatment received by the wastewater. Continue on additional sheets if necessary.

1. OUTFALL NO. (list)	2. OPERATION(S) CONTRIBUTING FLOW		3. TREATMENT	
	a. OPERATION (list)	b. AVERAGE FLOW (include units)	a. DESCRIPTION	b. LIST CODE FROM TABLE 2C-1
001	Nitric Acid Plant	0.19 mgd	pH control via NaOH	2-K
	DNBP Plant	0.003 "	or H_2SO_4 addition. Carbon	2-A
	Custom Mfg 4-2000	0.005 "	Adsorption via 4-20,000 lb.	
	Cooling Water System	0.11 "	granular carbon beds	
	Outfall 002	0.09 "		
	Rain	0.06 "		
002	Potassium Nitrate Plant	0.15 mgd	pH controll via NaOH	2-K
	Boiler System (gas)	0.02 "	or H_2SO_4 addition.	
	Cooling Water System	0.05 "		
	Rain	0.03 "		
003	Outfall 001	0.46 mgd	Combined outfall for	1-0
	Outfall 002 (1)	0.16 "	discharge.	
	003 Total	0.62 "		
	(1) Excludes portion of flow included in Outfall 001.			

OFFICIAL USE ONLY *(effluent guidelines sub-categories)*

CONTINUED FROM THE FRONT

C. Except for storm runoff, leaks, or spills, are any of the discharges described in Items II-A or B intermittent or seasonal?

[X] YES *(complete the following table)* [ ] NO *(go to Section III)*

1. OUTFALL NUMBER *(list)*	2. OPERATION(s) CONTRIBUTING FLOW *(list)*	3. FREQUENCY a. DAYS PER WEEK *(specify average)*	3. FREQUENCY b. MONTHS PER YEAR *(specify average)*	4. FLOW a. FLOW RATE *(in mgd)* 1. LONG TERM AVERAGE	4. FLOW a. FLOW RATE *(in mgd)* 2. MAXIMUM DAILY	4. FLOW b. TOTAL VOLUME *(specify with units)* 1. LONG TERM AVERAGE	4. FLOW b. TOTAL VOLUME *(specify with units)* 2. MAXIMUM DAILY	4. FLOW c. DURATION
001	Dinitrophenol Plant	7	≈ 10	0.002	NA	2000gal	NA	300
001	Toll Custom Mfg.	7	≈ 4	0.003	NA	3000gal	NA	120

III. MAXIMUM PRODUCTION

A. Does an effluent guideline limitation promulgated by EPA under Section 304 of the Clean Water Act apply to your facility?

[X] YES *(complete Item III-B)* [ ] NO *(to to Section IV)*

B. Are the limitations in the applicable effluent guideline expressed in terms of production *(or other measure of operation)*?

[ ] YES *(complete Item III-C)* [X] NO *(go to Section IV)*

C. If you answered "Yes" to Item III-B, list the quantity which represents an actual measurement of your maximum level of production, expressed in the terms and units used in the applicable effluent guideline, and indicate the affected outfalls.

1. MAXIMUM QUANTITY a. QUANTITY PER DAY	b. UNITS OF MEASURE	c. OPERATION, PRODUCT, MATERIAL, ETC. *(specify)*	2. AFFECTED OUTFALLS *(list outfalls)*

IV. IMPROVEMENTS

A. Are you now required by any Federal, State or local authority to meet any implementation schedule for the construction, upgrading or operation of waste water treatment equipment or practices or any other environmental programs which may affect the discharges described in this application? This includes, but is not limited to, permit conditions, administrative or enforcement orders, enforcement compliance schedule letters, stipulations, court orders, and grant or loan conditions.

[X] YES *(complete the following table)* [ ] NO *(go to Item IV-B)*

1. IDENTIFICATION OF CONDITION, AGREEMENT, ETC.	2. AFFECTED OUTFALLS a. NO.	2. AFFECTED OUTFALLS b. SOURCE OF DISCHARGE	3. BRIEF DESCRIPTION OF PROJECT	4. FINAL COMPLIANCE DATE a. REQUIRED	4. FINAL COMPLIANCE DATE b. PROJECTED
RCRA Permit Application/RCRA Reauthorization	001 003	Plantwide	Modify and/or stop use of Outfall 001 treatment system.	Unknown	

B. OPTIONAL: You may attach additional sheets describing any additional water pollution control programs *(or other environmental projects which may affect your discharges)* you now have underway or which you plan. Indicate whether each program is now underway or planned, and indicate your actual or planned schedules for construction. [ ] MARK "X" IF DESCRIPTION OF ADDITIONAL CONTROL PROGRAMS IS ATTACHED

CONTINUE ON PAGE 3

EPA I.D. NUMBER (copy from Item 1 of Form 1)
MSD 990714081

Form Approved OMB No. 158-R0173

V. INTAKE AND EFFLUENT CHARACTERISTICS

A, B, & C: See instructions before proceeding – Complete one set of tables for each outfall – Annotate the outfall number in the space provided. NOTE: Tables V-A, V-B, and V-C are included on separate sheets numbered V-1 through V-9.

D. Use the space below to list any of the pollutants listed in Table 2c-3 of the instructions, which you know or have reason to believe is discharged or may be discharged from any outfall. For every pollutant you list, briefly describe the reasons you believe it to be present and report any analytical data in your possession.

1. POLLUTANT	2. SOURCE	1. POLLUTANT	2. SOURCE
None are known or believed to be present.			

VI. POTENTIAL DISCHARGES NOT COVERED BY ANALYSIS

A. Is any pollutant listed in Item V-C a substance or a component of a substance which you do or expect that you will over the next 5 years use or manufacture as an intermediate or final product or byproduct?

☒ YES *(list all such pollutants below)* ☐ NO *(go to Item VI-B)*

Toluene

Phenols, Total: i.e. 2-secbutyldinitrophenol

B. Are your operations such that your raw materials, processes, or products can reasonably be expected to vary so that your discharges of pollutants may during the next 5 years exceed two times the maximum values reported in Item V?

☐ YES *(complete Item VI-C below)* ☒ NO *(go to Section VII)*

C. If you answered "Yes" to Item VI-B, explain below and describe in detail the sources and expected levels of such pollutants which you anticipate will be discharged from each outfall over the next 5 years, to the best of your ability at this time. Continue on additional sheets if you need more space.

CONTINUED FROM THE FRONT

VII. BIOLOGICAL TOXICITY TESTING DATA

Do you have any knowledge or reason to believe that any biological test for acute or chronic toxicity has been made on any of your discharges or on a receiving water in relation to your discharge within the last 3 years?

☒ YES *(identify the test(s) and describe their purposes below)* ☐ NO *(go to Section VIII)*

Static acute bioassay for determination of 96-hr. LC_{50} required quarterly under current NPDES Permit.

VIII. CONTRACT ANALYSIS INFORMATION

Were any of the analyses reported in Item V performed by a contract laboratory or consulting firm?

☒ YES *(list the name, address, and telephone number of, and pollutants analyzed by, each such laboratory or firm below)* ☐ NO *(go to Section IX)*

A. NAME	B. ADDRESS	C. TELEPHONE *(area code & no.)*	D. POLLUTANTS ANALYZED *(list)*
Enviro-Med Laboratories	414 W. California Ruston, LA 70806	504/928-0232	Item V Parts B and C

IX. CERTIFICATION

I certify under penalty of law that I have personally examined and am familiar with the information submitted in this application and all attachments and that, based on my inquiry of those individuals immediately responsible for obtaining the information, I believe that the information is true, accurate and complete. I am aware that there are significant penalties for submitting false information, including the possibility of fine and imprisonment.

A. NAME & OFFICIAL TITLE *(type or print)*	B. PHONE NO. *(area code & no.)*
C. SIGNATURE	D. DATE SIGNED

Vertac Chemical Corporation
Vicksburg, Plant

ITEM II-A
SCHEMATIC WATER FLOW

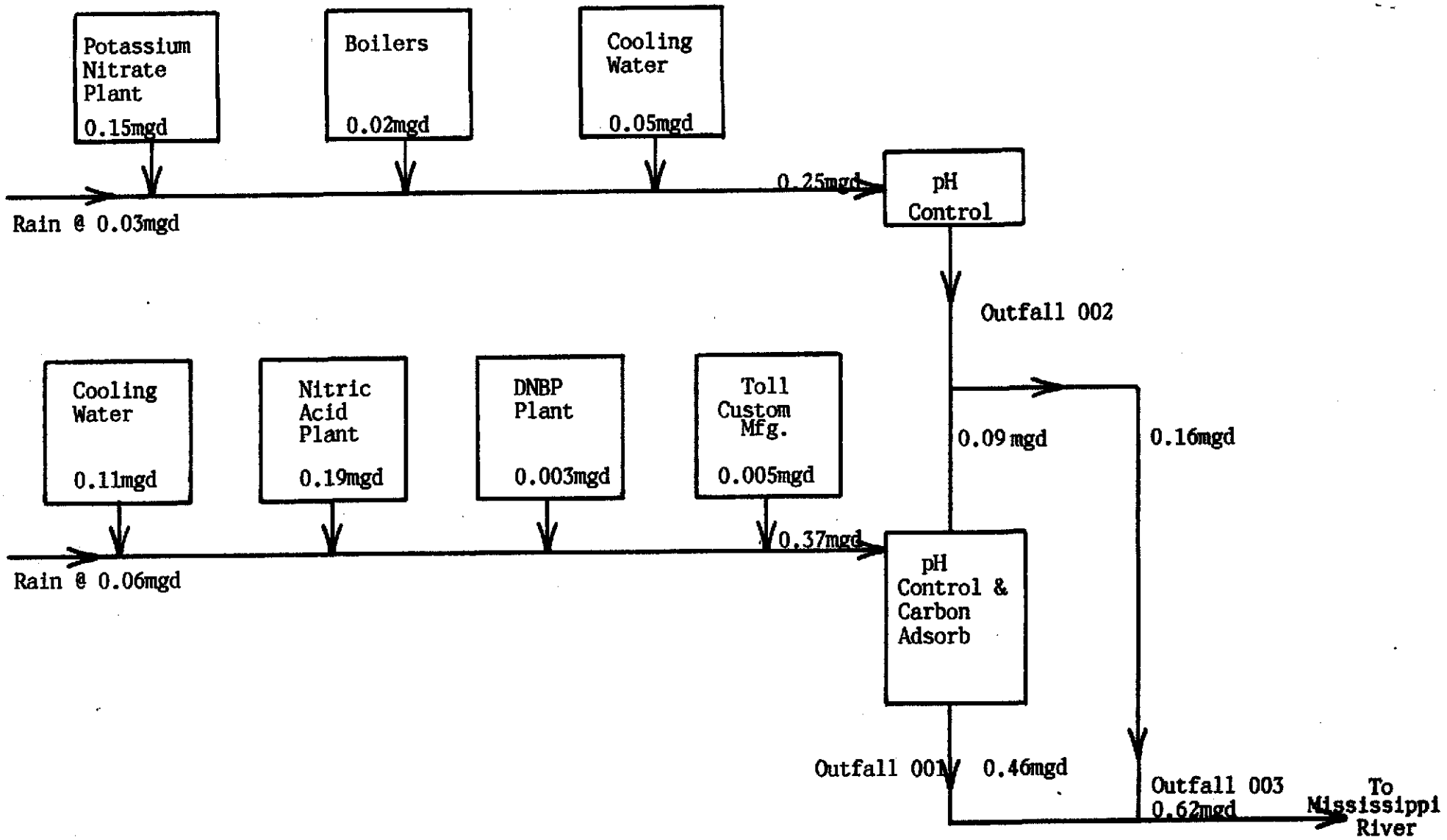

All make-up from municipal water system.

PLEASE PRINT OR TYPE IN THE UNSHADED AREAS ONLY. You may report some or all of this information on separate sheets *(use the same format)* instead of completing these pages. SEE INSTRUCTIONS.

EPA I.D. NUMBER *(copy from Item 1 of Form 1)*: MSD990714081

Form Approved OMB No. 158-R0173

OUTFALL NO. 001

V. INTAKE AND EFFLUENT CHARACTERISTICS *(continued from page 3 of Form 2-C)*

PART A - You must provide the results of at least one analysis for every pollutant in this table. Complete one table for each outfall. See instructions for additional details.

1. POLLUTANT	2. EFFLUENT a. MAXIMUM DAILY VALUE (1) CONCENTRATION	(2) MASS	b. MAXIMUM 30 DAY VALUE *(if available)* (1) CONCENTRATION	(2) MASS	c. LONG TERM AVRG. VALUE *(if available)* (1) CONCENTRATION	(2) MASS	d. NO. OF ANALYSES	3. UNITS *(specify if blank)* a. CONCENTRATION	b. MASS	4. INTAKE *(optional)* a. LONG TERM AVERAGE VALUE (1) CONCENTRATION	(2) MASS	b. NO. OF ANALYSES
a. Biochemical Oxygen Demand *(BOD)*	111	715	38	251	22	94	98	ppm	lbs	NA		
b. Chemical Oxygen Demand *(COD)*	1098	8011	334	1832	88	381	98	"	"	"		
c. Total Organic Carbon *(TOC)*	9.3	60.5	NA	NA	NA	NA	1	"	"	"		
d. Total Suspended Solids *(TSS)*	89	518	38	218	20	86	98	"	"	"		
e. Ammonia *(as N)*	0.49	3.2	NA	NA	NA	NA	1	"	"	"		
f. Flow	VALUE 1.06		VALUE 0.64		VALUE 0.46		98	NA	mgd.	VALUE NA		
g. Temperature *(winter)*	VALUE 9		VALUE NA		VALUE NA		1	°C		VALUE "		
h. Temperature *(summer)*	VALUE NA		VALUE NA		VALUE NA		NA	°C		VALUE "		
i. pH	MINIMUM 7.0	MAXIMUM NA	MINIMUM NA	MAXIMUM NA			1	STANDARD UNITS				

PART B - Mark "X" in column 2-a for each pollutant you know or have reason to believe is present. Mark "X" in column 2-b for each pollutant you believe to be absent. If you mark column 2-a for any pollutant, you must provide the results of at least one analysis for that pollutant. Complete one table for each outfall. See the instructions for additional details and requirements.

1. POLLUTANT AND CAS NO. *(if available)*	2. MARK 'X' a. BELIEVED PRESENT	b. BELIEVED ABSENT	3. EFFLUENT a. MAXIMUM DAILY VALUE (1) CONCENTRATION	(2) MASS	b. MAXIMUM 30 DAY VALUE *(if available)* (1) CONCENTRATION	(2) MASS	c. LONG TERM AVRG. VALUE *(if available)* (1) CONCENTRATION	(2) MASS	d. NO. OF ANALYSES	4. UNITS a. CONCENTRATION	b. MASS	5. INTAKE *(optional)* a. LONG TERM AVERAGE VALUE (1) CONCENTRATION	(2) MASS	b. NO. OF ANALYSES
a. Bromide (24959-67-9)			3.5	22.8					1	ppm	lbs.	NA		
b. Chlorine, Total Residual			53	217					1	"	"	"		
c. Color			20	NA					1	s.u.	"	"		
d. Fecal Coliform			0.0	0.0					1	no.	"	"		
e. Fluoride (16984-48-8)			1.3	8.5					1	"	"	"		
f. Nitrate-Nitrite *(as N)*			689.1	4430					1	"	"	"		

CONTINUE ON REVERSE

ITEM V-B CONTINUED FROM FRONT

1. POLLUTANT AND CAS NO. (If available)	2. MARK 'X' a. BELIEVED PRESENT	b. BELIEVED ABSENT	3. EFFLUENT a. MAXIMUM DAILY VALUE (1) CONCENTRATION	(2) MASS	b. MAXIMUM 30 DAY VALUE (If available) (1) CONCENTRATION	(2) MASS	c. LONG TERM AVRG. VALUE (If available) (1) CONCENTRATION	(2) MASS	d. NO. OF ANALYSES	4. UNITS a. CONCENTRATION	b. MASS	5. INTAKE (optional) a. LONG TERM AVERAGE VALUE (1) CONCENTRATION	(2) MASS	b. NO. OF ANALYSES
g. Nitrogen, Total Organic (as N)			0.36	2.3					1	ppm	lbs	NA		--
h. Oil and Grease			6.7	43.6					1	"	"	"		
i. Phosphorus (as P), Total (7723-14-0)			0.53	3.4					1	"	"	"		
j. Radioactivity														
(1) Alpha, Total		X	NA											
(2) Beta, Total		X	NA											
(3) Radium, Total		X	NA											
(4) Radium 226, Total		X	NA											
k. Sulfate (as SO_4) (14808-79-8)			20.2	131					1	ppm	lbs	NA		
l. Sulfide (as S)			<0.1	< 0.7					1	"	"	"		
m. Sulfite (as SO_3) (14265-45-3)			<2.0	<13					1	"	"	"		
n. Surfactants			1.0	6.5					1	"	"	"		
o. Aluminum, Total (7429-90-5)			0.615	4.0					1	"	"	"		
p. Barium, Total (7440-39-3)			0.049	0.3					1	"	"	"		
q. Boron, Total (7440-42-8)			< 1.0	< 6.5					1	"	"	"		
r. Cobalt, Total (7440-48-4)			<0.2	<1.3					1	"	"	"		
s. Iron, Total (7439-89-6)			0.52	3.4					1	"	"	"		
t. Magnesium, Total (7439-95-4)			12.2	79.4					1	"	"	"		
u. Molybdenum, Total (7439-98-7)			0.213	1.4					1	"	"	"		
v. Manganese, Total (7439-96-5)			0.05	0.3					1	"	"	"		
w. Tin, Total (7440-31-5)			<0.1	<0.7					1	"	"	"		
x. Titanium, Total (7440-32-6)			<0.1	<0.7					1	"	"	"		

 CONTINUE ON PAGE V-3

EPA I.D. NUMBER (copy from Item 1 of Form 1)	OUTFALL NUMBER
MSD990714081	001

Form Approved OMB No. 158-R0173

CONTINUED FROM PAGE 3 OF FORM 2-C

PART C - If you are a primary industry and this outfall contains process wastewater, refer to Table 2c-2 in the instructions to determine which of the GC/MS fractions you must test for. Mark "X" in column 2-a for all such GC/MS fractions that apply to your industry and for ALL toxic metals, cyanides, and total phenols. If you are not required to mark column 2-a *(secondary industries, non-process wastewater outfalls, and non-required GC/MS fractions)*, mark "X" in column 2-b for each pollutant you know or have reason to believe is present. Mark "X" in column 2-c for each pollutant you believe to be absent. If you mark either columns 2-a or 2-b for any pollutant, you must provide the results of at least one analysis for that pollutant. Note that there are seven pages to this part; please review each carefully. Complete one table *(all seven pages)* for each outfall. See instructions for additional details and requirements.

1. POLLUTANT AND CAS NUMBER (If available)	2. MARK 'X'			3. EFFLUENT							4. UNITS		5. INTAKE (optional)		
	a. TESTING REQUIRED	b. BELIEVED PRESENT	c. BELIEVED ABSENT	a. MAXIMUM DAILY VALUE (1) CONCENTRATION	a. MAXIMUM DAILY VALUE (2) MASS	b. MAXIMUM 30 DAY VALUE (If available) (1) CONCENTRATION	b. MAXIMUM 30 DAY VALUE (If available) (2) MASS	c. LONG TERM AVRG. VALUE (If available) (1) CONCENTRATION	c. LONG TERM AVRG. VALUE (If available) (2) MASS	d. NO. OF ANALYSES	a. CONCENTRATION	b. MASS	a. LONG TERM AVERAGE VALUE (1) CONCENTRATION	a. LONG TERM AVERAGE VALUE (2) MASS	b. NO. OF ANALYSES
METALS, CYANIDE, AND TOTAL PHENOLS															
1M. Antimony, Total (7440-36-0)	X			<0.01	<0.07					1	ppm	lbs	NA		
2M. Arsenic, Total (7440-38-2)	X			0.41	2.7					1	"	"	"		
3M. Beryllium, Total, 7440-41-7)	X			<0.002	<0.01					1	"	"	"		
4M. Cadmium, Total (7440-43-9)	X			<0.001	<0.01					1	"	"	"		
5M. Chromium, Total (7440-47-3)	X			0.094	0.6					1	"	"	"		
6M. Copper, Total (7550-50-8)	X			0.016	0.1					1	"	"	"		
7M. Lead, Total (7439-97-6)	X			0.044	0.3					1	"	"	"		
8M. Mercury, Total (7439-97-6)	X			<0.002	<0.01					1	"	"	"		
9M. Nickel, Total (7440-02-0)	X			0.040	0.26					1	"	"	"		
10M. Selenium, Total (7782-49-2)	X			0.10	0.7					1	"	"	"		
11M. Silver, Total (7440-22-4)	X			<0.002	<0.01					1	"	"	"		
12M. Thallium, Total (7440-28-0)	X			<0.01	<0.07					1	"	"	"		
13M. Zinc, Total (7440-66-6)	X			0.03	0.2					1	"	"	"		
14M. Cyanide, Total (57-12-5)	X			<0.01	<0.07					1	"	"	"		
15M. Phenols, Total	X			<0.05	<0.3					1	"	"	"		
DIOXIN															
2,3,7,8-Tetrachlorodibenzo-P-Dioxin (1764-01-6)			X	DESCRIBE RESULTS											

CONTINUE ON REVERSE

1. POLLUTANT AND CAS NUMBER (if available)	2. MARK "X" a. TESTING REQUIRED	b. BELIEVED PRESENT	c. BELIEVED ABSENT	3. EFFLUENT a. MAXIMUM DAILY VALUE (1) CONCENTRATION	(2) MASS	b. MAXIMUM 30 DAY VALUE (if available) (1) CONCENTRATION	(2) MASS	c. LONG TERM AVRG. VALUE (if available) (1) CONCENTRATION	(2) MASS	d. NO. OF ANALYSES	4. UNITS a. CONCENTRATION	b. MASS	5. INTAKE (optional) a. LONG TERM AVERAGE VALUE (1) CONCENTRATION	(2) MASS	b. NO. OF ANALYSES
GC/MS FRACTION – VOLATILE COMPOUNDS															
1V. Acrolein (107-02-8)	X			<0.01	NA					1	PPM		NA		
2V. Acrylonitrile (107-13-1)	X			"	"					1	"		"		
3V. Benzene (71-43-2)	X			"	"					1	"		"		
4V. Bis (Chloromethyl) Ether (542-88-1)	X			"	"					1	"		"		
5V. Bromoform (75-25-2)	X			"	"					1	"		"		
6V. Carbon Tetrachloride (56-23-5)	X			"	"					1	"		"		
7V. Chlorobenzene (108-90-7)	X			"	"					1	"		"		
8V. Chlorodibromomethane (124-48-1)	X			0.02	0.1					1	PPM	lbs	NA		
9V. Chloroethane (75-00-3)	X			<0.01	NA					1	"		"		
10V. 2-Chloroethylvinyl Ether (110-75-8)	X			"	"					1	"		"		
11V. Chloroform (67-66-3)	X			0.38	2.5					1	PPM	lbs	NA		
12V. Dichlorobromomethane (75-27-4)	X			0.04	0.3					1	PPM	lbs	NA		
13V. Dichlorodifluoromethane (75-71-8)	X			<0.01	NA					1	"		"		
14V. 1,1-Dichloroethane (75-34-3)	X			"	"					1	"		"		
15V. 1,2-Dichloroethane (107-06-2)	X			"	"					1	"		"		
16V. 1,1-Dichloroethylene (75-35-4)	X			"	"					1	"		"		
17V. 1,2-Dichloropropane (78-87-5)	X			"	"					1	"		"		
18V. 1,2-Dichloropropylene (542-75-6)	X			"	"					1	"		"		
19V. Ethylbenzene (100-41-4)	X			"	"					1	"		"		
20V. Methyl Bromide (74-83-9)	X			"	"					1	"		"		
21V. Methyl Chloride (74-87-3)	X			"	"					1	"		"		

CONTINUE ON PAGE V-5

EPA I.D. NUMBER (copy from Item 1 of Form 1): MSD990714081

OUTFALL NUMBER: 001

Form Approved OMB No. 158-R0173

1. POLLUTANT AND CAS NUMBER (if available)	2. MARK 'X' a. TESTING REQUIRED	b. BELIEVED PRESENT	c. BELIEVED ABSENT	3. EFFLUENT a. MAXIMUM DAILY VALUE (1) CONCENTRATION	(2) MASS	b. MAXIMUM 30 DAY VALUE (if available) (1) CONCENTRATION	(2) MASS	c. LONG TERM AVRG. VALUE (if available) (1) CONCENTRATION	(2) MASS	d. NO. OF ANALYSES	4. UNITS a. CONCENTRATION	b. MASS	5. [illegible]KE (optional) a. LONG TERM AVERAGE VALUE (1) CONCENTRATION	(2) MASS	b. NO. OF ANALYSES
GC/MS FRACTION – VOLATILE COMPOUNDS *(continued)*															
22V. Methylene Chloride (75-09-2)	X			<0.01						1	PPM		NA		
23V. 1,1,2,2-Tetrachloroethane (79-34-5)	X			"						1	"		"		
24V. Tetrachloroethylene (127-18-4)	X			"						1	"		"		
25V. Toluene (108-88-3)	X			"						1	"		"		
26V. 1,2-Trans-Dichloroethylene (156-60-5)	X			"						1	"		"		
27V. 1,1,1-Trichloroethane (71-55-6)	X			"						1	"		"		
28V. 1,1,2-Trichloroethane (79-00-5)	X			"						1	"		"		
29V. Trichloroethylene (79-01-6)	X			"						1	"		"		
30V. Trichlorofluoromethane (75-69-4)	X			"						1	"		"		
31V. Vinyl Chloride (75-01-4)	X			"						1	"		"		
GC/MS FRACTION – ACID COMPOUNDS															
1A. 2-Chlorophenol (95-57-8)	X			<0.025						1	PPM		"		
2A. 2,4-Dichlorophenol (120-83-2)	X			"						1	"		"		
3A. 2,4-Dimethylphenol (105-67-9)	X			"						1	"		"		
4A. 4,6-Dinitro-O-Cresol (534-52-1)	X			<0.05						1	"		"		
5A. 2,4-Dinitrophenol (51-28-5)	X			<0.05						1	"		"		
6A. 2-Nitrophenol (88-75-5)	X			<0.025						1	"		"		
7A. 4-Nitrophenol (100-02-7)	X			"						1	"		"		
8A. P-Chloro-M-Cresol (59-50-7)	X			"						1	"		"		
9A. Pentachlorophenol (87-86-5)	X			"						1	"		"		
10A. Phenol (108-95-2)	X			"						1	"		"		
11A. 2,4,6-Trichlorophenol (88-06-2)	X			"						1	"		"		

CONTINUE ON REVERSE

1. POLLUTANT AND CAS NUMBER (if available)	2. MARK 'X' a. TESTING REQUIRED	b. BELIEVED PRESENT	c. BELIEVED ABSENT	3. EFFLUENT a. MAXIMUM DAILY VALUE (1) CONCENTRATION	(2) MASS	b. MAXIMUM 30 DAY VALUE (if available) (1) CONCENTRATION	(2) MASS	c. LONG TERM AVRG. VALUE (if available) (1) CONCENTRATION	(2) MASS	d. NO. OF ANALYSES	4. UNITS a. CONCENTRATION	b. MASS	5. INTAKE (optional) a. LONG TERM AVERAGE VALUE (1) CONCENTRATION	(2) MASS	b. NO. OF ANALYSES
GC/MS FRACTION – BASE/NEUTRAL COMPOUNDS															
1B. Acenaphthene (83-32-9)	X			<0.01						1	ppm		NA		
2B. Acenaphtylene (208-96-8)	X			"						1	"		"		
3B. Anthracene (120-12-7)	X			"						1	"		"		
4B. Benzidine (92-87-5)	X			"						1	"		"		
5B. Benzo (a) Anthracene (56-55-3)	X			"						1	"		"		
6B. Benzo (a) Pyrene (50-32-8)	X			<0.025						1	"		"		
7B. 3,4-Benzo-fluoranthene (205-99-2)	X			<0.01						1	"		"		
8B. Benzo (ghi) Perylene (191-24-2)	X			"						1	"		"		
9B. Benzo (k) Fluoranthene (207-08-9)	X			"						1	"		"		
10B. Bis (2-Chloro-ethoxy) Methane (111-91-1)	X			"						1	"		"		
11B. Bis (2-Chloro-ethyl) Ether (111-44-4)	X			"						1	"		"		
12B. Bis (2-Chloro-isopropyl) Ether (39638-32-9)	X			"						1	"		"		
13B. Bis (2-Ethyl-hexyl) Phthalate (117-81-7)	X			"						1	"		"		
14B. 4-Bromo-phenyl Phenyl Ether (101-55-3)	X			"						1	"		"		
15B. Butyl Benzyl Phthalate (85-68-7)	X			"						1	"		"		
16B. 2-Chloro-naphthalene (91-58-7)	X			"						1	"		"		
17B. 4-Chloro-phenyl Phenyl Ether (7005-72-3)	X			"						1	"		"		
18B. Chrysene (218-01-9)	X			"						1	"		"		
19B. Dibenzo (a,h) Anthracene (53-70-3)	X			<0.025						1	"		"		
20B. 1,2-Dichloro-benzene (95-50-1)	X			<0.01						1	"		"		
21B. 1,3-Dichloro-benzene (541-73-1)	X			"						1	"		"		

CONTINUE ON PAGE V-7

EPA I.D. NUMBER (copy from Item 1 of Form 1)	OUTFALL NUMBER
MSD990714081	001

Form Approved O[illegible]o. 158-R0173

CONTINUED FROM PAGE V-6

1. POLLUTANT AND CAS NUMBER (if available)	2. MARK 'X' a. TESTING REQUIRED	b. BELIEVED PRESENT	c. BELIEVED ABSENT	3. EFFLUENT a. MAXIMUM DAILY VALUE (1) CONCENTRATION	(2) MASS	b. MAXIMUM 30 DAY VALUE (if available) (1) CONCENTRATION	(2) MASS	c. LONG TERM AVRG. VALUE (if available) (1) CONCENTRATION	(2) MASS	d. NO. OF ANALYSES	4. UNITS a. CONCENTRATION	b. MASS	5. INTAKE (optional) a. LONG TERM AVERAGE VALUE (1) CONCENTRATION	(2) MASS	b. NO. OF ANALYSES
GC/MS FRACTION – BASE/NEUTRAL COMPOUNDS *(continued)*															
22B. 1,4-Dichlorobenzene (106-46-7)	X			<0.01						1	ppm		NA		
23B. 3,3'-Dichlorobenzidine (91-94-1)	X			"						1	"		"		
24B. Diethyl Phthalate (84-66-2)	X			"						1	"		"		
25B. Dimethyl Phthalate (131-11-3)	X			"						1	"		"		
26B. Di-N-Butyl Phthalate (84-74-2)	X			"						1	"		"		
27B. 2,4-Dinitrotoluene (121-14-2)	X			"						1	"		"		
28B. 2,6-Dinitrotoluene (606-20-2)	X			"						1	"		"		
29B. Di-N-Octyl Phthalate (117-84-0)	X			"						1	"		"		
30B. 1,2-Diphenylhydrazine *(as Azobenzene)* (122-66-7)	X			"						1	"		"		
31B. Fluoranthene (206-44-0)	X			"						1	"		"		
32B. Fluorene (86-73-7)	X			"						1	"		"		
33B. Hexachlorobenzene (118-71-1)	X			"						1	"		"		
34B. Hexachlorobutadiene (87-68-3)	X			"						1	"		"		
35B. Hexachlorocyclopentadiene (77-47-4)	X			"						1	"		"		
36B. Hexachloroethane (67-72-1)	X			"						1	"		"		
37B. Indeno *(1,2,3-cd)* Pyrene (193-39-5)	X			<0.025						1	"		"		
38B. Isophorone (78-59-1)	X			<0.01						1	"		"		
39B. Naphthalene (91-20-3)	X			"						1	"		"		
40B. Nitrobenzene (98-95-3)	X			"						1	"		"		
41B. N-Nitrosodimethylamine (62-75-9)	X			"						1	"		"		
42B. N-Nitrosodi-N-Propylamine (621-64-7)	X			"						1	"		"		

CONTINUE ON REVERSE

CONTINUED FROM THE FRONT

1. POLLUTANT AND CAS NUMBER (if available)	2. MARK 'X' a. TESTING REQUIRED	b. BELIEVED PRESENT	c. BELIEVED ABSENT	3. EFFLUENT a. MAXIMUM DAILY VALUE (1) CONCENTRATION	(2) MASS	b. MAXIMUM 30 DAY VALUE (if available) (1) CONCENTRATION	(2) MASS	c. LONG TERM AVRG. VALUE (if available) (1) CONCENTRATION	(2) MASS	d. NO. OF ANALYSES	4. UNITS a. CONCENTRATION	b. MASS	5. INTAKE (optional) a. LONG TERM AVERAGE VALUE (1) CONCENTRATION	(2) MASS	b. NO. OF ANALYSES
GC/MS FRACTION – BASE/NEUTRAL COMPOUNDS *(continued)*															
43B. N-Nitrosodiphenylamine (86-30-6)	X			<0.01						1	ppm		NA		
44B. Phenanthrene (85-01-8)	X			"						1	"		"		
45B. Pyrene (129-00-0)	X			"						1	"		"		
46B. 1,2,4-Trichlorobenzene (120-82-1)	X			"						1	"		"		
GC/MS FRACTION – PESTICIDES															
1P. Aldrin (309-00-2)	X			<0.01						1	"		"		
2P. α-BHC (319-84-6)	X			"						1	"		"		
3P. β-BHC (319-85-7)	X			"						1	"		"		
4P. γ-BHC (58-89-9)	X			"						1	"		"		
5P. δ-BHC (319-86-8)	X			"						1	"		"		
6P. Chlordane (57-74-9)	X			"						1	"		"		
7P. 4,4'-DDT (50-29-3)	X			"						1	"		"		
8P. 4,4'-DDE (72-55-9)	X			"						1	"		"		
9P. 4,4'-DDD (72-54-8)	X			"						1	"		"		
10P. Dieldrin (60-57-1)	X			"						1	"		"		
11P. α-Endosulfan (115-29-7)	X			"						1	"		"		
12P. β-Endosulfan (115-29-7)	X			"						1	"		"		
13P. Endosulfan Sulfate (1031-07-8)	X			"						1	"		"		
14P. Endrin (72-20-8)	X			"						1	"		"		
15P. Endrin Aldehyde (7421-93-4)	X			"						1	"		"		
16P. Heptachlor (76-44-8)	X			"						1	"		"		

 CONTINUE ON PAGE V-9

EPA I.D. NUMBER (copy from Item 1 of Form 1)	OUTFALL NUMBER
MSD990714081	001

Form Approved OMB No. 158-R0173

CONTINUED FROM PAGE V-8

1. POLLUTANT AND CAS NUMBER (if available)	2. MARK 'X' a. TESTING REQUIRED	b. BELIEVED PRESENT	c. BELIEVED ABSENT	3. EFFLUENT a. MAXIMUM DAILY VALUE (1) CONCENTRATION	(2) MASS	b. MAXIMUM 30 DAY VALUE (if available) (1) CONCENTRATION	(2) MASS	c. LONG TERM AVRG. VALUE (if available) (1) CONCENTRATION	(2) MASS	d. NO. OF ANALYSES	4. UNITS a. CONCENTRATION	b. MASS	5. INTAKE (optional) a. LONG TERM AVERAGE VALUE (1) CONCENTRATION	(2) MASS	b. NO. OF ANALYSES
GC/MS FRACTION – PESTICIDES *(continued)*															
17P. Heptachlor Epoxide (1024-57-3)	X			<0.01						1	ppm		NA		
18P. PCB-1242 (53469-21-9)	X			"						1	"		"		
19P. PCB-1254 (11097-69-1)	X			"						1	"		"		
20P. PCB-1221 (11104-28-2)	X			"						1	"		"		
21P. PCB-1232 (11141-16-5)	X			"						1	"		"		
22P. PCB-1248 (12672-29-6)	X			"						1	"		"		
23P. PCB-1260 (11096-82-5)	X			"						1	"		"		
24P. PCB-1016 (12674-11-2)	X			"						1	"		"		
25P. Toxaphene (8001-35-2)	X			"						1	"		"		

PLEASE PRINT OR TYPE IN THE UNSHADED AREAS ONLY. You may report some or all of this information on separate sheets *(use the same format)* instead of completing these pages. SEE INSTRUCTIONS.

EPA I.D. NUMBER *(copy from Item 1 of Form 1)*: MSD990714081

Form Approved OMB No. 158-R0173

OUTFALL NO.: 002

V. INTAKE AND EFFLUENT CHARACTERISTICS *(continued from page 3 of Form 2-C)*

PART A - You must provide the results of at least one analysis for every pollutant in this table. Complete one table for each outfall. See instructions for additional details.

1. POLLUTANT	2. EFFLUENT a. MAXIMUM DAILY VALUE (1) CONCENTRATION	(2) MASS	b. MAXIMUM 30 DAY VALUE *(if available)* (1) CONCENTRATION	(2) MASS	c. LONG TERM AVRG. VALUE *(if available)* (1) CONCENTRATION	(2) MASS	d. NO. OF ANALYSES	3. UNITS *(specify if blank)* a. CONCENTRATION	b. MASS	4. INTAKE *(optional)* a. LONG TERM AVERAGE VALUE (1) CONCENTRATION	(2) MASS	b. NO. OF ANALYSES
a. Biochemical Oxygen Demand *(BOD)*	<1.0	<1.6	NA	NA	NA	NA	1	ppm	lbs	NA		
b. Chemical Oxygen Demand *(COD)*	<3.7	<5.9	"	"	"	"	1	"	"	"		
c. Total Organic Carbon *(TOC)*	3.5	5.5	"	"	"	"	1	"	"	"		
d. Total Suspended Solids *(TSS)*	19.0	30.1	"	"	"	"	1	"	"	"		
e. Ammonia *(as N)*	0.19	0.3	"	"	"	"	1	"	"	"		
f. Flow	VALUE 0.45		VALUE 0.44		VALUE 0.25		170	NA	mgd	VALUE NA		
g. Temperature *(winter)*	VALUE 14		VALUE NA		VALUE NA		1	°C		VALUE		
h. Temperature *(summer)*	VALUE NA		VALUE NA		VALUE NA		NA	°C		VALUE		
i. pH	MINIMUM 6.3	MAXIMUM NA	MINIMUM NA	MAXIMUM NA			1	STANDARD UNITS				

PART B - Mark "X" in column 2-a for each pollutant you know or have reason to believe is present. Mark "X" in column 2-b for each pollutant you believe to be absent. If you mark column 2-a for any pollutant, you must provide the results of at least one analysis for that pollutant. Complete one table for each outfall. See the instructions for additional details and requirements.

1. POLLUTANT AND CAS NO. *(if available)*	2. MARK 'X' a. BELIEVED PRESENT	b. BELIEVED ABSENT	3. EFFLUENT a. MAXIMUM DAILY VALUE (1) CONCENTRATION	(2) MASS	b. MAXIMUM 30 DAY VALUE *(if available)* (1) CONCENTRATION	(2) MASS	c. LONG TERM AVRG. VALUE *(if available)* (1) CONCENTRATION	(2) MASS	d. NO. OF ANALYSES	4. UNITS a. CONCENTRATION	b. MASS	5. INTAKE *(optional)* a. LONG TERM AVERAGE VALUE (1) CONCENTRATION	(2) MASS	b. NO. OF ANALYSES
a. Bromide (24959-67-9)			1.7	2.7					1	ppm	lbs	NA		
b. Chlorine, Total Residual			355	650					1	"	"	"		
c. Color			10	NA					1	"	"	"		
d. Fecal Coliform			0.0	0					1	"	"	"		
e. Fluoride (16984-48-8)			1.3	2.1					1	"	"	"		
f. Nitrate-Nitrite *(as N)*			961.1	1523					1	"	"	"		

CONTINUE ON REVERSE

ITEM V-B CONTINUED FROM FRONT 002

1. POLLUTANT AND CAS NO. (if available)	2. MARK 'X' a. BELIEVED PRESENT	b. BELIEVED ABSENT	3. EFFLUENT a. MAXIMUM DAILY VALUE (1) CONCENTRATION	(2) MASS	b. MAXIMUM 30 DAY VALUE (if available) (1) CONCENTRATION	(2) MASS	c. LONG TERM AVRG. VALUE (if available) (1) CONCENTRATION	(2) MASS	d. NO. OF ANALYSES	4. UNITS a. CONCENTRATION	b. MASS	5. INTAKE (optional) a. LONG TERM AVERAGE VALUE (1) CONCENTRATION	(2) MASS	b. NO. OF ANALYSES
g. Nitrogen, Total Organic (as N)			1.1	1.7					1	ppm	lbs	NA		
h. Oil and Grease			5.3	8.4					1	"	"	"		
i. Phosphorus (as P), Total (7723-14-0)			0.26	0.4					1	"	"	"		
j. Radioactivity														
(1) Alpha, Total		X	NA									"		
(2) Beta, Total		X	NA									"		
(3) Radium, Total		X	NA									"		
(4) Radium 226, Total		X	NA									"		
k. Sulfate (as SO_4) (14808-79-8)			25.5	40.4					1	ppm	lbs	"		
l. Sulfide (as S)			<0.1	<0.2					1	"		"		
m. Sulfite (as SO_3) (14265-45-3)			82.0	130					1	"		"		
n. Surfactants			0.7	1.1					1	"		"		
o. Aluminum, Total (7429-90-5)			0.615	0.97					1	"		"		
p. Barium, Total (7440-39-3)			0.042	0.07					1	"		"		
q. Boron, Total (7440-42-8)			<1.0	<1.6					1	"		"		
r. Cobalt, Total (7440-48-4)			<0.2	<0.3					1	"		"		
s. Iron, Total (7439-89-6)			1.22	1.9					1	"		"		
t. Magnesium, Total (7439-95-4)			13.5	21.4					1	"		"		
u. Molybdenum, Total (7439-98-7)			0.221	0.35					1	"		"		
v. Manganese, Total (7439-96-5)			0.05	0.08					1	"		"		
w. Tin, Total (7440-31-5)			<0.1	<0.2					1	"		"		
x. Titanium, Total (7440-32-6)			<0.1	<0.2					1	"		"		

EPA Form 3510-2C (6-80)

CONTINUE ON PAGE V-3

EPA I.D. NUMBER (copy from Item I of Form 1)	OUTFALL NUMBER
MSD990714081	002

Form Approved OMB No. 158-R0173

CONTINUED FROM PAGE 3 OF FORM 2-C

PART C - If you are a primary industry and this outfall contains process wastewater, refer to Table 2c-2 in the instructions to determine which of the GC/MS fractions you must test for. Mark "X" in column 2-a for all such GC/MS fractions that apply to your industry and for ALL toxic metals, cyanides, and total phenols. If you are not required to mark column 2-a *(secondary industries, non-process wastewater outfalls, and non-required GC/MS fractions)*, mark "X" in column 2-b for each pollutant you know or have reason to believe is present. Mark "X" in column 2-c for each pollutant you believe to be absent. If you mark either columns 2-a or 2-b for any pollutant, you must provide the results of at least one analysis for that pollutant. Note that there are seven pages to this part; please review each carefully. Complete one table *(all seven pages)* for each outfall. See instructions for additional details and requirements.

1. POLLUTANT AND CAS NUMBER (If available)	2. MARK 'X'			3. EFFLUENT							4. UNITS		5. INTAKE (optional)		
	a. TESTING REQUIRED	b. BELIEVED PRESENT	c. BELIEVED ABSENT	a. MAXIMUM DAILY VALUE (1) CONCENTRATION	a. MAXIMUM DAILY VALUE (2) MASS	b. MAXIMUM 30 DAY VALUE (if available) (1) CONCENTRATION	b. MAXIMUM 30 DAY VALUE (if available) (2) MASS	c. LONG TERM AVRG. VALUE (if available) (1) CONCENTRATION	c. LONG TERM AVRG. VALUE (if available) (2) MASS	d. NO. OF ANALYSES	a. CONCENTRATION	b. MASS	a. LONG TERM AVERAGE VALUE (1) CONCENTRATION	a. LONG TERM AVERAGE VALUE (2) MASS	b. NO. OF ANALYSES
METALS, CYANIDE, AND TOTAL PHENOLS															
1M. Antimony, Total (7440-36-0)	X			<0.01	<0.02					1	ppm	lbs	NA		
2M. Arsenic, Total (7440-38-2)	X			0.01	0.02					1	"	"	"		
3M. Beryllium, Total, 7440-41-7)	X			<0.002	<0.003					1	"	"	"		
4M. Cadmium, Total (7440-43-9)	X			<0.001	<0.002					1	"	"	"		
5M. Chromium, Total (7440-47-3)	X			0.12	0.2					1	"	"	"		
6M. Copper, Total (7550-50-8)	X			0.012	0.02					1	"	"	"		
7M. Lead, Total (7439-97-6)	X			0.021	0.03					1	"	"	"		
8M. Mercury, Total (7439-97-6)	X			<0.002	<0.003					1	"	"	"		
9M. Nickel, Total (7440-02-0)	X			<0.005	<0.008					1	"	"	"		
10M. Selenium, Total (7782-49-2)	X			0.069	0.11					1	"	"	"		
11M. Silver, Total (7440-22-4)	X			<0.002	<0.003					1	"	"	"		
12M. Thallium, Total (7440-28-0)	X			<0.01	<0.02					1	"	"	"		
13M. Zinc, Total (7440-66-6)	X			0.03	0.05					1	"	"	"		
14M. Cyanide, Total (57-12-5)	X			<0.01	<0.02					1	"	"	"		
15M. Phenols, Total	X			<0.05	<0.08					1	"	"	"		
DIOXIN															
2,3,7,8-Tetrachlorodibenzo-P-Dioxin (1764-01-6)			X	DESCRIBE RESULTS											

CONTINUE ON REVERSE

1. POLLUTANT AND NUMBER (if available)	2. MARK 'X' a. TESTING REQUIRED	b. BELIEVED PRESENT	c. BELIEVED ABSENT	3. EFFLUENT a. MAXIMUM DAILY VALUE (1) CONCENTRATION	(2) MASS	b. MAXIMUM 30 DAY VALUE (if available) (1) CONCENTRATION	(2) MASS	c. LONG TERM AVRG. VALUE (if available) (1) CONCENTRATION	(2) MASS	d. NO. OF ANALYSES	4. UNITS a. CONCENTRATION	b. MASS	INTAKE (optional) a. LONG TERM AVRG. VALUE (1) CONCENTRATION	(2) MASS	b. NO. OF ANALYSES
GC/MS FRACTION – VOLATILE COMPOUNDS															
1V. Acrolein (107-02-8)	X			<0.01	NA					1	PPM		NA		
2V. Acrylonitrile (107-13-1)	X			"	"					1	"		"		
3V. Benzene (71-43-2)	X			"	"					1	"		"		
4V. Bis (Chloromethyl) Ether (542-88-1)	X			"	"					1	"		"		
5V. Bromoform (75-25-2)	X			0.024	0.04					1	"	lbs	"		
6V. Carbon Tetrachloride (56-23-5)	X			<0.01	NA					1	"		"		
7V. Chlorobenzene (108-90-7)	X			"	"					1	"		"		
8V. Chlorodibromomethane (124-48-1)	X			0.025	0.04					1	"	lbs	"		
9V. Chloroethane (75-00-3)	X			<0.01	NA					1	"		"		
10V. 2-Chloroethylvinyl Ether (110-75-8)	X			"	"					1	"		"		
11V. Chloroform (67-66-3)	X			0.46	0.73					1	"	lbs	"		
12V. Dichlorobromomethane (75-27-4)	X			0.01	0.02					1	"	lbs	"		
13V. Dichlorodifluoromethane (75-71-8)	X			<0.01	NA					1	"		"		
14V. 1,1-Dichloroethane (75-34-3)	X			"	"					1	"		"		
15V. 1,2-Dichloroethane (107-06-2)	X			"	"					1	"		"		
16V. 1,1-Dichloroethylene (75-35-4)	X			"	"					1	"		"		
17V. 1,2-Dichloropropane (78-87-5)	X			"	"					1	"		"		
18V. 1,2-Dichloropropylene (542-75-6)	X			"	"					1	"		"		
19V. Ethylbenzene (100-41-4)	X			"	"					1	"		"		
20V. Methyl Bromide (74-83-9)	X			"	"					1	"		"		
21V. Methyl Chloride (74-87-3)	X			"	"					1	"		"		

CONTINUE ON PAGE V-

EPA I.D. NUMBER (copy from Item 1 of Form 1): MSD990714081

OUTFALL NUMBER: 002

Form Approved OMB No. 158-R0173

1. POLLUTANT AND CAS NUMBER (if available)	2. MARK 'X' a. TESTING REQUIRED	b. BELIEVED PRESENT	c. BELIEVED ABSENT	3. EFFLUENT a. MAXIMUM DAILY VALUE (1) CONCENTRATION	(2) MASS	b. MAXIMUM 30 DAY VALUE (if available) (1) CONCENTRATION	(2) MASS	c. LONG TERM AVRG. VALUE (if available) (1) CONCENTRATION	(2) MASS	d. NO. OF ANALYSES	4. UNITS a. CONCENTRATION	b. MASS	5. INTAKE (optional) a. LONG TERM AVERAGE VALUE (1) CONCENTRATION	(2) MASS	b. NO. OF ANALYSES
GC/MS FRACTION – VOLATILE COMPOUNDS *(continued)*															
22V. Methylene Chloride (75-09-2)	X			<0.01						1	ppm		NA		
23V. 1,1,2,2-Tetrachloroethane (79-34-5)	X			"						1	"		"		
24V. Tetrachloroethylene (127-18-4)	X			"						1	"		"		
25V. Toluene (108-88-3)	X			"						1	"		"		
26V. 1,2-Trans-Dichloroethylene (156-60-5)	X			"						1	"		"		
27V. 1,1,1-Trichloroethane (71-55-6)	X			"						1	"		"		
28V. 1,1,2-Trichloroethane (79-00-5)	X			"						1	"		"		
29V. Trichloroethylene (79-01-6)	X			"						1	"		"		
30V. Trichlorofluoromethane (75-69-4)	X			"						1	"		"		
31V. Vinyl Chloride (75-01-4)	X			"						1	"		"		
GC/MS FRACTION – ACID COMPOUNDS															
1A. 2-Chlorophenol (95-57-8)	X			<0.025						1	"		"		
2A. 2,4-Dichlorophenol (120-83-2)	X			"						1	"		"		
3A. 2,4-Dimethylphenol (105-67-9)	X			"						1	"		"		
4A. 4,6-Dinitro-O-Cresol (534-52-1)	X			<0.05						1	"		"		
5A. 2,4-Dinitrophenol (51-28-5)	X			<0.05						1	"		"		
6A. 2-Nitrophenol (95-75-5)	X			<0.025						1	"		"		
7A. 4-Nitrophenol (100-02-7)	X			"						1	"		"		
8A. P-Chloro-M-Cresol (59-50-7)	X			"						1	"		"		
9A. Pentachlorophenol (87-86-5)	X			"						1	"		"		
10A. Phenol (108-95-2)	X			"						1	"		"		
11A. 2,4,6-Trichlorophenol (88-06-2)	X			"						1	"		"		

CONTINUE ON REVERSE

1. POLLUTANT AND CAS NUMBER (if available)	2. MARK 'X' a. TESTING REQUIRED	b. BELIEVED PRESENT	c. BELIEVED ABSENT	3. EFFLUENT a. MAXIMUM DAILY VALUE (1) CONCENTRATION	(2) MASS	b. MAXIMUM 30 DAY VALUE (if available) (1) CONCENTRATION	(2) MASS	c. LONG TERM AVRG. VALUE (if available) (1) CONCENTRATION	(2) MASS	d. NO. OF ANALYSES	4. UNITS a. CONCENTRATION	b. MASS	5. INTAKE (optional) a. LONG TERM AVERAGE VALUE (1) CONCENTRATION	(2) MASS	b. NO. OF ANALYSES
GC/MS FRACTION – BASE/NEUTRAL COMPOUNDS															
1B. Acenaphthene (83-32-9)	X			<0.01						1	PPM		NA		
2B. Acenaphtylene (208-96-8)	X			"						1	"		"		
3B. Anthracene (120-12-7)	X			"						1	"		"		
4B. Benzidine (92-87-5)	X			"						1	"		"		
5B. Benzo (a) Anthracene (56-55-3)	X			"						1	"		"		
6B. Benzo (a) Pyrene (50-32-8)	X			<0.025						1	"		"		
7B. 3,4-Benzo-fluoranthene (205-99-2)	X			<0.01						1	"		"		
8B. Benzo (ghi) Perylene (191-24-2)	X			"						1	"		"		
9B. Benzo (k) Fluoranthene (207-08-9)	X			"						1	"		"		
10B. Bis (2-Chloro-ethoxy) Methane (111-91-1)	X			"						1	"		"		
11B. Bis (2-Chloro-ethyl) Ether (111-44-4)	X			"						1	"		"		
12B. Bis (2-Chloro-isopropyl) Ether (39638-32-9)	X			"						1	"		"		
13B. Bis (2-Ethyl-hexyl) Phthalate (117-81-7)	X			"						1	"		"		
14B. 4-Bromo-phenyl Phenyl Ether (101-55-3)	X			"						1	"		"		
15B. Butyl Benzyl Phthalate (85-68-7)	X			"						1	"		"		
16B. 2-Chloro-naphthalene (91-58-7)	X			"						1	"		"		
17B. 4-Chloro-phenyl Phenyl Ether (7005-72-3)	X			"						1	"		"		
18B. Chrysene (218-01-9)	X			"						1	"		"		
19B. Dibenzo (a,h) Anthracene (53-70-3)	X			<0.025						1	"		"		
20B. 1,2-Dichloro-benzene (95-50-1)	X			<0.01						1	"		"		
21B. 1,3-Dichloro-benzene (541-73-1)	X			"						1	"		"		

CONTINUE ON PAGE V-7

CONTINUED FROM PAGE V-6

EPA I.D. NUMBER (copy from Item 1 of Form 1)	OUTFALL NUMBER
MSD990714081	002

Form Approved O[illegible] 158-R0173

1. POLLUTANT AND CAS NUMBER (if available)	2. MARK 'X' a. TESTING REQUIRED	b. BELIEVED PRESENT	c. BELIEVED ABSENT	3. EFFLUENT a. MAXIMUM DAILY VALUE (1) CONCENTRATION	(2) MASS	b. MAXIMUM 30 DAY VALUE (if available) (1) CONCENTRATION	(2) MASS	c. LONG TERM AVERG. VALUE (if available) (1) CONCENTRATION	(2) MASS	d. NO. OF ANALYSES	4. UNITS a. CONCENTRATION	b. MASS	5. INTAKE (optional) a. LONG TERM AVERAGE VALUE (1) CONCENTRATION	(2) MASS	b. NO. OF ANALYSES
GC/MS FRACTION – BASE/NEUTRAL COMPOUNDS *(continued)*															
22B. 1,4-Dichlorobenzene (106-46-7)	X			<0.01						1	PPM	.	NA		
23B. 3,3'-Dichlorobenzidine (91-94-1)	X			"						1	"		"		
24B. Diethyl Phthalate (84-66-2)	X			"						1	"		"		
25B. Dimethyl Phthalate (131-11-3)	X			"						1	"		"		
26B. Di-N-Butyl Phthalate (84-74-2)	X			"						1	"		"		
27B. 2,4-Dinitrotoluene (121-14-2)	X			"						1	"		"		
28B. 2,6-Dinitrotoluene (606-20-2)	X			"						1	"		"		
29B. Di-N-Octyl Phthalate (117-84-0)	X			"						1	"		"		
30B. 1,2-Diphenylhydrazine *(as Azobenzene)* (122-66-7)	X			"						1	"		"		
31B. Fluoranthene (206-44-0)	X			"						1	"		"		
32B. Fluorene (86-73-7)	X			"						1	"		"		
33B. Hexachlorobenzene (118-71-1)	X			"						1	"		"		
34B. Hexachlorobutadiene (87-68-3)	X			"						1	"		"		
35B. Hexachlorocyclopentadiene (77-47-4)	X			"						1	"		"		
36B. Hexachloroethane (67-72-1)	X			"						1	"		"		
37B. Indeno *(1,2,3-cd)* Pyrene (193-39-5)	X			<0.025						1	"		"		
38B. Isophorone (78-59-1)	X			<0.01						1	"		"		
39B. Naphthalene (91-20-3)	X			"						1	"		"		
40B. Nitrobenzene (98-95-3)	X			"						1	"		"		
41B. N-Nitrosodimethylamine (62-75-9)	X			"						1	"		"		
42B. N-Nitrosodi-N-Propylamine (621-64-7)	X			"						1	"		"		

CONTINUE ON REVERSE

CONTINUED FROM THE FRONT

1. POLLUTANT AND CAS NUMBER (if available)	2. MARK 'X' a. TESTING REQUIRED	b. BELIEVED PRESENT	c. BELIEVED ABSENT	3. EFFLUENT a. MAXIMUM DAILY VALUE (1) CONCENTRATION	(2) MASS	b. MAXIMUM 30 DAY VALUE (if available) (1) CONCENTRATION	(2) MASS	c. LONG TERM AVRG. VALUE (if available) (1) CONCENTRATION	(2) MASS	d. NO. OF ANALYSES	4. UNITS a. CONCENTRATION	b. MASS	5. INTAKE (optional) a. LONG TERM AVRG. VALUE (1) CONCENTRATION	(2) MASS	b. NO. OF ANALYSES
GC/MS FRACTION — BASE/NEUTRAL COMPOUNDS *(continued)*															
43B. N-Nitrosodiphenylamine (86-30-6)	X			<0.01						1	PPM		NA		
44B. Phenanthrene (85-01-8)	X			"						1	"		"		
45B. Pyrene (129-00-0)	X			"						1	"		"		
46B. 1,2,4-Trichlorobenzene (120-82-1)	X			"						1	"		"		
GC/MS FRACTION — PESTICIDES															
1P. Aldrin (309-00-2)	X			<0.01						1	"		"		
2P. α-BHC (319-84-6)	X			"						1	"		"		
3P. β-BHC (319-85-7)	X			"						1	"		"		
4P. γ-BHC (58-89-9)	X			"						1	"		"		
5P. δ-BHC (319-86-8)	X			"						1	"		"		
6P. Chlordane (57-74-9)	X			"						1	"		"		
7P. 4,4'-DDT (50-29-3)	X			"						1	"		"		
8P. 4,4'-DDE (72-55-9)	X			"						1	"		"		
9P. 4,4'-DDD (72-54-8)	X			"						1	"		"		
10P. Dieldrin (60-57-1)	X			"						1	"		"		
11P. α-Endosulfan (115-29-7)	X			"						1	"		"		
12P. β-Endosulfan (115-29-7)	X			"						1	"		"		
13P. Endosulfan Sulfate (1031-07-8)	X			"						1	"		"		
14P. Endrin (72-20-8)	X			"						1	"		"		
15P. Endrin Aldehyde (7421-93-4)	X			"						1	"		"		
16P. Heptechlor (76-44-8)	X			"						1	"		"		

CONTINUE ON PAGE V-9

EPA I.D. NUMBER (copy from Item 1 of Form 1)	OUTFALL NUMBER
MSD990714081	002

Form Approved OMB No. 158-R0173

CONTINUED FROM PAGE V-8

1. POLLUTANT AND CAS NUMBER (if available)	2. MARK 'X' a. TESTING REQUIRED	b. BELIEVED PRESENT	c. BELIEVED ABSENT	3. EFFLUENT a. MAXIMUM DAILY VALUE (1) CONCENTRATION	(2) MASS	b. MAXIMUM 30 DAY VALUE (if available) (1) CONCENTRATION	(2) MASS	c. LONG TERM AVRG. VALUE (if available) (1) CONCENTRATION	(2) MASS	d. NO. OF ANALYSES	4. UNITS a. CONCENTRATION	b. MASS	5. INTAKE (optional) a. LONG TERM AVERAGE VALUE (1) CONCENTRATION	(2) MASS	b. NO. OF ANALYSES
GC/MS FRACTION – PESTICIDES (continued)															
17P. Heptachlor Epoxide (1024-57-3)	X			<0.01						1	ppm		NA		
18P. PCB-1242 (53469-21-9)	X			"						1	"		"		
19P. PCB-1254 (11097-69-1)	X			"						1	"		"		
20P. PCB-1221 (11104-28-2)	X			"						1	"		"		
21P. PCB-1232 (11141-16-5)	X			"						1	"		"		
22P. PCB-1248 (12672-29-6)	X			"						1	"		"		
23P. PCB-1260 (11096-82-5)	X			"						1	"		"		
24P. PCB-1016 (12674-11-2)	X			"						1	"		"		
25P. Toxaphene (8001-35-2)	X			"						1	"		"		

PLEASE PRINT OR TYPE IN THE UNSHADED AREAS ONLY. You may report some or all of this information on separate sheets *(use the same format)* instead of completing these pages. SEE INSTRUCTIONS.

EPA I.D. NUMBER *(copy from Item 1 of Form 1)*: MSD990714081

Form Approved OMB No. 158-R0173

OUTFALL NO. 003

V. INTAKE AND EFFLUENT CHARACTERISTICS *(continued from page 3 of Form 2-C)*

PART A - You must provide the results of at least one analysis for every pollutant in this table. Complete one table for each outfall. See instructions for additional details.

1. POLLUTANT	2. EFFLUENT a. MAXIMUM DAILY VALUE (1) CONCENTRATION	a. (2) MASS	b. MAXIMUM 30 DAY VALUE *(if available)* (1) CONCENTRATION	b. (2) MASS	c. LONG TERM AVRG. VALUE *(if available)* (1) CONCENTRATION	c. (2) MASS	d. NO. OF ANALYSES	3. UNITS *(specify if blank)* a. CONCENTRATION	b. MASS	4. INTAKE *(optional)* a. LONG TERM AVERAGE VALUE (1) CONCENTRATION	a. (2) MASS	b. NO. OF ANALYSES
a. Biochemical Oxygen Demand *(BOD)*	<1.0	<8	NA	NA	NA	NA	1	ppm	lbs	NA		
b. Chemical Oxygen Demand *(COD)*	<3.7	<31	"	"	"	"	1	ppm	lbs	"		
c. Total Organic Carbon *(TOC)*	8.5	69.5	"	"	"	"	1	ppm	lbs	"		
d. Total Suspended Solids *(TSS)*	18.0	147	"	"	"	"	1	ppm	lbs	"		
e. Ammonia *(as N)*	588	4954	200	1434	74	449	101	ppm	lbs	"		
f. Flow	VALUE 1.32		VALUE 0.84		VALUE 0.62		101	-	mgd	VALUE NA		
g. Temperature *(winter)*	VALUE 22		VALUE 18		VALUE 13		99	°C		VALUE "		
h. Temperature *(summer)*	VALUE 32		VALUE 28		VALUE 26		99	°C		VALUE "		
i. pH	MINIMUM 2.0	MAXIMUM 11.6	MINIMUM NA	MAXIMUM NA			119	STANDARD UNITS				

PART B - Mark "X" in column 2-a for each pollutant you know or have reason to believe is present. Mark "X" in column 2-b for each pollutant you believe to be absent. If you mark column 2-a for any pollutant, you must provide the results of at least one analysis for that pollutant. Complete one table for each outfall. See the instructions for additional details and requirements.

1. POLLUTANT AND CAS NO. *(if available)*	2. MARK 'X' a. BELIEVED PRESENT	b. BELIEVED ABSENT	3. EFFLUENT a. MAXIMUM DAILY VALUE (1) CONCENTRATION	a. (2) MASS	b. MAXIMUM 30 DAY VALUE *(if available)* (1) CONCENTRATION	b. (2) MASS	c. LONG TERM AVRG. VALUE *(if available)* (1) CONCENTRATION	c. (2) MASS	d. NO. OF ANALYSES	4. UNITS a. CONCENTRATION	b. MASS	5. INTAKE *(optional)* a. LONG TERM AVERAGE VALUE (1) CONCENTRATION	a. (2) MASS	b. NO. OF ANALYSES
a. Bromide (24959-67-9)			1.3	10.6					1	ppm	lbs	NA		
b. Chlorine, Total Residual			1056	5679	281	1600	178	719	101	"	"	"		
c. Color			20	NA					1	"	"	"		
d. Fecal Coliform			0	0					1	"	"	"		
e. Fluoride (16984-48-8)			1.2	9.8					1	"	"	"		
f. Nitrate-Nitrite *(as N)*			795.3	6500					1	"	"	"		

CONTINUE ON REVERSE

ITEM V-B CONTINUED FROM FRONT 003

1. POLLUTANT AND CAS NO. (If available)	2. MARK 'X' a. BELIEVED PRESENT	b. BELIEVED ABSENT	3. EFFLUENT a. MAXIMUM DAILY VALUE (1) CONCENTRATION	(2) MASS	b. MAXIMUM 30 DAY VALUE (If available) (1) CONCENTRATION	(2) MASS	c. LONG TERM AVRG. VALUE (If available) (1) CONCENTRATION	(2) MASS	d. NO. OF ANALYSES	4. UNITS a. CONCENTRATION	b. MASS	5. INTAKE (optional) a. LONG TERM AVERAGE VALUE (1) CONCENTRATION	(2) MASS	b. NO. OF ANALYSES
g. Nitrogen, Total Organic (as N)			0.39	3.2					1	ppm	lbs	NA		
h. Oil and Grease			3.1	25.3					1	"	"	"		
i. Phosphorus (as P), Total (7723-14-0)			.54	4.4					1	"	"	"		
j. Radioactivity														
(1) Alpha, Total		X	NA						-			"		
(2) Beta, Total		X	NA						-			"		
(3) Radium, Total		X	NA						-			"		
(4) Radium 226, Total		X	NA						-			"		
k. Sulfate (as SO_4) (14808-79-8)			27.5	225					1	"	"	"		
l. Sulfide (as S)			0.2	1.6					1	"	"	"		
m. Sulfite (as SO_3) (14265-45-3)			17.0	139					1	"	"	"		
n. Surfactants			1.8	14.7					1	"	"	"		
o. Aluminum, Total (7429-90-5)			0.80	6.5					1	"	"	"		
p. Barium, Total (7440-39-3)			0.039	.32					1	"	"	"		
q. Boron, Total (7440-42-8)			<1.0	<8					1	"	"	"		
r. Cobalt, Total (7440-48-4)			<0.2	<1.6					1	"	"	"		
s. Iron, Total (7439-89-6)			1.26	10.3					1	"	"	"		
t. Magnesium, Total (7439-95-4)			12.4	101					1	"	"	"		
u. Molybdenum, Total (7439-98-7)			0.132	1.1					1	"	"	"		
v. Manganese, Total (7439-96-5)			0.07	0.6					1	"	"	"		
w. Tin, Total (7440-31-5)			<0.1	<0.8					1	"	"	"		
x. Titanium, Total (7440-32-6)			<0.1	<0.8					1	"	"	"		

CONTINUE ON PAGE V-3

EPA I.D. NUMBER (copy from Item I of Form 1)	OUTFALL NUMBER
MSD990714081	003

Form Approved OMB No. 158-R0173

CONTINUED FROM PAGE 3 OF FORM 2-C

PART C - If you are a primary industry and this outfall contains process wastewater, refer to Table 2c-2 in the instructions to determine which of the GC/MS fractions you must test for. Mark "X" in column 2-a for all such GC/MS fractions that apply to your industry and for ALL toxic metals, cyanides, and total phenols. If you are not required to mark column 2-a *(secondary industries, non-process wastewater outfalls, and non-required GC/MS fractions)*, mark "X" in column 2-b for each pollutant you know or have reason to believe is present. Mark "X" in column 2-c for each pollutant you believe to be absent. If you mark either columns 2-a or 2-b for any pollutant, you must provide the results of at least one analysis for that pollutant. Note that there are seven pages to this part; please review each carefully. Complete one table *(all seven pages)* for each outfall. See instructions for additional details and requirements.

1. POLLUTANT AND CAS NUMBER (If available)	2. MARK 'X'			3. EFFLUENT							4. UNITS		5. INTAKE (optional)		
	a. TESTING REQUIRED	b. BELIEVED PRESENT	c. BELIEVED ABSENT	a. MAXIMUM DAILY VALUE (1) CONCENTRATION	a. MAXIMUM DAILY VALUE (2) MASS	b. MAXIMUM 30 DAY VALUE (if available) (1) CONCENTRATION	b. MAXIMUM 30 DAY VALUE (if available) (2) MASS	c. LONG TERM AVRG. VALUE (if available) (1) CONCENTRATION	c. LONG TERM AVRG. VALUE (if available) (2) MASS	d. NO. OF ANALYSES	a. CONCENTRATION	b. MASS	a. LONG TERM AVERAGE VALUE (1) CONCENTRATION	a. LONG TERM AVERAGE VALUE (2) MASS	b. NO. OF ANALYSES
METALS, CYANIDE, AND TOTAL PHENOLS															
1M. Antimony, Total (7440-36-0)	X			<0.1	<0.8					1	ppm	lbs	NA		
2M. Arsenic, Total (7440-38-2)	X			0.31	2.5					1	"	"	"		
3M. Beryllium, Total, 7440-41-7)	X			<0.002	<0.02					1	"	"	"		
4M. Cadmium, Total (7440-43-9)	X			<0.001	<0.01					1	"	"	"		
5M. Chromium, Total (7440-47-3)	X			0.11	0.9					1	"	"	"		
6M. Copper, Total (7550-50-8)	X			0.025	0.2					1	"	"	"		
7M. Lead, Total (7439-97-6)	X			0.018	0.1					1	"	"	"		
8M. Mercury, Total (7439-97-6)	X			<0.002	<0.02					1	"	"	"		
9M. Nickel, Total (7440-02-0)	X			0.026	0.2					1	"	"	"		
10M. Selenium, Total (7782-49-2)	X			0.069	0.6					1	"	"	"		
11M. Silver, Total (7440-22-4)	X			<0.002	<0.02					1	"	"	"		
12M. Thallium, Total (7440-28-0)	X			<0.01	<0.01					1	"	"	"		
13M. Zinc, Total (7440-66-6)	X			0.08	0.7					1	"	"	"		
14M. Cyanide, Total (57-12-5)	X			<0.01	<0.1					1	"	"	"		
15M. Phenols, Total	X			<0.05	<0.4					1	"	"	"		
DIOXIN															
2,3,7,8-Tetrachlorodibenzo-P-Dioxin (1784-01-6)			X	DESCRIBE RESULTS											

CONTINUE ON REVERSE

CONTINUED FROM THE FRONT

1. POLLUTANT AND CAS NUMBER (if available)	2. MARK "X" a. TESTING REQUIRED	b. BELIEVED PRESENT	c. BELIEVED ABSENT	3. EFFLUENT a. MAXIMUM DAILY VALUE (1) CONCENTRATION	(2) MASS	b. MAXIMUM 30 DAY VALUE (if available) (1) CONCENTRATION	(2) MASS	c. LONG TERM AVRG. VALUE (if available) (1) CONCENTRATION	(2) MASS	d. NO. OF ANALYSES	4. UNITS a. CONCENTRATION	b. MASS	5. INTAKE (optional) a. LONG TERM AVRG. VALUE (1) CONCENTRATION	(2) MASS	b. NO. OF ANALYSES
GC/MS FRACTION – VOLATILE COMPOUNDS															
1V. Acrolein (107-02-8)	X			<0.01	NA					1	ppm		NA		
2V. Acrylonitrile (107-13-1)	X			"	"					1	"		"		
3V. Benzene (71-43-2)	X			"	"					1	"		"		
4V. Bis (Chloromethyl) Ether (542-88-1)	X			"	"					1	"		"		
5V. Bromoform (75-25-2)	X			"	"					1	"		"		
6V. Carbon Tetrachloride (56-23-5)	X			"	"					1	"		"		
7V. Chlorobenzene (108-90-7)	X			"	"					1	"		"		
8V. Chlorodibromomethane (124-48-1)	X			0.05	0.41					1	"	lbs	"		
9V. Chloroethane (75-00-3)	X			<0.01	NA					1	"		"		
10V. 2-Chloroethylvinyl Ether (110-75-8)	X			"	"					1	"		"		
11V. Chloroform (67-66-3)	X			0.57	4.7					1	"	lbs	"		
12V. Dichlorobromomethane (75-27-4)	X			0.17	1.4					1	"	lbs	"		
13V. Dichlorodifluoromethane (75-71-8)	X			<0.01	NA					1	"		"		
14V. 1,1-Dichloroethane (75-34-3)	X			"	"					1	"		"		
15V. 1,2-Dichloroethane (107-06-2)	X			"	"					1	"		"		
16V. 1,1-Dichloroethylene (75-35-4)	X			"	"					1	"		"		
17V. 1,2-Dichloropropane (78-87-5)	X			"	"					1	"		"		
18V. 1,2-Dichloropropylene (542-75-6)	X			"	"					1	"		"		
19V. Ethylbenzene (100-41-4)	X			"	"					1	"		"		
20V. Methyl Bromide (74-83-9)	X			"	"					1	"		"		
21V. Methyl Chloride (74-87-3)	X			"	"					1	"		"		

CONTINUE ON PAGE V-

CONTINUED [redacted] PAGE V-4

EPA I.D. NUMBER (copy from Item 1 of Form 1): MSD990714081

OUTFALL NUMBER: 003

Form Approved OMB No. 158-R0173

1. POLLUTANT AND CAS NUMBER (if available)	2. MARK 'X' a. TESTING REQUIRED	b. BELIEVED PRESENT	c. BELIEVED ABSENT	3. EFFLUENT a. MAXIMUM DAILY VALUE (1) CONCENTRATION	(2) MASS	b. MAXIMUM 30 DAY VALUE (if available) (1) CONCENTRATION	(2) MASS	c. LONG TERM AVRG. VALUE (if available) (1) CONCENTRATION	(2) MASS	d. NO. OF ANALYSES	4. UNITS a. CONCENTRATION	b. MASS	5. [redacted]KE (optional) a. LO[redacted]ERM AVERA[redacted]VALUE (1) CONCENTRATION	(2) MASS	b. NO. OF ANALYSES
GC/MS FRACTION – VOLATILE COMPOUNDS (continued)															
22V. Methylene Chloride (75-09-2)	X			<0.01						1	PPM		NA		
23V. 1,1,2,2-Tetrachloroethane (79-34-5)	X			"						1	"		"		
24V. Tetrachloroethylene (127-18-4)	X			"						1	"		"		
25V. Toluene (108-88-3)	X			"						1	"		"		
26V. 1,2-Trans-Dichloroethylene (156-60-5)	X			"						1	"		"		
27V. 1,1,1-Trichloroethane (71-55-6)	X			"						1	"		"		
28V. 1,1,2-Trichloroethane (79-00-5)	X			"						1	"		"		
29V. Trichloroethylene (79-01-6)	X			"						1	"		"		
30V. Trichlorofluoromethane (75-69-4)	X			"						1	"		"		
31V. Vinyl Chloride (75-01-4)	X			"						1	"		"		
GC/MS FRACTION – ACID COMPOUNDS															
1A. 2-Chlorophenol (95-57-8)	X			<0.025						1	"		"		
2A. 2,4-Dichlorophenol (120-83-2)	X			"						1	"		"		
3A. 2,4-Dimethylphenol (105-67-9)	X			"						1	"		"		
4A. 4,6-Dinitro-O-Cresol (534-52-1)	X			<0.05						1	"		"		
5A. 2,4-Dinitrophenol (51-28-5)	X			<0.05						1	"		"		
6A. 2-Nitrophenol (88-75-5)	X			<0.025						1	"		"		
7A. 4-Nitrophenol (100-02-7)	X			"						1	"		"		
8A. P-Chloro-M-Cresol (59-50-7)	X			"						1	"		"		
9A. Pentachlorophenol (87-86-5)	X			"						1	"		"		
10A. Phenol (108-95-2)	X			"						1	"		"		
11A. 2,4,6-Trichlorophenol (88-06-2)	X			"						1	"		"		

CONTINUE ON REVERSE

CONTINUED FROM THE FRONT

1. POLLUTANT AND CAS NUMBER (if available)	2. MARK "X" a. TESTING REQUIRED	b. BELIEVED PRESENT	c. BELIEVED ABSENT	3. EFFLUENT a. MAXIMUM DAILY VALUE (1) CONCENTRATION	(2) MASS	b. MAXIMUM 30 DAY VALUE (if available) (1) CONCENTRATION	(2) MASS	c. LONG TERM AVRG. VALUE (if available) (1) CONCENTRATION	(2) MASS	d. NO. OF ANALYSES	4. UNITS a. CONCENTRATION	b. MASS	5. INTAKE (optional) a. LONG TERM AVERAGE VALUE (1) CONCENTRATION	(2) MASS	b. NO. OF ANALYSES
GC/MS FRACTION — BASE/NEUTRAL COMPOUNDS															
1B. Acenaphthene (83-32-9)	X			<0.01						1	PPM		NA		
2B. Acenaphtylene (208-96-8)	X			"						1	"		"		
3B. Anthracene (120-12-7)	X			"						1	"		"		
4B. Benzidine (92-87-5)	X			"						1	"		"		
5B. Benzo (a) Anthracene (56-55-3)	X			"						1	"		"		
6B. Benzo (a) Pyrene (50-32-8)	X			<0.025						1	"		"		
7B. 3,4-Benzo-fluoranthene (205-99-2)	X			<0.01						1	"		"		
8B. Benzo (ghi) Perylene (191-24-2)	X			"						1	"		"		
9B. Benzo (k) Fluoranthene (207-08-9)	X			"						1	"		"		
10B. Bis (2-Chloro-ethoxy) Methane (111-91-1)	X			"						1	"		"		
11B. Bis (2-Chloro-ethyl) Ether (111-44-4)	X			"						1	"		"		
12B. Bis (2-Chloro-isopropyl) Ether (39638-32-9)	X			"						1	"		"		
13B. Bis (2-Ethyl-hexyl) Phthalate (117-81-7)	X			"						1	"		"		
14B. 4-Bromo-phenyl Phenyl Ether (101-55-3)	X			"						1	"		"		
15B. Butyl Benzyl Phthalate (85-68-7)	X			"						1	"		"		
16B. 2-Chloro-naphthalene (91-58-7)	X			"						1	"		"		
17B. 4-Chloro-phenyl Phenyl Ether (7005-72-3)	X			"						1	"		"		
18B. Chrysene (218-01-9)	X			"						1	"		"		
19B. Dibenzo (a,h) Anthracene (53-70-3)	X			<0.025						1	"		"		
20B. 1,2-Dichloro-benzene (95-50-1)	X			<0.01						1	"		"		
21B. 1,3-Dichloro-benzene (541-73-1)	X			"						1	"		"		

CONTINUE ON PAGE V-7

EPA I.D. NUMBER (copy from Item 1 of Form 1)	OUTFALL NUMBER
MSD990714081	003

Form Approved [illegible]. 158-R0173

CONTINUED FROM PAGE V-6

1. POLLUTANT AND CAS NUMBER (if available)	2. MARK 'X' a. TEST INC. REQUIRED	b. BELIEVED PRESENT	c. BELIEVED ABSENT	3. EFFLUENT a. MAXIMUM DAILY VALUE (1) CONCENTRATION	(2) MASS	b. MAXIMUM 30 DAY VALUE (if available) (1) CONCENTRATION	(2) MASS	c. LONG TERM AVRG. VALUE (if available) (1) CONCENTRATION	(2) MASS	d. NO. OF ANALYSES	4. UNITS a. CONCENTRATION	b. MASS	5. INTAKE (optional) a. LONG TERM AVERAGE VALUE (1) CONCENTRATION	(2) MASS	b. NO. OF ANALYSES
GC/MS FRACTION – BASE/NEUTRAL COMPOUNDS *(continued)*															
22B. 1,4-Dichlorobenzene (106-46-7)	X			<0.01						1	PPM		NA		
23B. 3,3'-Dichlorobenzidine (91-94-1)	X			"						1	"		"		
24B. Diethyl Phthalate (84-66-2)	X			"						1	"		"		
25B. Dimethyl Phthalate (131-11-3)	X			"						1	"		"		
26B. Di-N-Butyl Phthalate (84-74-2)	X			"						1	"		"		
27B. 2,4-Dinitrotoluene (121-14-2)	X			"						1	"		"		
28B. 2,6-Dinitrotoluene (606-20-2)	X			"						1	"		"		
29B. Di-N-Octyl Phthalate (117-84-0)	X			"						1	"		"		
30B. 1,2-Diphenylhydrazine (as Azobenzene) (122-66-7)	X			"						1	"		"		
31B. Fluoranthene (206-44-0)	X			"						1	"		"		
32B. Fluorene (86-73-7)	X			"						1	"		"		
33B. Hexachlorobenzene (118-71-1)	X			"						1	"		"		
34B. Hexachlorobutadiene (87-68-3)	X			"						1	"		"		
35B. Hexachlorocyclopentadiene (77-47-4)	X			"						1	"		"		
36B. Hexachloroethane (67-72-1)	X			"						1	"		"		
37B. Indeno (1,2,3-cd) Pyrene (193-39-5)	X			<0.025						1	"		"		
38B. Isophorone (78-59-1)	X			<0.01						1	"		"		
39B. Naphthalene (91-20-3)	X			"						1	"		"		
40B. Nitrobenzene (98-95-3)	X			"						1	"		"		
41B. N-Nitrosodimethylamine (62-75-9)	X			"						1	"		"		
42B. N-Nitrosodi-N-Propylamine (621-64-7)	X			"						1	"		"		

CONTINUE ON REVERSE

CONTINUED FROM THE FRONT

1. POLLUTANT AND CAS NUMBER (if available)	2. MARK 'X' a. TESTING REQUIRED	b. BELIEVED PRESENT	c. BELIEVED ABSENT	3. EFFLUENT a. MAXIMUM DAILY VALUE (1) CONCENTRATION	(2) MASS	b. MAXIMUM 30 DAY VALUE (if available) (1) CONCENTRATION	(2) MASS	c. LONG TERM AVRG. VALUE (if available) (1) CONCENTRATION	(2) MASS	d. NO. OF ANALYSES	4. UNITS a. CONCENTRATION	b. MASS	5. INTAKE (optional) a. LONG TERM AVERAGE VALUE (1) CONCENTRATION	(2) MASS	b. NO. OF ANALYSES
GC/MS FRACTION – BASE/NEUTRAL COMPOUNDS *(continued)*															
43B. N-Nitrosodiphenylamine (86-30-6)	X			<0.01						1	ppm		NA		
44B. Phenanthrene (85-01-8)	X			"						1	"		"		
45B. Pyrene (129-00-0)	X			"						1	"		"		
46B. 1,2,4-Trichlorobenzene (120-82-1)	X			"						1	"		"		
GC/MS FRACTION – PESTICIDES															
1P. Aldrin (309-00-2)	X			<0.01						1	"		"		
2P. α-BHC (319-84-6)	X			"						1	"		"		
3P. β-BHC (319-85-7)	X			"						1	"		"		
4P. γ-BHC (58-89-9)	X			"						1	"		"		
5P. δ-BHC (319-86-8)	X			"						1	"		"		
6P. Chlordane (57-74-9)	X			"						1	"		"		
7P. 4,4'-DDT (50-29-3)	X			"						1	"		"		
8P. 4,4'-DDE (72-55-9)	X			"						1	"		"		
9P. 4,4'-DDD (72-54-8)	X			"						1	"		"		
10P. Dieldrin (60-57-1)	X			"						1	"		"		
11P. α-Endosulfan (115-29-7)	X			"						1	"		"		
12P. β-Endosulfan (115-29-7)	X			"						1	"		"		
13P. Endosulfan Sulfate (1031-07-8)	X			"						1	"		"		
14P. Endrin (72-20-8)	X			"						1	"		"		
15P. Endrin Aldehyde (7421-93-4)	X			"						1	"		"		
16P. Heptachlor (76-44-8)	X			"						1	"		"		

 CONTINUE ON PAGE V-9

Form Approved OMB No. 158-R0173

EPA I.D. NUMBER (copy from Item 1 of Form 1)	OUTFALL NUMBER
MSD990714081	003

CONTINUED FROM PAGE V-8

1. POLLUTANT AND CAS NUMBER (if available)	2. MARK 'X' a. TESTING REQUIRED	b. BELIEVED PRESENT	c. BELIEVED ABSENT	3. EFFLUENT a. MAXIMUM DAILY VALUE (1) CONCENTRATION	(2) MASS	b. MAXIMUM 30 DAY VALUE (if available) (1) CONCENTRATION	(2) MASS	c. LONG TERM AVRG. VALUE (if available) (1) CONCENTRATION	(2) MASS	d. NO. OF ANALYSES	4. UNITS a. CONCENTRATION	b. MASS	5. INTAKE (optional) a. LONG TERM AVERAGE VALUE (1) CONCENTRATION	(2) MASS	b. NO. OF ANALYSES
GC/MS FRACTION – PESTICIDES *(continued)*															
17P. Heptachlor Epoxide (1024-57-3)	X			<0.01						1	PPM		NA		
18P. PCB-1242 (53469-21-9)	X			"						1	"		"		
19P. PCB-1254 (11097-69-1)	X			"						1	"		"		
20P. PCB-1221 (11104-28-2)	X			"						1	"		"		
21P. PCB-1232 (11141-16-5)	X			"						1	"		"		
22P. PCB-1248 (12672-29-6)	X			"						1	"		"		
23P. PCB-1260 (11096-82-5)	X			"						1	"		"		
24P. PCB-1016 (12674-11-2)	X			"						1	"		"		
25P. Toxaphene (8001-35-2)	X			"						1	"		"		

SECTION V - ADDITIONAL DATA

Outfall	Pollutant	Max. Daily		Max. 30-Day		Long Term		No. of Analyses	Units	
		Conc.	Mass	Conc.	Mass	Conc.	Mass		Conc.	Mass
001	Toxaphene	<1	<0.1	<1	<0.1	<1	<0.1	98	ppb	lbs
001	2-sec-butly-dinitrophenol	6	37	0.8	6	0.33	1.7	98	ppm	lbs
002	Nitrate-N	4080	7980	1506	3135	1275	2395	170	ppm	lbs
003	Nitrate-N	2010	14400	1105	6570	851	4280	101	ppm	lbs
003	Chlorine free available residual	800	1378	208	416	37	99	101	ppm	lbs

RECEIVED
NOV 12 1986
DEPT. OF NATURAL RESOURCE
BUREAU OF POLLUTION CONTROL

ATTACHMENT C

MISSISSIPPI DEPARTMENT OF NATURAL RESOURCES
Bureau of Pollution Control
P. O. Box 10385
Jackson, Mississippi 39209
(601) 961-5171

November 8, 1985

Mr. John Hill
Environmental Engineer
Vertac Chemical Corporation
P. O. Box 3
Vicksburg, Mississippi 39180

Dear Mr. Hill:

Re: NPDES Permit No. MS0027995

We are in receipt of your letter of October 29, 1985, regarding the discharge of 3000 gallons of waste solution of acetic acid. We see no problems for Vertac to discharge this solution as long as such solution is discharged within Vertac's NPDES permit. However, approval of this office to discharge such solution does not relieve Vertac from the responsibility of any permit violations that might occur as a result of the discharge.

If you have any questions, please advise.

Respectfully,

Matthew Chun
Industrial Wastewater Control Section

MC:els

RECEIVED
NOV 12 1986
DEPT. OF NATURAL RESOURCE
BUREAU OF POLLUTION CONTROL

ATTACHMENT D

MISSISSIPPI DEPARTMENT OF NATURAL RESOURCES

GENERATOR ANNUAL HAZARDOUS WASTE REPORT

This report is for the calendar year ending 1981

Refer to the Specific Instructions enclosed before completing this form.

Please print or type.

I. GENERATOR'S EPA I.D. NUMBER

MSD 9907 14081

II. NAME OF INSTALLATION

Vertac Chemical Corporation

III. INSTALLATION MAILING ADDRESS

P.O. Box 3
Street or P. O. Box

Vicksburg — MS — 39180
City or Town — State — Zip Code

IV. LOCATION OF INSTALLATION (if different than section III above)

Street or Route number

City or Town — State — Zip Code

V. INSTALLATION CONTACT

Maraman, Robert
Name (last and first)

601-636-1231
Phone No. (area code & no.)

VII. CERTIFICATION

I certify under penalty of law that I have personally examined and am familiar with the information submitted in this and all attached documents, and that based on my inquiry of those individuals immediately responsible for obtaining the information, I believe that the submitted information is true, accurate, and complete. I am aware that there are significant penalties for submitting false information, including the possibility of fine and imprisonment.

R.F. MARAMAN — CHIEF CHEMIST — R.F. Maraman — 2-22-83
Print/Type Name — Title — Signature of Authorized Representative — Date

MISSISSIPPI DEPARTMENT OF NATURAL RESOURCES

GENERATOR ANNUAL HAZARDOUS WASTE REPORT (CONT.)

This report is for the calendar year ending 1981

VII. GENERATOR'S EPA I.D. NO.

MSD 9907 14081

VIII. FACILITY NAME (specify facility to which all wastes on this page were shipped)

Calgon Corp.

IX. FACILITY'S EPA I.D. NO.

TDX 086476850

X. FACILITY ADDRESS
9640 Bayport Blvd.
Pasadena, TX 77507

XI. TRANSPORTATION SERVICES USED (List the name and EPA identification numbers of all transporters whose services were used during the reporting period. This section to be completed only once. Do not repeat on supplemental sheets.)

Calgon Corp. PAD 004319810
Brown & Ferris Industries LAD 000642694

XII. WASTE IDENTIFICATION

Line #	A. Description of Waste	B. DOT Hazard Code	C. EPA Hazardous Waste No. (see instructions)	D. Amount of Waste	E. Unit of Measure
1	Hazardous Waste Solid, Spent Carbon	01	P-020	344.4	T.
2					
3					
4					
5					
6					
7					
8					
9					
10					
11					
12					

XIII. COMMENTS (enter information by section number - see instructions)

MISSISSIPPI DEPARTMENT OF NATURAL RESOURCES

GENERATOR ANNUAL HAZARDOUS WASTE REPORT (CONT.)

This report is for the calendar year ending 1981

VII. GENERATOR'S EPA I.D. NO.

MSD 9907 14081

VIII. FACILITY NAME (specify facility to which all wastes on this page were shipped)

Brown & Ferris Industries
Livingston LA Facility

IX. FACILITY'S EPA I.D. NO.

LAD 000618298

X. FACILITY ADDRESS

La 63 at I-12, P.O. Box 473
Livingston, LA 70454

XI. TRANSPORTATION SERVICES USED (List the name and EPA identification numbers of all transporters whose services were used during the reporting period. This section to be completed only once. Do not repeat on supplemental sheets.)

XII. WASTE IDENTIFICATION

Line #	A. Description of Waste	B. DOT Hazard Code	C. EPA Hazardous Waste No. (see instructions)	D. Amount of Waste	E. Unit of Measure
1	Metal Drums with Dinitro Butyl Phenol	18	P-020	11.3	T.
2	Empty Atrazine Fiber Drums	10	N.A.	7.2	T.
3	Plastic Liners from Cyanuric Chloride	10			
4	Drums		N.A.	1.5	T.
5	Metal Drums with Dinitro Orthocresol	18	P-047	18.3	T.
6					
7					
8					
9					
10					
11					
12					

XIII. COMMENTS (enter information by section number - see instructions)
The items in Lines 2 & 3 cannot be located under the hazardous waste numbers but for the present and for purposes of this report are assumed to be hazardous.

RECEIVED
NOV 12 1986
DEPT OF NATURAL RESOURCE
BUREAU OF POLLUTION CONTROL

ATTACHMENT E

MISSISSIPPI DEPARTMENT OF NATURAL RESOURCES

GENERATOR ANNUAL HAZARDOUS WASTE REPORT

This report is for the calendar year ending 1982

Refer to the Specific Instructions enclosed before completing this form.

Please print or type.

I. GENERATOR'S EPA I.D. NUMBER

MSD 9907 14081

II. NAME OF INSTALLATION

Vertac Chemical Corporation

III. INSTALLATION MAILING ADDRESS

P.O. Box 3
Street or P. O. Box

Vicksburg	MS	39180
City or Town	State	Zip Code

IV. LOCATION OF INSTALLATION (if different than section III above)

Street or Route number

City or Town	State	Zip Code

V. INSTALLATION CONTACT

Maraman, Robert
Name (last and first)

601-636-1231
Phone No. (area code & no.)

VII. CERTIFICATION

I certify under penalty of law that I have personally examined and am familiar with the information submitted in this and all attached documents, and that based on my inquiry of those individuals immediately responsible for obtaining the information, I believe that the submitted information is true, accurate, and complete. I am aware that there are significant penalties for submitting false information, including the possibility of fine and imprisonment.

R.F. MARAMAN	CHIEF CHEMIST	R.F. Maraman	2-28-83
Print/Type Name	Title	Signature of Authorized Representative	Date

MISSISSIPPI DEPARTMENT OF NATURAL RESOURCES

GENERATOR ANNUAL HAZARDOUS WASTE REPORT (CONT.)

This report is for the calendar year ending 1982

VII. GENERATOR'S EPA I.D. NO.

MSD 9907 14081

VIII. FACILITY NAME (specify facility to which all wastes on this page were shipped)

Calgon Carbon Corp.

IX. FACILITY'S EPA I.D. NO.

TDX 086476850

X. FACILITY ADDRESS
9640 Bayport Blvd.
Pasadena, TX 77507

XI. TRANSPORTATION SERVICES USED (List the name and EPA identification numbers of all transporters whose services were used during the reporting period. This section to be completed only once. Do not repeat on supplemental sheets.)

Brown and Ferris Industries	LAD 000642694
Calgon Carbon Corp., Pasadena, TX	PAD 004319810
Calgon Carbon Corp., Catlettsburg, KY	PAD 004319810
Calgon Carbon Corp., Neville Island, PA	PAD 004319810

XII. WASTE IDENTIFICATION

Line #	A. Description of Waste	B. DOT Hazard Code	C. EPA Hazardous Waste No. (see instructions)	D. Amount of Waste	E. Unit of Measure
1	Hazardous Waste, Solid, Spent Carbon	01	P-020	883.8	T
2					
3					
4					
5					
6					
7					
8					
9					
10					
11					
12					

XIII. COMMENTS (enter information by section number - see instructions)

MISSISSIPPI DEPARTMENT OF NATURAL RESOURCES

GENERATOR ANNUAL HAZARDOUS WASTE REPORT (CONT.)

This report is for the calendar year ending 1982

VII. GENERATOR'S EPA I.D. NO.

MSD 9907 14081

VIII. FACILITY NAME (specify facility to which all wastes on this page were shipped)

Calgon Carbon Corp.
Big Sandy Plant

IX. FACILITY'S EPA I.D. NO.

KYD 005009923

X. FACILITY ADDRESS

P.O. Box 664
Catlettsburg, KY

XI. TRANSPORTATION SERVICES USED (List the name and EPA identification numbers of all transporters whose services were used during the reporting period. This section to be completed only once. Do not repeat on supplemental sheets.)

XII. WASTE IDENTIFICATION

Line #	A. Description of Waste	B. DOT Hazard Code	C. EPA Hazardous Waste No. (see instructions)	D. Amount of Waste	E. Unit of Measure
1	Hazardous Waste, Solid, Spent Carbon	01	P-020	338.3	T
2					
3					
4					
5					
6					
7					
8					
9					
10					
11					
12					

XIII. COMMENTS (enter information by section number - see instructions)

MISSISSIPPI DEPARTMENT OF NATURAL RESOURCES

GENERATOR ANNUAL HAZARDOUS WASTE REPORT (CONT.)

This report is for the calendar year ending 1982

VII. GENERATOR'S EPA I.D. NO.

MSD 9907 14081

VIII. FACILITY NAME (specify facility to which all wastes on this page were shipped)

Calgon Carbon Corp.

IX. FACILITY'S EPA I.D. NO.

PAD 004319810

X. FACILITY ADDRESS
200 Neville Road
Neville Island, PA 15225

XI. TRANSPORTATION SERVICES USED (List the name and EPA identification numbers of all transporters whose services were used during the reporting period. This section to be completed only once. Do not repeat on supplemental sheets.)

XII. WASTE IDENTIFICATION

Line #	A. Description of Waste	B. DOT Hazard Code	C. EPA Hazardous Waste No. (see instructions)	D. Amount of Waste	E. Unit of Measure
1	Hazardous Waste, Solid, Spent Carbon	01	P-020	45.2	T
2					
3					
4					
5					
6					
7					
8					
9					
10					
11					
12					

XIII. COMMENTS (enter information by section number - see instructions)

MISSISSIPPI DEPARTMENT OF NATURAL RESOURCES

GENERATOR ANNUAL HAZARDOUS WASTE REPORT (CONT.)

This report is for the calendar year ending 1982

VII. GENERATOR'S EPA I.D. NO.

MSD 9907 14081

VIII. FACILITY NAME (specify facility to which all wastes on this page were shipped)
Brown and Ferris Industries
Livingston Facility

IX. FACILITY'S EPA I.D. NO.

LAD 000618298

X. FACILITY ADDRESS
La 63 at I-12
Livingston, LA 70454

XI. TRANSPORTATION SERVICES USED (List the name and EPA identification numbers of all transporters whose services were used during the reporting period. This section to be completed only once. Do not repeat on supplemental sheets.)

XII. WASTE IDENTIFICATION

Line #	A. Description of Waste	B. DOT Hazard Code	C. EPA Hazardous Waste No. (see instructions)	D. Amount of Waste	E. Unit of Measure
1	Metal Drums Contaminated with Dinitro Orthocresol	P-047	18	12.94	T.
2	Atrazine	10	N.A.	2.5	T.
3	Dinitro Ortho Cresol	P-047	18	0.7	T.
4					
5					
6					
7					
8					
9					
10					
11					
12					

XIII. COMMENTS (enter information by section number - see instructions)
The item in Line 2 cannot be located under the hazardous waste numbers but for the present, and for purposes of this report is assumed to be hazardous.

RECEIVED
NOV 12 1986
DEPT. OF NATURAL RESOURCE
BUREAU OF POLLUTION CONTROL

ATTACHMENT F-1

GENERATOR ANNUAL HAZARDOUS WASTE REPORT

This report is for the calendar year ending December 31, 1983

I. GENERATOR'S EPA I.D. NUMBER

MSD- 990714081

II. NAME OF INSTALLATION

VERTAC CHEMICAL CORP. VICKSBURG PLANT

III. INSTALLATION MAILING ADDRESS

P.O. BOX 3 RIFLE RANGE RD
Street or P. O. Box

VICKSBURG MS. 39180
City or Town State Zip Code

IV. LOCATION OF FACILITY (if different than section III above)

Street or Route number

City or Town State Zip Code

V. INSTALLATION CONTACT

MARAMAN, ROBERT F.
Name (last and first)

601-636-1231
Phone No. (area code & no.)

VI. CERTIFICATION

I certify under penalty of law that I have personally examined and am familiar with the information submitted in this and all attached documents, and that based on my inquiry of those individuals immediately responsible for obtaining the information, I believe that the submitted information is true, accurate, and complete. I am aware that there are significant penalties for submitting false information, including the possibility of fine and imprisonment.

R.F. MARAMAN CHIEF CHEMIST R.F. Maraman 5-4-84
Print/Type Name Title Signature of Authorized Representative Date

MISSISSIPPI DEPARTMENT OF NATURAL RESOURCES

GENERATOR ANNUAL HAZARDOUS WASTE REPORT (CONT.)

This report is for the calendar year ending 12-31-83

VII. GENERATOR'S EPA I.D. NO.

MSD 990714081

VIII. FACILITY NAME (specify facility to which all wastes on this page were shipped)

ROLLINS ENVIRONMENTAL SERVICES

IX. FACILITY'S EPA I.D. NO.

LAD 010395127

X. FACILITY ADDRESS

P.O. BOX 73877
BATON ROUGE, LA. 70897

XI. TRANSPORTATION SERVICES USED (List the name and EPA identification numbers of all transporters whose services were used during the reporting period. This section to be completed only once. Do not repeat on supplemental sheets.)

SEE ATTACHED SHEET FOLLOWING PAGE.

XII. WASTE IDENTIFICATION

Line #	A. Description of Waste	B. DOT Hazard Code	C. EPA Hazardous Waste No. (see instructions)	D. Amount of Waste	E. Unit of Measure
1	CAMPHENE SOLIDS	02	D-002	1.93	T.
2	DNBP SOLIDS	18	P-020	4.09	T.
3	TRASH, GLOVES ETC. WITH DNBP	18	P-020	1.12	T.
4	DNBP LIQUID & SOLID PLUS LAB WASTE	18	P-020	2.05	T.
5	LAB WASTE SOLIDS PLUS DNBP	18	P-020	2.18	T.
6	CRUSHED CANS DNBP + LAB WASTE	18	P-020	1.53	T.
7	CAMPHENE SOLIDS AND LIQUID	02	D-002	1.96	T.
8	TOXAPHENE SOLIDS AND FILTERS	17	U-224	3.05	T
9					
10					
11					
12					

XIII. COMMENTS (enter information by section number - see instructions)

ATTACHMENT

XI TRANSPORTATION SERVICES USED.

1.	ROLLINS ENVIRONMENTAL SERVICES	LAD	010395127
2.	CALGON CARBON CORP.	PAD	004319810
3.	BROWN & FERRIS INDUSTRIES	LAD	006 18298
4.	DISPOSAL SYSTEMS INC.	TXD	078 446820
5.	GIBRALTAR WASTEWATERS INC.	TXD	000 742304
6.	SERVICE CARRIERS	LAD	043 195 379
7.	QUALITY CARRIERS INC.	TXD	053 312 1363
8.	CHEMICAL WASTE MANAGEMENT	ALD	000622464
9.	MOBLEY	TXD	0000807925

MISSISSIPPI DEPARTMENT OF NATURAL RESOURCES

GENERATOR ANNUAL HAZARDOUS WASTE REPORT (CONT.)

This report is for the calendar year ending 12-31-83

VII. GENERATOR'S EPA I.D. NO.

MSD 990714081

VIII. FACILITY NAME (specify facility to which all wastes on this page were shipped)

CALGON CORP.

IX. FACILITY'S EPA I.D. NO.

PAD 000736942

X. FACILITY ADDRESS

200 NEVILLE Rd
NEVILLE ISLAND Pa 15225

XI. TRANSPORTATION SERVICES USED (List the name and EPA identification numbers of all transporters whose services were used during the reporting period. This section to be completed only once. Do not repeat on supplemental sheets.)

XII. WASTE IDENTIFICATION

Line #	A. Description of Waste	B. DOT Hazard Code	C. EPA Hazardous Waste No. (see instructions)	D. Amount of Waste	E. Unit of Measure
1	SPENT CARBON	01	P-020	504	T.
2					
3					
4					
5					
6					
7					
8					
9					
10					
11					
12					

XIII. COMMENTS (enter information by section number - see instructions)

MISSISSIPPI DEPARTMENT OF NATURAL RESOURCES

GENERATOR ANNUAL HAZARDOUS WASTE REPORT (CONT.)

This report is for the calendar year ending 12-31-83

VII. GENERATOR'S EPA I.D. NO.

MSD 990714081

VIII. FACILITY NAME (specify facility to which all wastes on this page were shipped)

CALGON CORP
BIG SANDY PLANT

IX. FACILITY'S EPA I.D. NO.

KYD 005009923

X. FACILITY ADDRESS

P.O. BOX 664
CATTETTSBURG KY.

XI. TRANSPORTATION SERVICES USED (List the name and EPA identification numbers of all transporters whose services were used during the reporting period. This section to be completed only once. Do not repeat on supplemental sheets.)

XII. WASTE IDENTIFICATION

Line #	A. Description of Waste	B. DOT Hazard Code	C. EPA Hazardous Waste No. (see instructions)	D. Amount of Waste	E. Unit of Measure
1	SPENT CARBON	01	P-020	345	T.
2					
3					
4					
5					
6					
7					
8					
9					
10					
11					
12					

XIII. COMMENTS (enter information by section number - see instructions)

MISSISSIPPI DEPARTMENT OF NATURAL RESOURCES

GENERATOR ANNUAL HAZARDOUS WASTE REPORT (CONT.)

This report is for the calendar year ending 12-31-83

VII. GENERATOR'S EPA I.D. NO.

MSD 990714081

VIII. FACILITY NAME (specify facility to which all wastes on this page were shipped)

BROWN & FERRIS INDUSTRIES
LIVINGSTON FACILITY

IX. FACILITY'S EPA I.D. NO.

LAD 000642694

X. FACILITY ADDRESS

La 63 AT I-12
LIVINGSTON La 70454

XI. TRANSPORTATION SERVICES USED (List the name and EPA identification numbers of all transporters whose services were used during the reporting period. This section to be completed only once. Do not repeat on supplemental sheets.)

XII. WASTE IDENTIFICATION

Line #	A. Description of Waste	B. DOT Hazard Code	C. EPA Hazardous Waste No. (see instructions)	D. Amount of Waste	E. Unit of Measure
1	METAL DRUMS WITH TR. DNBP	18	P-020	0.4	T.
2	EMPTY CRUSHED C.C. DRUMS	10	N.A. (TRIAZINES)	2.7	T.
3					
4					
5					
6					
7					
8					
9					
10					
11					
12					

XIII. COMMENTS (enter information by section number - see instructions)

MISSISSIPPI DEPARTMENT OF NATURAL RESOURCES

GENERATOR ANNUAL HAZARDOUS WASTE REPORT (CONT.)

This report is for the calendar year ending 12-31-83

VII. GENERATOR'S EPA I.D. NO.

MSD- 990714081

VIII. FACILITY NAME (specify facility to which all wastes on this page were shipped)

DISPOSAL SYSTEMS INC.

IX. FACILITY'S EPA I.D. NO.

TDX-000719518

X. FACILITY ADDRESS

2401 BATTLEFIELD Rd
DEER PARK TX.

XI. TRANSPORTATION SERVICES USED (List the name and EPA identification numbers of all transporters whose services were used during the reporting period. This section to be completed only once. Do not repeat on supplemental sheets.)

XII. WASTE IDENTIFICATION

Line #	A. Description of Waste	B. DOT Hazard Code	C. EPA Hazardous Waste No. (see instructions)	D. Amount of Waste	E. Unit of Measure
1	CORROSIVE LIQUID	OZ	P-020	44.7	T.
2					
3					
4					
5					
6					
7					
8					
9					
10					
11					
12					

XIII. COMMENTS (enter information by section number - see instructions)

MISSISSIPPI DEPARTMENT OF NATURAL RESOURCES

GENERATOR ANNUAL HAZARDOUS WASTE REPORT (CONT.)

This report is for the calendar year ending 12-31-83

VII. GENERATOR'S EPA I.D. NO.

MSD 990714081

VIII. FACILITY NAME (specify facility to which all wastes on this page were shipped)

GIBRALTAR WASTE WATERS INC.

IX. FACILITY'S EPA I.D. NO.

TXD 000742304

X. FACILITY ADDRESS

P.O. BOX 248
WINONA TX. 75792

XI. TRANSPORTATION SERVICES USED (List the name and EPA identification numbers of all transporters whose services were used during the reporting period. This section to be completed only once. Do not repeat on supplemental sheets.)

XII. WASTE IDENTIFICATION

Line #	A. Description of Waste	B. DOT Hazard Code	C. EPA Hazardous Waste No. (see instructions)	D. Amount of Waste	E. Unit of Measure
1	CORROSIVE LIQUID POISON NOS	OZ	P-020	10488.7	T.
2					
3					
4					
5					
6					
7					
8					
9					
10					
11					
12					

XIII. COMMENTS (enter information by section number - see instructions)

MISSISSIPPI DEPARTMENT OF NATURAL RESOURCES

GENERATOR ANNUAL HAZARDOUS WASTE REPORT (CONT.)

This report is for the calendar year ending 12-31-83

VII. GENERATOR'S EPA I.D. NO.

MSD 990714081

VIII. FACILITY NAME (specify facility to which all wastes on this page were shipped)

CHEMICAL WASTE MANAGEMENT

IX. FACILITY'S EPA I.D. NO.

ALD 000672464

X. FACILITY ADDRESS

EMELLE ALA. 35459

XI. TRANSPORTATION SERVICES USED (List the name and EPA identification numbers of all transporters whose services were used during the reporting period. This section to be completed only once. Do not repeat on supplemental sheets.)

XII. WASTE IDENTIFICATION

Line #	A. Description of Waste	B. DOT Hazard Code	C. EPA Hazardous Waste No. (see instructions)	D. Amount of Waste	E. Unit of Measure
1	MSMA SALT CAKE		K-031	925.15	T.
2					
3					
4					
5					
6					
7					
8					
9					
10					
11					
12					

XIII. COMMENTS (enter information by section number - see instructions)

RECEIVED
NOV 12 1986
DEPT. OF NATURAL RESOURCE
BUREAU OF POLLUTION CONTROL

ATTACHMENT F-2

FACILITY ANNUAL HAZARDOUS WASTE REPORT

This report is for the calendar year ending December 31, 1983

I. FACILITY EPA I.D. NUMBER

MSD 990714081

II. NAME OF FACILITY

VERTAC CHEMICAL CORP. VICKSBURG MS PLANT

III FACILITY MAILING ADDRESS

P.O. BOX 3
Street or P. O. Box

VICKSBURG — MS — 39180
City or Town — State — Zip Code

IV LOCATION OF FACILITY (if different than section III above)

Street or Route number

City or Town — State — Zip Code

V. FACILITY CONTACT

MARAMAN ROBERT F.
Name (last and first)

601-636-1231
Phone No. (area code & no.)

VI. COST ESTIMATES FOR FACILITIES

$ 33,500
Cost Estimate for Facility Closure

$ 15 000 (1983 ESTIMATES)
Cost Estimate for Post Closure Monitoring & Maintenance (disposal facilities only)

VII. CERTIFICATION

I certify under penalty of law that I have personally examined and am familiar with the information submitted in this and all attached documents, and that based on my inquiry of those individuals immediately responsible for obtaining the information, I believe that the submitted information is true, accurate, and complete. I am aware that there are significant penalties for submitting false information, including the possibility of fine and imprisonment.

R.F. MARAMAN — CHIEF CHEMIST — R.F. Maraman — 5-4-84
Print/Type Name — Title — Signature of Authorized Representative — Date

MISSISSIPPI DEPARTMENT OF NATURAL RESOURCES

FACILITY ANNUAL HAZARDOUS WASTE REPORT (CONT.)

This report is for the calendar year ending December 31, 1983

VIII. FACILITY'S EPA I.D. NO.

MSD 990714081

IX. GENERATOR'S EPA I.D. NO.

MSD 990714081

X. GENERATOR NAME (specify generator from whom all wastes on this page were received)

VERTAC CHEMICAL CORP.
VICKSBURG MS. PLANT.

XI. GENERATOR ADDRESS

P.O. BOX 3
VICKSBURG MS. 39180

XII. TOTAL WASTE IN STORAGE ON DECEMBER 31, 1983
(Complete this section only once for your facility; see section XII of instructions for 1983 changes)

	Amt. of Waste	UOM
S01		
S02	6840.45	T
S03		
S04		
S05		

XIII. WASTE IDENTIFICATION

Line #	A. Description of Waste	B. EPA Hazardous Waste No. (see instructions)	C. Handling Method	D. Amount of Waste	E. Unit of Measure
1	NEUTRALIZED DNBP PLANT LIQUID WASTE	P-020	T-49	5281.2	T
2					
3					
4					
5					
6					
7					
8					
9					
10					
11					
12					

XIV. COMMENTS (enter by section number - see instructions)

WELL WATER DATA

WELL NO	TOP OF CASING MSL	WATER LEVEL MSL 5-12-82	3-4-83	3-15-83	2-7-84	2-9-84
1	109.1	104.4	106.0	105.1	105.1	-
2	105.0	96.6	100.5	97.8	101.0	-
3	97.5	88	95.3	-	-	-
4	111.6	106.1	-	-	-	106.4
5	99.6	-	89.6	89.1	85.1	-
6	98.6	-	90.6	89.9	87.0	-
7	97.5	-	94.5	94.3	94.2	-
8	109.7	-	102.7	103.7	102.9	-

WELL I.D. 1

GROUP 1 INORGANICS	December 1981	April 1982	October 1982	January 1983	June 1983
Arsenic	0.015	0.003	--	--	
Barium	0.364	0.103	0.170	0.926	
Cadmium	0.003	--	0.006	0.023	
Chromium	0.019	0.61	0.044	0.059	
Flouride	0.680	0.42	0.650	0.690	
Lead	0.007	0.024	0.048	0.063	
Mercury	--	--	0.014	0.003	
Nitrate	0.250	0.18	0.15	0.280	
Selenium	--	0.006	--	0.017	
Silver	0.001	0.006	0.021	0.001	
Organics					
Endrin	--	--	--	--	
Lindane	--	0.001	--	--	
Methoxychlor	--	--	--	--	
Toxaphene	--	--	--	--	
2,4-D	0.00006	--	--	--	
2,4,5-TP Silvex	--		--	--	
Radiochemistry					
Gross Alpha	6.3±1.0	--	3.3±1.2	6.0±2	
Gross Beta	12.7±3.1	6.2±3.0	16.0±3.6	46.5±3	
Total Radium	--	--	--	--	
Others					
Turbidity	7.4	5.0	1.9	1.1	
Total Coliform	--	2	2	2	
GROUP 2					
Chloride	65.9	76.0	80.9	88	98
Iron	0.14	0.30	--	0.24	--
Manganese	0.57	0.73	0.33	0.48	0.39
Sodium	87.6	92.3	82.3	123	89.9
Sulfate	89.8	82.4	82.7	100	86.0
Phenols	--	0.05	1.28	0.28	0.12
GROUP 3					
pH	7.5	7.14	7.12	6.98	7.6, 7.58, 7.6, 7.62
Specific Conductance	3600	3350	4100	3900	4100, 4100, 4150, 4200
Total Organic Carbon	41.37	63.49	64.59	59.85	47.15,47.68,48.19,47.97
Total Organic Halogen	0.12	0.20	0.11	0.11	0.148,0.136,0.144,0.152

WELL I.D. 2

GROUP 1 INORGANICS	December 1981	April 1982	October 1982	January 1983	June 1983
Arsenic	--	0.003	--	0.002	
Barium	0.560	0.090	--	0.688	
Cadmium	0.002	--	0.003	0.005	
Chromium	--	0.004	--	--	
Flouride	0.40	0.36	0.50	0.50	
Lead	--	--	0.05	--	
Mercury	--	--	0.01	0.0047	
Nitrate	1.50	0.86	0.36	1.0	
Selenium	0.033	--	--	0.015	
Silver	0.0003	0.005	0.0079	0.0008	
Organics					
Endrin	--	--	--	--	
Lindane	--	--	--	--	
Methoxychlor	--	--	--	--	
Toxaphene	--	--	--	--	
2,4-D	0.0002	--	--	--	
2,4,5-TP Silvex	--	--	--	--	
Radiochemistry					
Gross Alpha	1.85±1.00	--	--	--	
Gross Beta	9.71±3.05	2.5±3.0	23.8±3.7	33.6±3.6	
Total Radium	--	--	--	--	
[illegible]ers					
[illegible]bidity	5.2	2.5	3.1	1.8	
Total Coliform	--	1	1	3	
GROUP 2					
Chloride	42.0	48.0	54.9	54	45
Iron	0.2	0.15	0.03	0.47	--
Manganese	1.18	0.32	0.04	0.79	--
Sodium	33.8	36.8	31.3	34	28.6
Sulfate	112.9	32.4	181.6	112	105.9
Phenols	--	--	1.15	0.08	--
GROUP 3					
pH	7.51	7.17	7.12	7.02	7.75, 7.76, 7.74, 7.75
Specific Conductance	990	880	1,300	990	1100, 1100, 1050, 1100
Total Organic Carbon	39.56	86.77	85.23	67.65	59.35, 59.03, 60.05, 60.
Total Organic Halogen	0.062	1.076	0.022	0.021	--, --, --, --

WELL I.D. 3

GROUP 1 ORGANICS	December 1981	April 1982	October 1982	January 1983
Arsenic	0.003	0.0048	--	0.018
Barium	0.704	0.144	0.049	0.647
Cadmium	0.0005	--	0.0009	--
Chromium	--	--	--	--
Flouride	0.44	0.42	0.35	0.4
Lead	0.0027	--	0.0479	--
Mercury	--	--	--	0.0025
Nitrate	0.22	0.24	0.13	0.95
Selenium	0.0295	0.0012	--	--
Silver	0.00045	0.0053	0.0147	0.00057
Organics				
Endrin	--	--	--	--
Lindane	--	--	--	--
Methoxychlor	--	--	--	--
Toxaphene	--	--	--	--
2,4-D	--	--	--	--
2,4,5-TP Silvex	--	--	--	--
Radiochemistry				
Gross Alpha	0.93±0.94	--	1.9±1.1	--
Gross Beta	5.18±3.02	1.0±2.8	14.2±3.6	28.4±4.3
Total Radium	--	--	--	--
((ers				
Turbidity	450	5.0	2.3	1.8
Total Coliform		2	3	1

Turbidity Readings for Wells 3 & 4 in Dec. 81 are not consistent. Cast out in statistical analysis. RWK 8/2/83

GROUP 2				
Chloride	5.0	10.0	13.9	24.0
Iron	1.92	0.37	--	1.20
Manganese	8.65	9.21	1.64	8.40
Sodium	22.1	23.1	16.6	31.0
Sulfate	18.1	51.2	147.9	178.0
Phenols	--	--	1.25	--

GROUP 3				
pH	7.2	6.6	7.09	6.77
Specific Conductance	920	980	860	1300
Total Organic Carbon	43.89	120.7	91.46	76.22
Total Organic Halogen	0.034	0.033	0.006	0.024

WELL I.D. 4 Upstream

GROUP 1	December, 1981	April, 1982	October, 1982	January, 1983	June, 1983	July, 1983
Inorganics						
Arsenic	--	0.0039	--	0.0089	--	--
Barium	0.292	0.103	0.142	0.366	0.048	0.82
Cadmium	0.0002	--	0.0015	--	0.0007	0.0012
Chromiun	--	0.009	--	--	--	0.002
Fluoride	0.40	0.30	0.50	0.60	0.55	0.50
Lead	0.0017	--	0.041	--	0.0039	--
Mercury	--	0.099	0.007	0.0024	--	--
Nitrate	0.15	0.11	1.1	0.57	1.8	1.5
Selenium	0.0351	--	--	0.0026	0.0079	0.0068
Silver	--	--	0.006	0.00095	--	--
Organics						
Endrin	--	--	--	--	--	--
Lindane	--	--	--	--	--	--
Methoxychlor	--	--	--	--	--	--
Toxaphene	--	--	--	--	--	--
2,4-D	--	--	--	--	--	--
2,4,5-TP Silvex	--	--	--	--	--	--
Radiochemistry						
Gross Alpha	1.34±.97	--	3.3±1.2	--	--	NA
Gross Beta	3.28±2.98	1.0±2.8	14.6±3.6	34.6±4.4	--	NA
Total Radium	0.14	--	--	--	--	NA
Others						
Turbidity	325	8.5	1.9	1.2	3	3
Total Coliform	--	--	1	5	11	NA
Group 2						
Chloride	14.0	22.0	21.9	23	15	15
Iron	0.66	0.26	--	0.27	--	1.04
Manganese	0.80	0.23	1.37	0.27	--	0.22
Sodium	24.3	25.2	20.8	33	17.4	15.2
Sulfate	54.4	71.2	92.4	132	59.2	56.9
Phenols	0.05	--	1.11	--	--	0.8
Group 3						
[illegible]	7.26, 7.31, 7.24, 7.21	6.72, 6.70, 6.69, 6.69	-6.92,6.94,6.94, 6.96	6.89,6.86,6.93, 6.97	7.47,7.30, 7.36,7.40	6.95, 9.96,6.95,6.95
Specific Conductance	750, 800, 760, 760	770, 770, 770, 770	-1100, 1150,1200,1100	830, 850, 830, 840	820, 825, 830, 825	840,850,840,840
Total Organic Carbon	50.21, 50.28,50.15,50.96	71.40,72.42,68.60,71.71	-65.85,64.48,58.54,61.62	44.92, 41.44,40.79,41.49	59.10,57.00,56.44,59.67	30.75,33.42,32.83,32.33
Total Organic Halogen	0.030,0.026,0.030,0.028	0.029,0.028,0.025,0.027	-0.041,0.016,0.039,0.047	0.012,0.015,0.017,0.020	0.020,0.023, 0.020,0.018	0.014,0.015,0.022,0.015

Turbidity Readings for wells 3 & 4 in Dec. 81 are not consistent. Cast out in statistical analysis. RMC 8/2/83

GROUP 1 INORGANICS	Well 5 June 1983	Well 5 July 1983	Well 6 June 1983	Well 6 July 1983	Well 7 June 1983	Well 7 July 1983	Well 8 June 1983	Well 8 July 1983
Arsenic	—	0.0014	—	0.003	0.011	0.0424	—	0.0606
Barium	0.165	0.45	0.042	0.53	0.2	0.19	0.8	0.30
Cadmium	0.0005	0.0005	0.0056	0.0004	0.014	0.0001	0.0006	0.0005
Chromium	0.009	0.150	—	0.028	0.004	0.031	—	0.057
Flouride	0.45	0.40	0.80	0.30	0.60	0.25	0.50	0.60
Lead	—	0.0218	—	0.0209	—	0.0058	—	0.0043
Mercury	—	0.0009	—	—	—	0.0019	—	0.0133
Nitrate	2.6	2.6	3.0	3.0	1.3	0.5	2.2	0.4
Selenium	0.0064	0.0192	0.0037	0.0110	0.0028	0.0109	0.0055	0.0018
Silver	0.0005	—	0.0017	0.00049	—	—	—	0.00436
Organics								
Endrin	—		—		—		—	
Lindane	—		—		—		—	
Methoxychlor	—		—		—		—	
Toxaphene	—		—		—		—	
2,4-D	—		—		—		—	
2,4,5-TP Silvex	—		—		—		—	
Radiochemistry								
Gross Alpha	—	NA	—	NA	—	NA	—	NA
Gross Beta	—	NA	—	NA	—	NA	—	NA
Total Radium	—	NA	—	NA	—	NA	—	NA
Others								
Turbidity	16	30	8	7	9	5	64	38
Total Coliform	—	NA	—	NA	—	NA	—	NA
GROUP 2								
Chloride	44	42	24	25	11	10	20	19
Iron	—	0.94	—	0.98	—	29.4	—	0.49
Manganese	0.18	0.45	—	—	0.05	0.59	5.74	0.16
Sodium	30.8	64.2	32.2	68.0	18.9	18.5	31.4	64.9
Sulfate	95.7	89.3	68.7	60.0	6.6	28.0	11.8	41.0
Phenols	0.06	0.7	—	0.65	—	0.7	0.05	0.45
GROUP 3								
pH	6.95	7.50	7.10	6.98	7.33	7.24	6.95	6.82
Specific Conductance	1500	1580	1510	1700	780	810	1200	1200
Total Organic Carbon	76.42	33.98	71.89	70.17	64.86	49.53	103.6	105.3
Total Organic Halogen	0.085	0.036	0.042	0.090	0.024	0.044	0.364	0.379

RECEIVED
NOV 12 1986
DE[illegible] NATURAL RESOURCE
BUREAU OF POLLUTION CONTROL

ATTACHMENT G

Do not make entries in shaded areas. OMB #: 2050-0024 Expires: 5-31-88

ENVIRONMENTAL PROTECTION AGENCY

FACILITY BIENNIAL HAZARDOUS WASTE REPORT FOR 1985

This report is for the calendar year ending December 31, 1985
Read All Instructions Carefully Before Making Any Entries on Form

I. NON-REGULATED STATUS

See instructions before completing this section.

This facility did not treat, store, or dispose of regulated quantities of hazardous waste at any time during 1985. . . . . ☐

Explain your non-regulated status in the space below.

II. FACILITY EPA I.D. NUMBER

T/A C

[redacted] M S D 9 9 0 7 1 4 0 8 1 [redacted]
1 2 13 14 15

This Facility's Non-Regulated Status is Expected to Apply:

☐ For 1985 Only ☐ Permanently

☐ Other _____

III. NAME OF FACILITY

V E R T A C C H E M I C A L C O R P O R A T I O N
30 69

IV. FACILITY MAILING ADDRESS

[redacted] P O B O X 3
15 16 45
Street or P.O. Box

[redacted] V I C K S B U R G | M S | 3 9 1 8 0
15 16 | 41 42 | 47 51
City or Town | State | Zip Code

V. LOCATION OF FACILITY (if different than section IV above)

[redacted] R I F L E R A N G E R D
15 16 45
Street or Route number

[redacted] V I C K S B U R G | M S | 3 9 1 8 0
15 16 | 41 42 | 47 51
City or Town | State | Zip Code

VI. FACILITY CONTACT

[redacted] H I L L , J O H N
15 16 45
Name (last and first)

6 0 1 - 6 3 6 - 1 2 3 1
46 55
Phone No. (area code & no.)

VII. COST ESTIMATES FOR FACILITIES

$ 1 0 0 8 0 0 0 | $, 2 0 6 , 1 0 0
16 19 22 | 25 28 31

A. Cost Estimate for Facility Closure

B. Cost Estimate for Post Closure Monitoring and Maintenance (disposal facilities only)

VIII. CERTIFICATION

I certify under penalty of law that I have personally examined and am familiar with the information submitted in this and all attached documents, and that based on my inquiry of those individuals immediately responsible for obtaining the information, I believe that the submitted information is true, accurate, and complete. I am aware that there are significant penalties for submitting false information, including the possibility of fine and imprisonment.

F. Ahlers	Plant Manager	F. Ahlers/HDM	2/26/86
Print/Type Name	Title	Signature of Authorized Representative	Date Signed

Tear out here

Do not make entries in shaded areas

ENVIRONMENTAL PROTECTION AGENCY

Facility Biennial Hazardous Waste Report for 1985 (cont.)

This report is for the calendar year ending December 31, 1985

Date rec'd: _____ Rec'd by: _____

IX. FACILITY'S EPA I.D. NO. T/A C

M S D 9 9 0 7 1 4 0 8 1

X. GENERATOR'S EPA I.D. NO.

M S D 9 9 0 7 1 4 0 8 1

XI. GENERATOR NAME (specify generator from whom all wastes on this page were received)

Vertac Chemical Corp. ON-SITE ☒

XII. GENERATOR ADDRESS

XIII. TOTAL WASTE IN STORAGE ON DECEMBER 31, 1985 (complete this section only once for your facility)

S01 [ ] AMOUNT OF WASTE [ ] UOM

S02 [2 2 9 0] AMOUNT OF WASTE [T] UOM

S03 [ ] AMOUNT OF WASTE [ ] UOM

S04 [S E E B E L O W] AMOUNT OF WASTE [ ] UOM

S05 [ ] AMOUNT OF WASTE [ ] UOM

XIV. WASTE IDENTIFICATION AND MANAGEMENT

Line #	A. Description of Waste	B. EPA Hazardous Waste No. (see instructions)	C. Handling Method	D. Amount of Waste	E. Unit of Measure
1	Rain and process water from plant general incl. DNBP mfg.	P 0 2 0 / D 0 0 2	T 0 4	5 5 0 0 0 0 0	T
2	Dinitro Butyl Phenol washwater waste corrosive liquid	P 0 2 0 / D 0 0 2	T 0 4	2 9 8	T
3					
4					
5					
6					
7					
8					
9					
10					
11					
12					

XV. COMMENTS (enter information by section number—see instructions)

S04 - Surface impoundment stopped receiving hazardous waste on 11/7/85. This is also reflected in item XIV, line 1, where the amount of rain/process waste listed includes material through Nov. 7. Rainwater and other non-hazardous materials continued to enter S04 and be treated in T04.

Tear out here

Do not make entries in shaded areas

OMB # 2050-0024 Expires 5-31-88

ENVIRONMENTAL PROTECTION AGENCY

GENERATOR BIENNIAL HAZARDOUS WASTE REPORT FOR 1985

This report is for the calendar year ending December 31, 1985
Read All Instructions Carefully Before Making Any Entries on Form

I. NON-REGULATED STATUS

Complete this section only if you did not generate regulated quantities of hazardous waste at any time during the 1985 calendar year. Circle the one code at right that best describes your status during the entire year (see instructions for explanation of codes).

1 Non-handler
2 Small Quantity Generator
4 Exempt
5 Beneficial Use
9 Out of Business

Please print/type with elite type (12 characters per inch)

This Installation's Non-Regulated Status is Expected to Apply:

☐ For 1985 Only ☐ Permanently

☐ Other _____

C303 ENTRY (OFFICIAL USE ONLY): ☐

II. GENERATOR'S EPA I.D. NUMBER

T/A C

F M S D 9 9 0 7 1 4 0 8 1 F 1
1 2 13 14 15

III. NAME OF ESTABLISHMENT

VERTAC CHEMICAL CORPORATION
30 69

IV. ESTABLISHMENT MAILING ADDRESS

3 PO BOX 3
15 16 45
Street or P.O. Box

4 VICKSBURG MS 39180
15 16 41 42 47 51
City or Town State Zip Code

V. LOCATION OF ESTABLISHMENT (if different than section IV above)

5 RIFLE RANGE ROAD
15 16 45
Street or Route number

6 VICKSBURG MS 39180
15 16 41 42 47 51
City or Town State Zip Code

VI. ESTABLISHMENT CONTACT

7 HILL, JOHN
15 16 45
Name (last and first)

601-636-1231
46 55
Phone No. (area code & no.)

VII. CERTIFICATION

I certify under penalty of law that I have personally examined and am familiar with the information submitted in this and all attached documents, and that based on my inquiry of those individuals immediately responsible for obtaining the information, I believe that the submitted information is true, accurate, and complete. I am aware that there are significant penalties for submitting false information, including the possibility of fine and imprisonment.

F. AHLERS	PLANT MANAGER	F. Ahlers /JDM	2/26/86
Print/Type Name	Title	Signature	Date Signed

EPA Form 8700-13A(5-80) (Revised 11-85)

Tear out here

Do not make entries in shaded areas

ENVIRONMENTAL PROTECTION AGENCY

Generator Biennial Hazardous Waste Report for 1985 (cont.)

This report is for the calendar year ending December 31, 1985

Date rec'd: _____ Rec'd by: _____

VIII. GENERATOR'S EPA I.D. NO.

T/A C

G M S D 9 9 0 7 1 4 0 8 1 1 1

1 2 13 14 15

IX. FACILITY NAME (specify facility to which all wastes on this page were shipped)

X. FACILITY'S EPA I.D. NO.

K Y D 0 0 5 0 0 9 9 2 3

16 28

XI. FACILITY ADDRESS

Calgon Carbon Corp.
Rt. 23S
Catlettsburg, KY 41120

XII. TRANSPORTATION SERVICES USED

Calgon Carbon Corporation PAD004319810

XIII. WASTE IDENTIFICATION

Sequence #	Line #	A. Description of Waste	B. DOT Hazard Code	C. EPA Hazardous Waste No. (see instructions)		D. Amount of Waste	E. Unit of Measure
1 32	1	Activated carbon from adsorption of Dinoseb washwater.	1 8 (33 34)	P 0 2 0 (35 38)	(39 42)	2 7 0 (51 59)	T (60)
	2						
	3						
	4						
	5						
	6						
	7						
	8						
	9						
	10						
	11						
	12						

XIV. COMMENTS (enter information by section number—see instructions)

Carbon is returned for reactivation and re-use.

Tear out here

Do not make entries in shaded areas

ENVIRONMENTAL PROTECTION AGENCY

Generator Biennial Hazardous Waste Report for 1985 (cont.)

This report is for the calendar year ending December 31, 1985

Date rec'd: _____ Rec'd by: _____

VIII. GENERATOR'S EPA I.D. NO.

T A C

G M S D 9 9 0 7 0 4 0 8 0 1 1 1

1 2 13 14 15

IX. FACILITY NAME (specify facility to which all wastes on this page were shipped)

X. FACILITY'S EPA I.D. NO.

A L D 0 0 0 6 2 2 4 6 4

16 28

XI. FACILITY ADDRESS

Chemical Waste Management Inc.
Emelle Facility
Alabama Highway 17 @ Mile 163
Emelle, Alabama 35459

XII. TRANSPORTATION SERVICES USED

Chemical Waste Management Inc.: ALD000622464

XIII. WASTE IDENTIFICATION

Sequence # (29–32)	Line #	A. Description of Waste	B. DOT Hazard code (33–34)	C. EPA Hazardous Waste No. (see instructions) (35–38, 39–42, 43–46, 47–50)	D. Amount of Waste (51–59)	E. Unit of Measure (60)
	1	Hazardous Waste Liquid	1 5	D 0 0 0	7 0 0	P
	2	Waste Flamable Liquid	0 8	D 0 0 1	1 0 0 0	P
	3	Waste Corrosive Liquid	0 2	D 0 0 2	7 0 0	P
	4	Waste Poison B-Solid	1 8	P 0 4 7 P 0 6 4	7 0 0	P
	5	Waste Flamable Liquid	0 8	D 0 0 1	5 0 0	P
	6	Waste Flamable Solid	0 9	0 0 0 1	6 0	P
	7	Waste Corrosive Liquid	0 2	D 0 0 2	9 0	P
	8	Waste Corrosive Solid	0 2	D 0 0 2	3 0	P
	9	Waste Isopropylamine	0 8	D 0 0 1	3 6 5	P
	10	Hazardous Waste Solid	1 5	P 1 2 3	7 0 0	P
	11					
	12					

XIV. COMMENTS (enter information by section number—see instructions)

These wastes are a result of a general laboratory chemical storage shed clean-up.

Tear out here

Do not make entries in shaded areas

ENVIRONMENTAL PROTECTION AGENCY

Generator Biennial Hazardous Waste Report for 1985 (cont.)

This report is for the calendar year ending December 31, 1985

Date rec'd: _____ Rec'd by: _____

VIII. GENERATOR'S EPA I.D. NO.

T/A C

G M S D 9 9 0 7 1 4 0 8 1 1 1

1 2 13 14 15

IX. FACILITY NAME (specify facility to which all wastes on this page were shipped)

X. FACILITY'S EPA I.D. NO.

T X D 0 9 1 2 7 0 0 1 7

16 28

XI. FACILITY ADDRESS

CECOS/ ODESSA FACILITY
2407 E. Murphy St.
Odessa, TX

XII. TRANSPORTATION SERVICES USED

Service Truck Lines LAD043195379

XIII. WASTE IDENTIFICATION

Sequence # (29–32)	Line #	A. Description of Waste	B. DOT Hazard code (33–34)	C. EPA Hazardous Waste No. (see instructions) (35–38, 39–42, 43–46, 47–50)	D. Amount of Waste (51–59)	E. Unit of Measure (60)
	1	Waste flammable liquid from manufacture of DEHPA.	0 8	D 0 0 1	2 3 3	T
	2					
	3					
	4					
	5					
	6					
	7					
	8					
	9					
	10					
	11					
	12					

Tear out here

XIV. COMMENTS (enter information by section number—see instructions)

Do not make entries in shaded areas

ENVIRONMENTAL PROTECTION AGENCY

Generator Biennial Hazardous Waste Report for 1985 (cont.)

This report is for the calendar year ending December 31, 1985

Date rec'd: _____ Rec'd by: _____

VIII. GENERATOR'S EPA I.D. NO.

G M S D 9 9 0 7 1 4 0 8 1 (T/A C) 1
1 2 13 14 15

IX. FACILITY NAME (specify facility to which all wastes on this page were shipped)

X. FACILITY'S EPA I.D. NO.

E L A D 0 0 0 6 1 8 2 9 8
16 28

XI. FACILITY ADDRESS

CECOS International
Corner I 12 & LA Hwy 63
Livingston, LA 70754

XII. TRANSPORTATION SERVICES USED

CECOS International LAD000618298

XIII. WASTE IDENTIFICATION

Sequence #	Line #	A. Description of Waste	B. DOT Hazard code	C. EPA Hazardous Waste No. (see instructions)		D. Amount of Waste	E. Unit of Measure
29 32	1	Crushed cans containing trace of Dinoseb	1 8 (33 34)	P 0 2 0 (35 38)	(39 42)	3 (51 59)	T (60)
	2						
	3						
	4						
	5						
	6						
	7						
	8						
	9						
	10						
	11						
	12						

Tear out here

XIV. COMMENTS (enter information by section number—see instructions)

Do not make entries in shaded areas

ENVIRONMENTAL PROTECTION AGENCY

Generator Biennial Hazardous Waste Report for 1985 (cont.)

This report is for the calendar year ending December 31, 1985

Date rec'd _____ Rec'd by _____

VIII. GENERATOR'S EPA I.D. NO.

G M S D 9 9 0 7 1 4 0 8 1 1 (1 2 13 14 15)

IX. FACILITY NAME (specify facility to which all wastes on this page were shipped)

X. FACILITY'S EPA I.D. NO.

F L A D 0 0 0 7 7 8 5 1 R (16 28)

XI. FACILITY ADDRESS

Rollins Environmental Services of LA.
Iberville Parish Deep Well
Bayou Sorrell, LA 70764

XII. TRANSPORTATION SERVICES USED

Matlack Inc. PAD046548756

XIII. WASTE IDENTIFICATION

Sequence #	Line #	A. Description of Waste	B. DOT Hazard code	C. EPA Hazardous Waste No. (see instructions)	D. Amount of Waste	E. Unit of Measure
29 32	1	Waste corrosive liquid from manufacturing of DEHPA	0 2 (33 34)	D 0 0 2 (35 38) (39 42) (43 46) (47 50)	2 2 3 0 (51 59)	T (60)
	2	Dinitro Butyl Phenol washwater, waste corrosive liquid	0 2	D 0 0 2	5 5 3 5	T
	3					
	4					
	5					
	6					
	7					
	8					
	9					
	10					
	11					
	12					

Tear out here

XIV. COMMENTS (enter information by section number—see instructions)

Do not make entries in shaded areas

ENVIRONMENTAL PROTECTION AGENCY

Generator Biennial Hazardous Waste Report for 1985 (cont.)

This report is for the calendar year ending December 31, 1985

Date rec'd. _____ Rec'd by _____

VIII. GENERATOR'S EPA I.D. NO.

T.A.C.

GMSD990714081 1 1

1 2 13 14 15

IX. FACILITY NAME (specify facility to which all wastes on this page were shipped)

X. FACILITY'S EPA I.D. NO.

FOKD000402396

16 28

XI. FACILITY ADDRESS

W. J. Lamberton Injection Well
2700 S. 25th W. Ave.
Tulsa, OK 74109

XII. TRANSPORTATION SERVICES USED

Illinois Central Gulf RR ILD000804443

Burlington Northern RR MND048341788

XIII. WASTE IDENTIFICATION

Sequence #	Line #	A. Description of Waste	B. DOT Hazard code	C. EPA Hazardous Waste No. (see instructions)	D. Amount of Waste	E. Unit of Measure
29 32	1	Dinitro Butyl Phenol washwater, waste corrosive liquid.	02 33 34	D002 35 38 39 42 43 46 47 50	10507 51 59	T 60
	2					
	3					
	4					
	5					
	6					
	7					
	8					
	9					
	10					
	11					
	12					

Tear out here

XIV. COMMENTS (enter information by section number—see instructions)

Do not make entries in shaded areas

ENVIRONMENTAL PROTECTION AGENCY

Generator Biennial Hazardous Waste Report for 1985 (cont.)

This report is for the calendar year ending December 31, 1985

Date rec'd: _____ Rec'd by: _____

VIII. GENERATOR'S EPA I.D. NO.

T A C

G M S D 9 9 0 7 1 4 0 8 1 1 1

1 2 13 14 15

IX. FACILITY NAME (specify facility to which all wastes on this page were shipped)

X. FACILITY'S EPA I.D. NO.

P A D 0 0 0 7 3 6 9 4 2

16 28

XI. FACILITY ADDRESS

Calgon Carbon Corp.
200 Neville Rd.
Newville Island, PA 15225

XII. TRANSPORTATION SERVICES USED

Calgon Carbon Corp. PAD 004319810

XIII. WASTE IDENTIFICATION

Sequence #	Line #	A. Description of Waste	B. DOT Hazard code	C. EPA Hazardous Waste No. (see instructions)		D. Amount of Waste	E. Unit of Measure
29 32	1	Activated Carbon from adsorb - tion of Dinoseb wastewater.	1 8 (33 34)	P 0 2 0 (35 38)	(39 42)	1 7 0 (51 59)	T (60)
	2						
	3						
	4						
	5						
	6						
	7						
	8						
	9						
	10						
	11						
	12						

Tear out here

XIV. COMMENTS (enter information by section number—see instructions)

Carbon is returned for reactivation and re-use.

Do not make entries in shaded areas

ENVIRONMENTAL PROTECTION AGENCY

Generator Biennial Hazardous Waste Report for 1985 (cont.)

This report is for the calendar year ending December 31, 1985

Date rec'd: _____ Rec'd by: _____

XV. GENERATOR'S EPA I.D. NO.

T/A C

G M S D 9 9 0 7 1 4 0 8 1 F 1

1 2 13 14 15

XVI. WASTE MINIMIZATION (narrative description)

Initial tests have been conducted to determine biotreatability of the wastewater generated during manufacturing of Dinoseb.

Tear out here

RECEIVED
NOV 12 1986
DEPT. OF NATURAL RESOURCE
BUREAU OF POLLUTION CONTROL

ATTACHMENT H

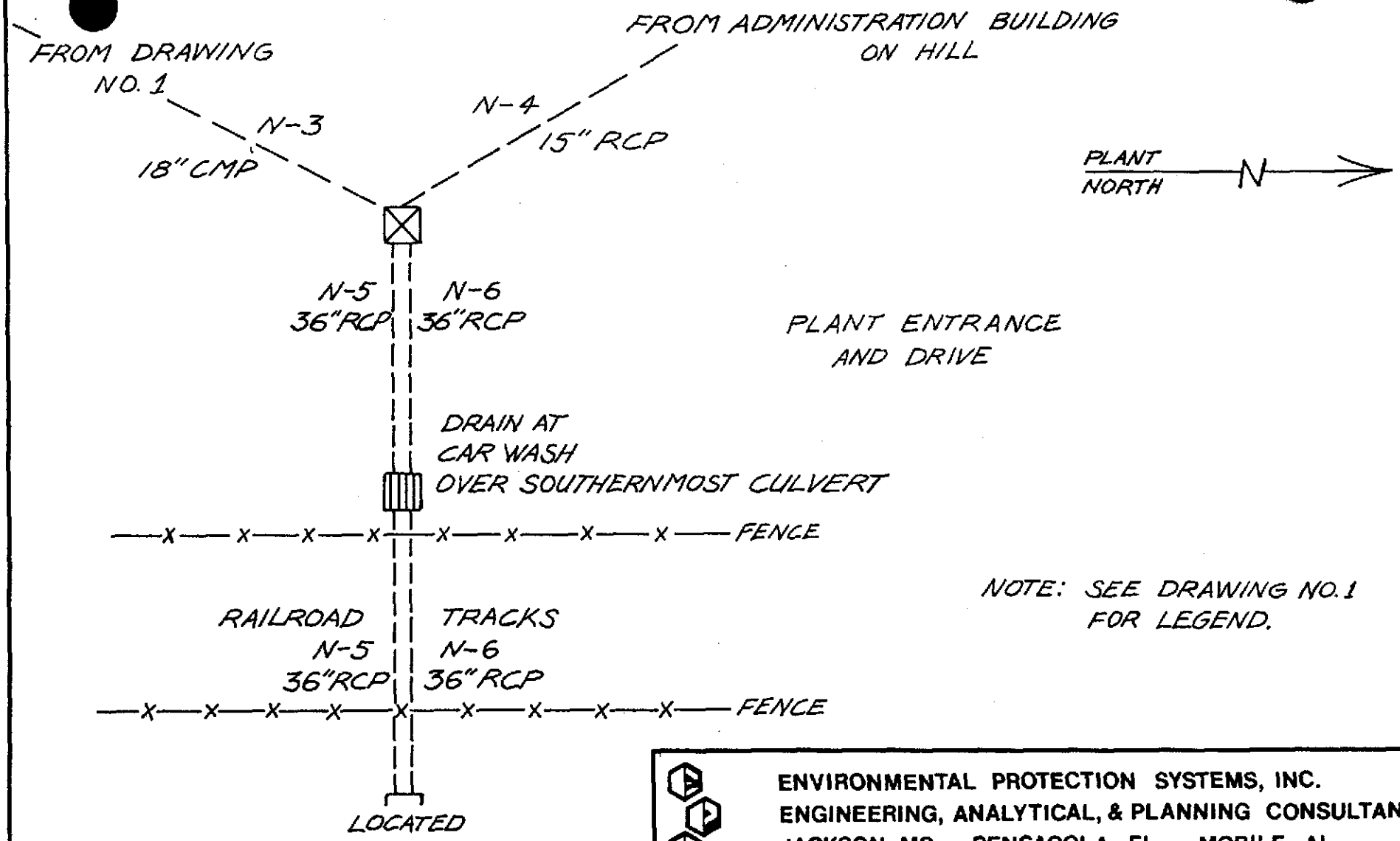

ENVIRONMENTAL PROTECTION SYSTEMS, INC.
ENGINEERING, ANALYTICAL, & PLANNING CONSULTANTS
JACKSON, MS PENSACOLA, FL MOBILE, AL

PROJECT TITLE: VERTAC SEWER SYSTEM MAP	
SCALE: 1"=40'	**DRAWN BY:** SJA
DATE: 12-13-85	**APPROVED BY:** JED
PROJECT NO.: 1.85.7953.02	**DRAWING NO.:** 2

RECEIVED
NOV 12 1986
DEPT. OF NATURAL RESOURCE
BUREAU OF POLLUTION CONTROL

ATTACHMENT I

VERTAC CHEMICAL CORPORATION
24th Floor • 5100 Poplar • Memphis, TN 38137 • 901-767-6851

REPLY TO: P. O. BOX 3
VICKSBURG, MS 39180
(601) 636-1231

February 18, 1983

Bureau of Pollution Control
Hazardous Waste Division
P.O. Box 10385
Jackson, MS 39209

Attention: Mr. Charles Estes

Subject: Report on Holding Pond Incident

In compliance with existing regulations the following report is submitted.

OWNER OF THE FACILITY:

Vertac Chemical Corporation
24th Floor, 5100 Poplar
Memphis, TN 38137
901-767-6851

NAME, ADDRESS AND TELEPHONE NUMBER OF THE FACILITY:

Vertac Chemical Corporation
Vicksburg, MS Plant
P.O. Box 3
Rifle Range Road
Vicksburg, MS 39180
601-636-1231

DATE, TIME AND TYPE OF INCIDENT:

February 5, 1983
Between midnight and 0800.
Fracture in the dike on the East side of the holding pond causing approximately 60% of same to empty into Stouts Bayou.

NAME AND QUANTITY OF MATERIALS INVOLVED:

Approximately 700,000 gallons of waste water containing an estimated 4 ppm Dinitro Butyl Phenol as the major toxic constituent.

EXTENT OF INJURIES:

None to personnel.

No apparent injury to fish, wildlife, or the environment as estimated from subsequent chemical analysis and inspection.

POTENTIAL HAZARDS:

A potential hazard existed to fish and wildlife, but was estimated to be minimal due to the immense volume of rain water run-off in the bayou.

It rained heavily before the fracture and continued to rain through 2-5-83 and until approximately noon on 2-6-83.

ESTIMATION - QUANTITY AND DISPOSITION OF RECOVERED MATERIAL:

Recovered material, estimated at two (2) yards of contaminated mud from the pond, was removed from the fracture repair area and placed back into the pond impoundment area.

In addition to the above, the following is a running account of events from February 5, 1983 through February 14, 1983:

1. 2-5-83 - Approximately 0830:

   Plant officials met at the fracture to assess the situation and determine possible hazards to human health and the environment.

   No hazards were apparent in the immediate vicinity nor did it appear that any evacuation would be necessary.

   Attention was turned to stopping the rain water run-off flowing to the creek. The pond consists of a settling section and a holding section separated by a finger dike except for a 6 foot section to allow effluent passage. Plans were made to first close the settling section, thus stopping the flow to the creek, then repair the fracture in the main dike.

   A contractor, Miller Construction, was called in to start the closing operation.

   The fracture was caused by the heavy rains in the area.

   Approximately 0900:

   The emergency response center was contacted. The situation was reported to Rick Sherrard and he contacted Steve Spengler.

   Approximately 1000:

   The bayou was inspected approximately two (2) miles South of the plant near MP&L. The bayou was muddy and approximately 10 foot deep.

   No fish kills or environmental damage was observed there or in the near by area.

   Meanwhile, Miller Construction had arrived at the plant and closed the finger dike, thus stopping any discharge to the fracture and into the creek.

   The DNBP Plant was shutdown, the Toxaphene Plant was not in operation, and the hill tank flow was stopped. At this time the plant effluent

consisted of rain water run-off.

Approximately 1300:

A return trip was made to the bayou near MP&L. The water had risen to near bank level but again no dead fish or apparent environmental damage was observed.

A creek sample was taken. The analysis was 0.4 ppm DNBP and 30 ppb Toxaphene.

Approximately 1600:

Heavy rain had set in.

Steve Spengler visited to inspect the fracture, and obtained samples of the pond bottom. Steve discussed several courses of action and outlined precautions to be taken.

Vertac also sampled the pond bottom. The analysis was 31.6 mg/Kilo DNBP and 132 mg/Kilo.

An emergency watch was set up to prevent leaks from the finger dike dam during the night.

2. 2-6-83:

Since the dike surrounding the pond was saturated from recent rains, it would not support heavy equipment. Therefore, Miller Construction started constructing a road across the "dry" mid section of the pond to reach the fracture. They worked 24 hours per day to reach the fracture.

Steve Spengler visited to review progress and meet with Vertac officials and Dick Karkkainen, the Environmental Manager.

At 1130 the bayou near MP&L was sampled. The analysis was less than 0.1 ppm DNBP and 5 ppb Toxaphene.

The bayou was bank full with water. No dead fish or environmental damage was observed.

3. 2-7-83:

Miller Construction reached and filled the fracture. Reinforcing dirt was placed for almost 15 feet North and South of the closed fracture.

Plans were formulated to extend the existing dike by extending the width to approximately 20 feet, the length of the pond on the East side.

A consultant, Gee-Strickland, arrived to observe repairs and make recommendations.

A 36 inch concrete pipe was placed in the new road allowing the dammed up water to flow to the effluent pumps.

Steve Spengler and Charles Estes collected additional samples and advised moving the contaminated mud that had oozed out from under the dirt fill. The mud was removed by Miller Construction and placed in the "dry" pond area.

During the night water started to breach the access road, but the emergency crew repaired the leak and prevented major damage.

Approximately 1130:

The bayou at MP&L was inspected and sampled. It was about 15 feet deep. No dead fish or environmental damage was observed.

The analysis was nil DNBP and less than 1 ppb Toxaphene.

4. 2-8-83:

A storm front was expected to arrive. It was anticipated that rain water would run from the South hill area into the "dry" portion. A diesel pump was brought in to pump the water into the containment section.

A nearby source of good dirt was located to be used to extend the East dike.

The rain started in the afternoon.

5. 2-9-83:

The rain became a 2 1/2 inch downpour. Run-off water broke through the access road, but the diesel pump kept the situation under control.

The rest of the evening was a holding action.

Stouts Bayou rose to within inches of the top of the fracture repair and sandbags were placed to prevent the bayou from running into the pond.

The repair held with only minor washing on the bayou side.

6. 2-10-83:

Access road and fracture repair brought up to proper elevation.

7. 2-11-83:

Progress continued in a North-South direction on the East dike extention and it was completed on 2-14-83.

Steve Spengler and Charles Estes visited to inspect the progress.

Approximately 1/2 the pond is operational with the remainder to be placed in service as soon as possible.

To this point Vertac has spent approximately $63,000 to repair the fracture.

The strategy to protect Vertac's repair investment is currently being discussed at the corporate level.

R. F. Maraman

R.F. MARAMAN
Chief Chemist

RFM/tsd

cc: Steve Spengler
R.F. Maraman
Effluent File
File

RECEIVED
NOV 12 1986
DEPT. OF NATURAL RESOURCE
BUREAU OF POLLUTION CONTROL

ATTACHMENT J

File

VICKSBURG CHEMICAL TOXAPHENE PROCESS

Camphene is chlorinated in the presence of solvent at elevated temperature to form technical Toxaphene. The hydrogen chloride is separated from the solvent and the latter is recovered and reused. The hydrogen chloride is dissolved in water and sold as hydrochloric acid. The technical Toxaphene is diluted to produce Toxaphene-90.

There was no process wastewater from the production of Toxaphene nor was there any wastewater treatment sludge generated in the Vicksburg Toxaphene Process. The wastewater associated with the subject plant originated in the HCl recovery system as a spent caustic solution from an HCl air emission scrubber.

See attached flow sheet.

TOXAPHENE SCHEMATIC

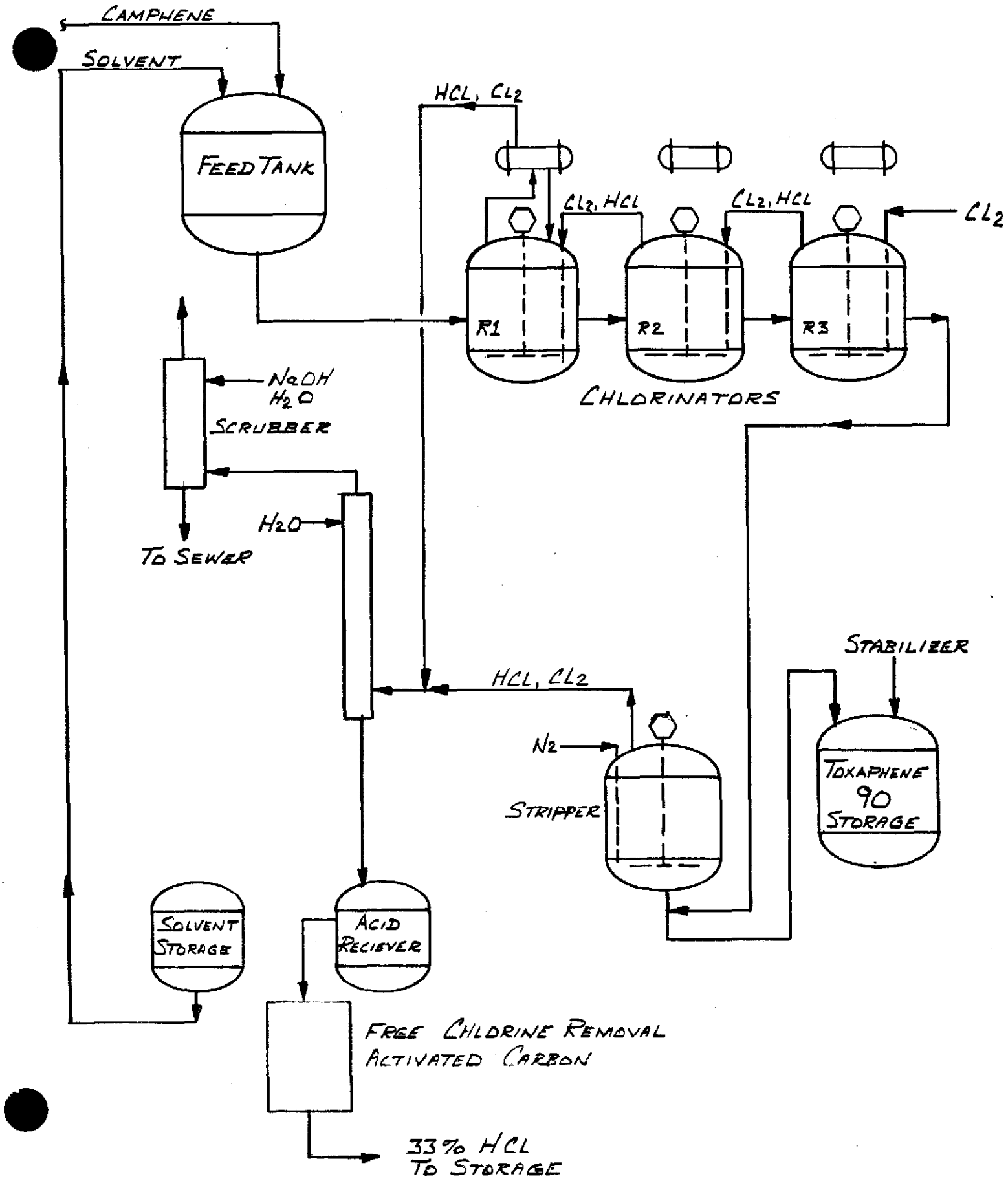

RECEIVED
NOV 12 1986
DEPT. OF NATURAL RESOURCE
BUREAU OF POLLUTION CONTROL

ATTACHMENT K

(3) Tisdale, W.H. and Williams, I., U.S. Patent 1,972,961, September 11, 1934, assigned to DuPont.

TOXAPHENE (CAMPHECHLOR IN U.K.)

Function: Insecticide (1)(2)(3)(4)

Chemical Name: Toxaphene

Formula:

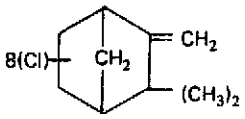

Trade Names: Hercules 3956 (Hercules, Inc.)
Alltox®
Estonox®
Chem-Phene®
Geniphene®
Gy-phene®
Phenacide®
Phenatox®
Toxadust®
Toxaspra®

Manufacture

The raw materials for toxaphene manufacture are camphene and chlorine and the reaction is approximately as follows:

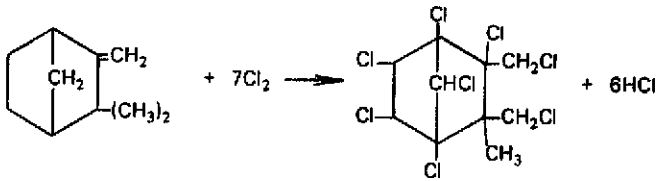

The initial reaction involving addition to the double bond is rapid while the second involving substitution proceeds with more difficulty, as pointed out by M.A. Phillips (5). The reaction temperature initially rises, due to the heat of reaction, to 85° to 90°C, and some cooling may be required. It then drops and may be 50° to 75°C at the end of the reaction. This chlorination reaction is carried out at atmospheric pressure. This reaction takes from 15 to 30 hours to reach completion. This reaction is carried out in the liquid phase using about 5 parts of carbon tetrachloride solvent per part of camphene feed, as described by G.A. Buntin (3)(4). Ultraviolet light is the catalyst for this reaction.

Lead-lined, glass-lined or nickel-clad vessels may be used for this reaction. The vessel should be equipped with a heat-exchange jacket, a reflux condenser and a well for the ultraviolet lamp. The carbon tetrachloride solvent is removed from the reaction product by distillation under reduced pressure after HCl and excess chlorine have been blown out. The residue from the distillation is allowed to solidify. A production and waste schematic for toxaphene manufacture is shown in Figure 54 (6).

Figure 54: Production and Waste Schematic for Toxaphene

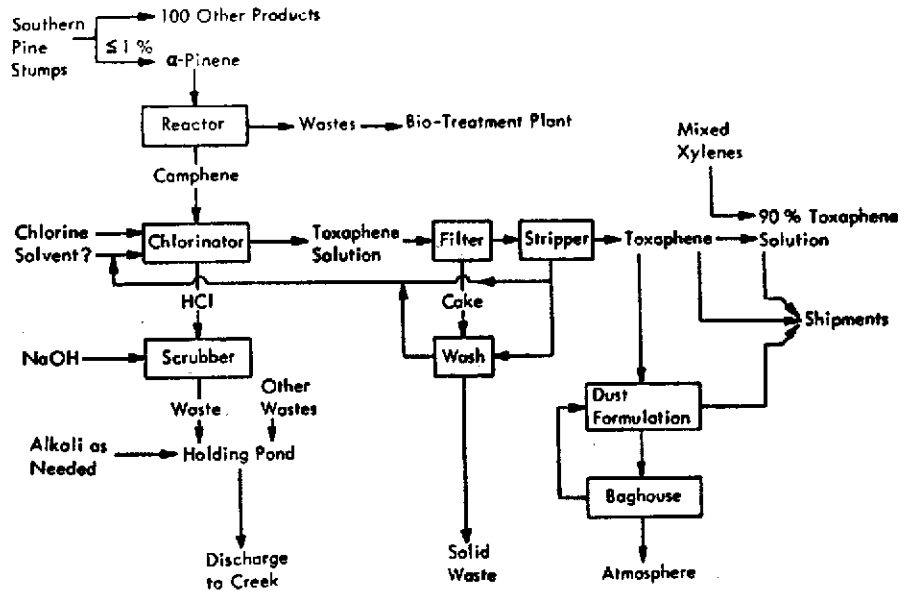

Source: Reference (6)

Sludge (?)

Process Wastes and Their Control

Air: Air emissions from toxaphene production have been reported (B-15) to consist of the following:

Component	Kilograms per Metric Ton Pesticide Produced
HCl	2.65
Cl_2	0.25
Toluene	1.0
Toxaphene	5×10^{-4}

Air pollution control in toxaphene manufacture involves the following (B-15):

Control Device	Emissions Controlled	Reported Efficiency
Alkali and water scrubber	Solvent vapor, hydrogen chloride, chlorine	—
Stripping	Solvent vapor, hydrogen chloride, chlorine	—
Limestone adsorption	Solvent vapor, hydrogen chloride, chlorine	100
Baghouse	Toxaphene	—

The chlorinator waste HCl gas passes through a water absorber and the resulting muriatic acid is recovered or neutralized and sent to wastewater treatment. The toxaphene product then goes either to a solution or to a dust formulation step. Emissions from the dust formulation are vented to a baghouse, with the captured dust then recycled to the formulation step (B-10).

Product Wastes: Toxaphene is said to dehydrochlorinate in the presence of alkali, upon

prolonged exposure to sunlight, and at temperatures of about 155°C. Reduction with sodium in isopropyl alcohol is the analytical method for total chloride (B-3).

Toxicity

The acute oral LD_{50} value for rats is 80 to 90 mg/kg which is moderately toxic.

Toxaphene is a widely used organochlorine insecticide that apparently has not caused a great deal of environmental harm, although it has been used in agriculture for many years. Because it is a complex mixture of uncharacterized camphene derivatives, very little is known about its metabolism in plants or other higher organisms. Considerable information is available, however, on its toxicity in laboratory animals and various aquatic organisms. An ADI of 0.00125 mg/kg/day was calculated on the basis of the chronic toxicity data (B-22).

A summary of the results of examination of over 100,000 samples of raw agricultural commodities by the FDA between 1963 and 1969 shows that toxaphene residues are seldom present. Thus, the possibility that large quantities of toxaphene residues could be found in drinking water is not great.

Toxaphene has demonstrated carcinogenic effects in laboratory animals. In addition, toxaphene is highly toxic to many aquatic invertebrate and vertebrate species and has been shown to cause the "broken back syndrome" in fish fry. These observations, together with reported bioconcentration factors as high as 91,000 indicate that toxaphene poses a threat to living organisms, particularly in the aquatic environment (B-26).

Allowable Limits on Exposure and Use

Air: The threshold limit value for chlorinated camphenes in air has been set at 0.5 mg/m^3 as of 1979. The tentative short term exposure limit is 1.0 mg/m^3 (B-23).

Water: In water, EPA set criteria (B-12) for toxaphene of 5 μg/l for domestic water supply and 0.005 μg/l for the protection of freshwater and marine aquatic life.

Subsequently, EPA has suggested (B-26) limits to protect freshwater aquatic life of 0.007 μg/l as a 24-hour average and the concentration should not exceed 0.47 μg/l at any time.

For toxaphene the criterion to protect saltwater aquatic life is 0.019 μg/l as a 24-hour average and the concentration should not exceed 0.12 μg/l at any time.

For the maximum protection of human health from the potential carcinogenic effects of exposure to toxaphene through ingestion of water and contaminated aquatic organisms, the ambient water concentration is zero. Concentrations of toxaphene estimated to result in additional lifetime cancer risks ranging from no additional risk to an additional risk of 1 in 100,000 have been determined by the EPA. The agency is considering setting criteria at an interim target risk level in the range of 10^{-5}, 10^{-6}, or 10^{-7} with corresponding criteria of 4.7×10^{-1} μg/l, 4.7×10^{-2} μg/l, and 4.7×10^{-3} μg/l, respectively (B-26).

Product Use: A rebuttable presumption against registration was issued on May 25, 1977 by EPA on the basis of oncogenicity and reductions in nontarget species.

In a notice dated February 14, 1969, the EPA (B-17) cancelled all uses of toxaphene products bearing directions for use on lettuce and cabbage except the following:

(1) Cabbage at application rates of 4.0 pounds actual/acre must have the warning statement "Do not apply after heads start to form."

(2) Lettuce at application rates of 5.0 pounds actual/acre must have the warning statement "Do not apply after seedling stage on leaf lettuce. Do not apply after [illegible] begin to form on head of lettuce."

The tolerances set by the EPA for toxaphene in or on raw agricultural commodities are as follows:

	40 *CFR* Reference	Parts per Million
Apples	180.138	7.0
Apricots	180.138	7.0
Bananas	180.138	3.0
Bananas, pulp	180.138	0.3
Barley	180.138	5.0
Beans	180.138	7.0
Blackberries	180.138	7.0
Boysenberries	180.138	7.0
Broccoli	180.138	7.0
Brussels sprouts	180.138	7.0
Cabbage	180.138	7.0
Carrots	180.138	7.0
Cattle, fat of meat	180.138	7.0
Cauliflower	180.138	7.0
Celery	180.138	7.0
Citrus fruits	180.138	7.0
Collards	180.138	7.0
Corn	180.138	7.0
Cotton, seed	180.138	5.0
Cranberries	180.138	7.0
Cucumbers	180.138	7.0
Dewberries	180.138	7.0
Eggplant	180.138	7.0
Goats, fat of meat	180.138	7.0
Hazelnuts	180.138	7.0
Hickory nuts	180.138	7.0
Hogs, fat of meat	180.138	7.0
Horseradish	180.138	7.0
Horses, fat of meat	180.138	7.0
Kale	180.138	7.0
Kohlrabi	180.138	7.0
Lettuce	180.138	7.0
Loganberries	180.138	7.0
Nectarines	180.138	7.0
Oats	180.138	5.0
Okra	180.138	7.0
Onions	180.138	7.0
Parsnips	180.138	7.0
Peaches	180.138	7.0
Peanuts	180.138	7.0
Pears	180.138	7.0
Peas	180.138	7.0
Pecans	180.138	7.0
Peppers	180.138	7.0
Pimentos	180.138	7.0
Pineapples	180.138	3.0
Quinces	180.138	7.0
Radishes, tops	180.138	7.0
Radishes, with tops	180.138	7.0
Radishes, without tops	180.138	7.0
Raspberries	180.138	7.0
Rice	180.138	5.0
Rutabagas	180.138	7.0
Rye	180.138	5.0
Sheep, fat of meat	180.138	7.0
Sorghum, grain	180.138	5.0
Soybeans, dry form	180.138	2.0
Spinach	180.138	[illegible]

(continued)

	40 *CFR* Reference	Parts per Million
Strawberries	180.138	7.0
Sunflower seeds	180.138	0.1
Tomatoes	180.138	7.0
Walnuts	180.138	7.0
Wheat	180.138	5.0
Youngberries	180.138	7.0

The tolerances set by the EPA for toxaphene in food are as follows (the *CFR* Reference is to Title 21):

	CFR Reference	Parts per Million
Soybean, oil, crude	193.450	12.0

References

(1) Worthing, C.R., *Pesticide Manual,* 6th ed., p. 76, British Crop Protection Council (1979).
(2) Spencer, E.Y., *Guide to the Chemicals Used in Crop Protection,* 6th ed., p. 506, London, Ontario, Agriculture Canada (January 1973).
(3) Buntin, G.A., U.S. Patent 2,565,471, August 28, 1951, assigned to Hercules Powder Co.
(4) Buntin, G.A., U.S. Patent 2,657,164, October 27, 1953, assigned to Hercules Powder Co.
(5) Phillips, M.A., *Brit. Chem. Eng.,* 10, No. 8, 550-51 (August 1965).
(6) Midwest Research Institute, *The Pollution Potential in Pesticide Manufacturing,* Washington, DC, Environmental Protection Agency (June 1972).

TRIADIMEFON

Function: Fungicide (1)(2)

Chemical Name: 1-(4-chlorophenoxy)-3,3-dimethyl-1-(1H-1,2,4-triazol-1-yl)-2-butanone

Formula:

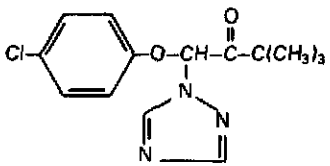

Trade Names: Bay Meb 6447 (Bayer AG)
Bayleton® (Bayer AG)

Manufacture (2)

35.8 grams (0.2 mol) of α-bromo-pinacolone in 50 ml of ethyl acetate were added dropwise to sodium 4-chlorophenolate which was prepared from 0.2 mol of 4-chlorophenol and 4.6 grams (0.2 mol) of sodium in 130 ml of absolute alcohol, and the mixture was heated to the boil overnight. Thereafter the sodium bromide produced was filtered off hot, the filtrate was distilled in vacuo and the solid residue was recrystallized from a little ligroin.

1-(4'-chlorophenoxy)-3,3-dimethyl-butan-2-one (73% of theory) was obtained.

6 ml (0.11 mol) [illegible]mine were added to 0.1 mol of 1-(4'-chlorophenoxy)-3,3-dimethyl-butan-2-one and th[illegible]ure was heated under reflux to 140°C for 1 hour. The resulting oily residue was taken up with petroleum ether, whereupon it crystallized; the solid residue was filtered off and well rinsed.

1-bromo-1-(4'-chlorophenoxy)-3,3-dimethyl-butan-2-one (89% of theory) was obtained.

0.033 mol of 1-bromo-1-(4'-chlorophenoxy)-3,3-dimethyl-butan-2-one and 9.9 grams (0.15 mol) of 1,2,4-triazole were dissolved in 80 ml of acetonitrile and heated under reflux for 48 hours. Thereafter the solvent was distilled off in vacuo, the residue was taken up with 150 ml of water and the aqueous solution was extracted by shaking three times with 40 ml of methylene chloride at a time. The organic phase was thereafter twice washed with 150 ml of water at a time, dried over sodium sulfate and distilled.

The oil obtained as residue was fractionally recrystallized from a little ether, whereby triadimefon, melting at about 82°C was obtained.

Toxicity

The acute oral LD_{50} value for rats is 560 to 570 mg/kg which is moderately toxic.

References

(1) Worthing, C.R., *Pesticide Manual,* 6th ed., p. 523, British Crop Protection Council (1979).
(2) Meiser, W., Buchel, K.H. and Kramer, W., U.S. Patent 3,912,752, October 14, 1975, assigned to Bayer AG.

TRIALLATE

Function: Herbicide (1)(2)(3)(4)

Chemical Name: S-(2,3,3-trichloro-2-propenyl)bis(1-methylethyl)carbamothioate

Formula:

$$[(CH_3)_2CH]_2NC(=O)SCH_2CCl{=}CCl_2$$

Trade Names: CP 23426 (Monsanto)
Avadex BW® (Monsanto)
Fargo® (Monsanto)

Manufacture (3)(4)

To a stirred solution of 202.4 grams (2.0 mols) of diisopropylamine in 1,000 ml of dry ethyl ether at −10° to 0°C there was bubbled in carbon oxysulfide until the gain in weight was 120 grams. This addition required 30 minutes and the mixture was then stirred at −10° to 0°C for an additional 90 minutes. Thereupon 145.4 grams (1.0 mol) of 1,1,2,3-tetrachloropropene was added in one portion and the reaction mixture stirred at 25° to 30°C for 24 hours. The by-product salt was removed by filtration and the excess ether removed in vacuo. The residue was distilled in vacuo and the fraction boiling at 148° to 149°C at 9 mm collected.

Toxicity

The acute oral LD_{50} value for rats is 1,471 mg/kg (B-5) which is slightly toxic.

Allowable Limits on Exposure and Use

Product Use: Issuance of a rebuttable presumption against regi[illegible]on for triallate was being considered by EPA as of September 1979 on the basis of p[illegible]e mutagenicity.

CEDAR CHEMICAL CORPORATION

24th Floor • 5100 Poplar Avenue • Memphis, TN 38137 • 901-685-5348

November 10, 1986

Mr. Sam Mabry
Director, Division
of Hazardous Waste
Mississippi Department of
Natural Resources
P. O. Box 10385
Jackson, Mississippi 39209

CONFIDENTIAL

Re: Vicksburg Plant/Regulatory Status of Surface Impoundment

Dear Mr. Mabry:

This letter is in response to the questions which you submitted to me by letter of October 22, 1986. This confirms that much of the information supplied below is confidential or in the nature of trade secrets. Accordingly, your office should take all necessary steps to protect the information from being disclosed to third parties or otherwise published without the express written consent of Cedar Chemical Corporation.

Question 1: Provide a list of all products and identifiable intermediates produced by the Vicksburg facility (both north and south plants) since November 19, 1980. Include with this list the time period(s) in which each product was produced and the quantities produced.

Answer: Inorganic Products:

a. Potassium Nitrate Facility - From November, 1980 through September, 1986, three products have been produced in this Facility: Potassium Nitrate (KNO_3) - 513,918 tons; Chlorine (CL_2) - 189,149 tons; and Nitrogen Tetroxide (N_2O_4) - 3,940 tons.

b. Nitric Acid Facility - From November, 1980 through September, 1986, this Facility produced 376,291 tons of Nitric Acid (HNO_3), substantially all of which has been utilized as an intermediate in the production of the products identified herein in the Potassium Nitrate and Dinitrobutylphenol Facilities.

In April, 1986, Nitric Acid production started up in a new Nitric Acid Facility which replaced the old Nitric Acid Facility.

Organic Products:

c. Toxaphene Facility - From November, 1980 through October, 1982, 7,479 tons of toxaphene and 10,744 tons of a by-product, Muriatic Acid (HCl) were produced.

d. Dinitrobutylphenol (DNBP) Facility - From November, 1980 through September, 1986, 17,723 tons of DNBP and 17,675 tons of an intermediate, sulfonated ortho secondary butyl phenol (OSBP) were produced.

e. Monosodium methanearsonate (MSMA) Facility - from January, 1983 to July, 1984, in a newly constructed facility on the Plant site, 399 tons of MSMA and 455 tons of an intermediate, disodium methanearsonate (DSMA) were produced.

Custom Manufactured Products for Third Parties:

f. Diethylhexylphosphoric Acid (DEHPA) - 732 tons of DEHPA and 776 tons of an intermediate, Diethylhexylphosphochloridate were produced between August and October, 1984 and May and June, 1985.

g. 1 Hydroxy-ethylidene - 1,1-diphosphonic acid (UNIHIB) - 19 tons of UNIHIB and 25 tons of a co-product, Acetic Acid produced in September, 1985

Question 2: Identify all waste streams associated with the above-mentioned products. Detail the constituents in each waste stream, the route and ultimate fate of each waste stream, the time of existence of each waste stream, and the quantities involved in each waste stream. This should include all leaks, spills and regular process waste streams.

Answer: With respect to the waste streams associated with the production of Potassium Nitrate and its co-products, Chlorine and Nitrogen Tetroxide; Nitric Acid; Toxaphene and Dinitrobutylphenol, please refer to Vertac Chemical Corporation's

NPDES Permit Applications dated June 26, 1981 and January 3, 1986 (Attachments A and B). In addition to the DNBP wash water discharged pursuant to the NPDES Permit, additional quantities of such wash water were shipped off-site for deep well disposal. Reference is also made to testimony and exhibits presented in support of Cedar Chemical Corporation's Motion to Dismiss Complaint heard by the Commission on September 16, 1986.

With respect to the other products identified in response to Question 1, the following additional information is supplied:

MSMA - 2,720 tons of salt cake generated, containerized and disposed of in RCRA permitted facilities off-site. The facility was operated on a no-discharge basis.

DEHPA - 344 tons of ethylhexyl chloride (EHC) and 4,183 tons of wastewater and 18 tons of off-quality product, either DEHPA or intermediate, were containerized and transported to RCRA permitted facilities off-site. The DEHPA operation was on a no-discharge basis.

UNIHIB - HCl scrubber water (H_2O, NaCl, NaOH, and Sodium Acetate) discharged in accordance with NDPES Permit. The approval letter from Matthew Chun, Industrial Waste Water Control Section, MDNR Bureau of Pollution Control, dated November 8, 1985 is enclosed herewith as Attachment C.

Question 3: Designate which of the above waste streams VCC considers to be hazardous waste, and provide determination date and reports required by 40 CFR 262.11.

Answer: Cedar Chemical Corporation or its predecessors have handled the following waste streams as "hazardous waste" under RCRA, in each case causing said waste to be transported to a RCRA permitted storage or treatment facility off the plant site:

(1) Toxaphene and DNBP drums, trash and refuge contaminated with toxaphene and DNBP; (2) MSMA salt cake; (3) DEHPA waste streams identified above; and (4) unneutralized DNBP washwater. In some cases, products which

may not be classified as hazardous under RCRA were transported as such to insure safe handling. Copies of annual and biennial hazardous waste manifest reports required under RCRA previously submitted by Cedar Chemical Corporation's predecessors are attached hereto as Attachments D - G. Records of individual manifests are voluminous, and are available for inspection at the Vicksburg Plant.

Question 4: Provide any and all piping and flow diagrams (in addition to those submitted to the Bureau of Pollution Control on September 16, 1986), concerning the handling of waste streams since November 19, 1980. Indicate any changes made to the piping or flow patterns of waste streams since November, 1980. This should include all pertinent piping (above and below ground), open areas, ditches and/or lagoons at both the north and south facilities.

Answer: The Company has provided the Bureau of Pollution Control with all such diagrams which exist with respect to the South Plant. Additional diagrams with respect to the North Plant are enclosed herewith. (Attachment H)

Question 5: Provide a descriptive listing of all hazardous waste either received by VCC or shipped off-site. Indicate quantities and types manifested and all data and reports generated to determine the nature of the waste as required by 40 CFR 262.11.

Answer: The Plant has not received incoming shipments of hazardous waste. See Response to Question 3 for outgoing shipments.

Question 6: Provide a copy of any spill reports made under the NPDES program or the CERCLA program.

Answer: The only such report which Cedar Chemical Corporation is aware of is that filed in connection with a breach of the surface impoundment dike which occurred in February, 1983, a copy of which report is attached hereto. (Attachment I)

Question 7: Has Vicksburg Chemical produced chlordane, methyl parathion or disulfoton since November 1980?

Answer: No.

Question 8: If so, has any of the waste water from the production of the above products been placed in the surface impoundments?

Answer: Not applicable.

Question 9: If the process waste water was not placed into the impoundment, how was it handled?

Answer: Not applicable.

Question 10: If the process wastewater was placed into the impoundment, was the wastewater treated prior to its entering the impoundment?

Answer: Not applicable.

Question 11. EPA's background document for the listing of untreated toxaphene wastewater (K098) and sludges from toxaphene wastewater treatment (K041) specifies, "wastewater is generated from the toxaphene production processes (leaks, spills, and washdowns), as well as from the scrubbing of vent gases in the HCL absorption and recovery step." Cedar Chemical should provide a detailed schematic of its toxaphene production process at the Vicksburg plant, describing how wastewater such as that described above was handled. If the Vicksburg plant did not generate such a wastewater, an explanation of how such wastewater generation was avoided should be provided. (A copy of the background document is enclosed.)

Answer: A schematic of the toxaphene production process utilized by Cedar Chemical Corporation's predecessors, Vicksburg Chemical Company and Vertac Chemical Corporation, is attached. (Attachment J) As previously pointed out, no toxaphene contaminated process wastewater or sludges of the type contemplated by EPA's Background Document were generated at the Vicksburg Plant.

Cedar believes that the sludge from toxaphene wastewater treatment referred to in the Background Document and classified as K041 under RCRA resulted from the filtration of toxaphene solution through diatomaceous earth in accordance with the pro-

cess utilized by Hercules, Inc. at its Brunswick, Georgia Plant, producing, according to the Background Document, approximately 7 tons per day of sludge containing approximately 1% toxaphene by weight. (See Schematic attached as Exhibit K) No such sludge was produced in the process utilized at the Vicksburg Plant, nor did the Vicksburg toxaphene process involve the discharge of any untreated process wastewater, as that term was intended in connection with the K098 RCRA classification. In fact the only "waste streams" associated with toxaphene production at the Vicksburg Plant would have consisted of any de minimis losses occasioned by minor leaks and spills, and scrubber water generated from operation of the Plant's air emission control procedures in connection with its HCL recovery system (muriatic acid or HCL being a by-product of the toxaphene production process). The scrubber water consisted of a weak aqueous solution containing sodium chloride and sodium hydroxide.

It is believed that the Vicksburg Plant was able to avoid the generation of process wastewater (K098) and sludge (K041) of the type generated by Hercules, Inc. at its Brunswick, Georgia Plant by utilizing high purity camphene, which it purchased as a raw material (toxaphene being produced by the chlorination of camphene). Hercules produced its own camphene from pine stumps, which, it is believed, produced a relatively low purity product requiring substantial filtration which the Vicksburg Plant process did not require.

Question 12: In an August 16, 1984, letter to the Mississippi Bureau of Pollution Control (MBPC), states, "In reviewing our past toxaphene discharge data I find that Vertac's last permit excursion occurred on February 16, 1982 (11.5 ppb)." Cedar Chemical should provide an explanation of the source of this toxaphene in the wastewater. (A copy of the letter is enclosed.)

Answer: Two possible explanations - (1) inaccurate analysis (toxaphene easily confused with other compounds at low ppb levels) and (2) possible heavy storm water runoff episode transporting surface soils adjacent to the facility, portions of which could have been contaminated with trace amounts of toxaphene as a result of previous de minimis losses, as has been shown in the case of dinoseb. It should be noted that the 11.5 ppb "excursion" referred to translates to less than one ounce of

toxaphene based on an average daily flow of 500,000 gallons per day under the NPDES Permit.

Question 13: On February 17, 1983, the MBPC sampled both the sludge from the east side of the impoundment and the stream bank on the east side of the impoundment where the impoundment dike had failed. Analysis of these samples indicated the sediments contained 280 ppm and 360 ppm of toxaphene respectively. Cedar Chemical should provide an explanation of the source of the toxaphene found in impoundment sediment samples. (Copies of the analytical results are enclosed).

Answer: See response to Question 12. In addition, in view of the molasses-like consistency of toxaphene and its tendency to bind together and to adhere to soils or sediments, it would not be surprising if some contamination may have been dislodged in the heavy storm water incident which occurred in February, 1983, particularly in view of the long history of toxaphene production in facilities adjacent to the surface impoundment (since early 1970's). It should also be pointed out that the soil sample measuring 280 ppm was subjected to further analysis using the EP toxicity method, which demonstrated less than 20 ppb toxaphene, a level far below the regulatory level established under RCRA. It should also be pointed out that the Company caused the 18 samples obtained from the pond in September, 1986 to be analyzed for toxaphene contamination and none was detected within the lab's limit of detection of .1 ppm. The analytical results referred to above have been supplied to the Department by our counsel.

Sincerely yours,

CEDAR CHEMICAL CORPORATION

By: _____
Fred Ahlers, Plant Manager

FA:jw
Enclosures
cc: Colonel Charles Blalock
Mr. William L. Smith
Mr. Allen T. Malone

CONTINGENCY PLAN
CEDAR CHEMICAL CORPORATION
VICKSBURG CHEMICAL DIVISION
VICKSBURG, MISSISSIPPI

Prepared for:

CEDAR CHEMICAL CORPORATION
VICKSBURG CHEMICAL DIVISION
VICKSBURG, MISSISSIPPI

RECEIVED
OCT 26 1989
DEPT. OF NATURAL RESOURCE
BUREAU OF POLLUTION CONTROL

Prepared by:

IT CORPORATION
1150 LEBLANC ROAD
PORT ALLEN, LOUISIANA

JUNE 1989

TABLE OF CONTENTS

	PAGE
LIST OF TABLES	ii
LIST OF FIGURES	iii
LIST OF APPENDICES	iv
1.0 INTRODUCTION	1
1.1 PURPOSE AND OBJECTIVES	1
1.2 REGULATORY POLICY (FEDERAL WATER ACT - SECTION 311)	2
2.0 EMERGENCY RESPONSE ORGANIZATION	3
3.0 COMMUNICATION	4
4.0 FIRE, EXPLOSIVES, GAS RELEASES	5
5.0 SPILLS	7
6.0 CHEMICAL TANKS	11
6.1 CHEMICAL TANK DESCRIPTIONS	11
6.1.1 Nitric Acid	11
6.1.2 Sodium Hydroxide	12
6.1.3 Anhydrous Ammonia	13
6.1.4 Sulphuric Acid	15
7.0 EVACUATION	16

LIST OF TABLES

TABLE NO.	TITLE
1	Emergency Coordinator List
2	Emergency Use Index
3	Emergency Alarm
4	Emergency Equipment List

LIST OF FIGURES

FIGURE NO.	TITLE
1	Locations of Emergency Equipment
2	Schematic on Organization of the Emergency Response Team

CED/CONT-TOC

LIST OF APPENDICES

APPENDIX	TITLE
A	List of Agencies to Receive the Contingency Plan
B	Chemicals Contingencies with Spill Control and Hazard Data

CED/CONT-TOC

CONTINGENCY PLAN
VICKSBURG CHEMICAL DIVISION
VICKSBURG, MISSISSIPPI

1.0 INTRODUCTION

1.1 PURPOSE AND OBJECTIVES

This contingency plan for Cedar Chemical Corporation, Vicksburg Chemical Division (VCD) facility was developed specifically to cope with emergency incidents that could possibly occur at the facility. It will enable VCD personnel to respond quickly and effectively to any emergency situation, such as fire, explosion, gas release, spill, or natural disaster. This plan will be maintained at the VCD facility and will be made available to all employees. The required call lists will be kept current and will be posted and distributed to key plan participants. This up-dated plan will be submitted to the police department, fire departments, and hospitals listed in Appendix A.

This contingency plan addresses the requirements as set forth in 40 CFR, Part 264, Subpart D, Section 264.50 through 264.56, and Federal Clean Water Act - Section 311.

This plan provides for a pattern of coordinated and integrated response by plant personnel to respond to any emergency, and a system of prompt notification of local and state governments concerning any in-plant emergency.

The contingency plan will be reviewed and appropriately amended annually or if:

a. The plan fails in an emergency,
b. There is a significant change in facility design or operation,
c. There is a change in emergency coordinator, or
d. There is a significant change in emergency equipment.

The plan has been prepared for the entire VCD facility. VCD operates several chemical storage tanks, as shown in Figure 1. Each operating unit within the

facility will have written and posted emergency instructions for operations in that area consistent with this plan. An outline of each chemical's contingencies with spill control and hazard data are given in Appendix B.

The objectives of this plan are to provide for efficient, coordinated, and effective action to minimize damage and injuries from fire, explosion, spills or inadvertent discharges of chemicals, including containment and removal.

This plan provides for:

1. Assignment of duties and responsibilities;
2. Establishment and identification of emergency task forces;
3. Instructions covering emergency coordination, including a system of notification surveillance and reporting;
4. The establishment of a Plant Emergency Coordinator to direct operations in executing this plan;
5. A list of resources to combat fires and spills; and
6. Directions of public information releases.

1.2 REGULATORY POLICY (FEDERAL CLEAN WATER ACT - SECTION 311)

a. Congress has declared that it is the policy of the United States that there should be no discharge of oil or hazardous substance into or upon the navigable waters of the United States, adjoining shorelines, or into or upon the waters of the contiguous zone, or which may affect natural resources belonging to, appertaining to, or under the exclusive management authority of the U. S. (including resources under the Fishery Conservation and Management Act of 1976).

b. Any person in-charge of a vessel or an onshore or offshore facility of any kind shall, as soon as he has knowledge of any discharge of oil or hazardous substance from such vessel or facility, immediately notify the National Response Center at 1-800-424-8802.

c. Plant Policies - The primary thrust of this plan is to provide a coordinated plant response capability in the event of an unplanned or sudden, accident or unusual event, i.e., fire, explosion, spill or discharge of oil or hazardous waste that poses a threat, or the potential of a threat to personal health, safety and welfare. Environmental pollution control techniques shall be employed in accordance with applicable regulations and guidelines.

2.0 EMERGENCY RESPONSE ORGANIZATION

The Emergency Coordinator (EC) will be responsible for all response measures that may need to be taken during an emergency. To assure that the EC function is one of a quickly recognized authority, it will be performed by a highly qualified individual.

Table 1 is the approved emergency coordinator list in order of precedence. During weekends and nights, shift supervisors will act as the emergency coordinator in lieu of or until the EC (Table 1) can take charge either on-site or by phone.

VCD has developed an in house Emergency Response Team (ERT) headed by the EC for coordinating efforts to handle an emergency in the event of fire, spill or gas release. The in-house resources to combat fires and spills by the ERT include fire fighting, spill control and personnel protective equipment. A list of emergency equipment is provided in Table 4. Figure 1 shows the location of this equipment. Figure 2 shows a schematic on the organization of the ERT.

Arrangements have been made with the local sheriff, and fire departments, hospitals, and ambulance services for quick response when their help is needed during an emergency. The required notifications of an emergency incident to the local, state, and federal agencies will be the responsibility of the EC. Coordination arrangements with appropriate agencies will be made by providing them with VCD facility contingency plan. The signed receipts for the approved plan from these agencies will be kept on file.

3.0 COMMUNICATION

A responsibility of the emergency coordinator will be to maintain direct inside and outside communication. An emergency use index is provided in Table 2. The location of alarm/horn is shown in Figure 1. The inside communication tools are telephone, portable radio and emergency alarms. Table 3 lists the alarm code interpretation. The outside communications are described below.

The local fire department will be notified in the event of a major fire or explosion or major spill of flammable material. The fire department can be reached by 911 or 601-636-1121.

The Vicksburg Police Department at 601-636-2511 and the Sheriff's office at 601-636-1761 will be notified to alert the public to avoid potential contact with any chemicals in the event of major fire or explosion or a major spill causing reasonable probability of transit of chemicals in sufficient quantities beyond the boundary lines.

The local hospitals will be contacted in the event of a major incident that has caused bodily harm or a major incident with sufficient chemical exposure to require blood testing, physical exams, etc. The telephone number and address of these hospitals are:

- Mercy Regional Medical Center 601-631-2250
  100 McAuley Drive
- Vicksburg Medical Center 601-636-2611
  3311 I-20 Frontage Road

The Chemical Transport Emergency Center (Chemtrec) is a 24-hour a day service with access to industry-wide expertise on hazardous material handling of any chemical commercially available. The Chemtrec can be reached at (800) 424-9300.

The Bureau of Pollution Control is responsible for coordinating, monitoring and cleanup of any large-scale release of chemicals which threatens the environment. The Bureau of Pollution Control is also the primary agency dealing with chemical hazards involved in pipeline breaks, train wrecks, truck wrecks, industrial accidents, etc., when human health is involved. The Bureau of Pollution Control in Jackson, can be reached at 601-961-5099.

4.0 FIRE, EXPLOSIVES, GAS RELEASES

For emergency response activities, response management at VCD facility is accomplished through a single predesignated agent; the 'EC' (Emergency Coordinator). The specific duties of the EC (or his substitute, Table 1), are as follows:

A. He will immediately:

1. Activate internal facility alarms or communications to notify all facility personnel: and

2. Notify appropriate state or local agencies with designated response rolls if their help is needed. The order of notification is to notify local authorities and emergency teams and lastly, state and federal authorities.

B. Whenever there is a release, fire, or explosion, the EC will visually inspect the area to immediately identify the character, exact source, amount and areal extent of any released materials. The EC if required, will also consult material safety data sheets or submit samples for analysis by the laboratory. The laboratory will analyze for the particular product or raw material suspected to be spilled.

C. Concurrently, the EC will assess possible hazards to human health or the environment that may result from the release, fire, or explosion. This assessment will consider both direct and indirect effects of the release, fire or explosion (e.g., the effects of any toxic, irritating, or asphyxiating gases that are generated, or the effects of any hazardous surface water run-offs from water or chemical agents used to control fire and heat-induced explosions). A description of such hazards for different chemicals handled at VCD are provided in Appendix B.

D. If the EC determines that the facility has had a release, fire or explosion which could threaten human health or the environment, outside the facility, he will report his findings as follows:

1. If his assessment indicates that evacuation of local areas may be advisable, he will immediately notify appropriate local authorities. The EC will assist appropriate officials to decide whether local areas should be evacuated. An evacuation procedure is discussed in Section 7.0.

2. He will immediately notify the National Response Center (NRC) (using their 24-hour number 800/424-8802). The report will include:

   i. name and telephone number of reporter;
   ii. name and address of facility;
   iii. time and type of incident (e.g., release, fire);
   iv. name and quantity of material(s) involved, to the extent known;
   v. the extent of injuries, if any; and
   vi. the possible hazards to human health, or the environment outside the facility.

E. During an emergency, the EC will take all reasonable measures necessary to ensure that fires, explosions, and releases do not occur, recur or spread to other areas at the facility. These measures will include, where applicable, stopping processes and operations, collecting and containing released waste, and removing or isolating containers.

F. If the facility stops operations in response to a fire, explosion, or release, the EC will monitor for leaks, pressure build-up, gas generation, or ruptures in valves, pipes, or other equipment wherever this is appropriate.

G. Immediately after an emergency, the EC will provide for treating, storing or disposing of recovered material, contaminated soil or surface water, or any other material that results from a release, fire, or explosion at the facility. A brief description of spill control and disposal methods for various chemicals, handled at VCD are provided in Appendix B.

H. The EC will ensure that, in the affected area(s) of the facility:

1. Materials incompatible with the released material are not allowed to mix or react with the released material and the released material is collected, treated, stored or disposed.

2. All emergency equipment listed in the contingency plan is cleaned and fit for its intended use before operations are resumed. The inspection schedules are listed in Table 4. Figure 1 provides the locations of emergency equipments.

I. The EC will ensure that the owner or operator notifies the Regional Administrator and appropriate state and local authorities, that the facility is in compliance with paragraph (H) of this Section before operations are resumed in the affected area(s) of the facility.

J. The EC will ensure that the owner or operator notes in the operating record the time, date, and details of any incident that requires implementing the contingency plan. Within 15 days after the incident, the owner or operator must submit a written report on the incident to the Regional Administrator. The report will include:

1. Name, address, and telephone number of the owner or operator;

2. Name, address, and telephone number of the facility;

3. Date, time, and type of incident (e.g., fire, explosion);

4. Name and quantity of material(s) involved;

5. The extent of injuries, if any;

6. An assessment of actual or potential hazards to human health or the environment, where this applicable; and

7. Estimated quantity and disposition of recovered material that resulted from the incident.

5.0 SPILLS

In the event of a major emergency involving a chemical spill, the following general procedures will be used for rapid and safe response and control of the situation. If an employee discovers a chemical spill or process upset resulting in a vapor release, the employee will immediately report it to the area supervisor, and follow the specific emergency procedures for that storage area and concerned chemical. These specific emergency procedures for various chemicals are provided in Appendix B.

The area supervisor will contact the designated EC at the time of the incident. When contacted, the designated Emergency Coordinator will obtain information pertaining to the following:

1. The material spilled or released,

2. Location of the release or spillage of hazardous material,

3. An estimate of quantity released and the rate at which it is being released,

4. The direction in which the spill or vapor or smoke release is heading,

5. Any injuries involved,

6. Cause of spill, release or fire, and

7. The area and materials involved and the intensity of the fire or explosion.

In the event of a leak or spill in a tank, all feed lines to tanks or pipelines will be closed.

If a chemical spill is not contained within a dike or sump area, an area of isolation will be established around the spill. The size of the area will generally depend on the size of the spill and the materials involved. If the spill is large and involves a tank or a pipeline rupture, an initial isolation of at least 100 feet in all directions to allow cleanup and repair and to prevent exposure. When any spill occurs, only those persons involved in overseeing or performing emergency operations will be allowed within the designated hazard area. If possible the area will be barricaded or otherwise blocked off.

The area will be further evacuated if the spill results in the formation of a toxic vapor cloud. An area at least 500 feet wide and 1,000 feet long will be evacuated downwind if volatile toxic materials are spilled.

If the control and cleanup of a spill, release, or fire is within the capabilities of company personnel and local response teams, the Mississippi Department of Natural Resources or the NRC will not be notified. The Mississippi Department of Natural Resources or the NRC will be notified if one of the following occurs:

1. The spill area is beyond the plant boundaries and the quantity of hazardous material spilled is equal to or greater than the reportable quantity specified under 40 CFR Part 117.

2. The spill involves other hazardous materials not listed but used at the plant if they pose an actual or potential hazard to life or property. As called for in regulations developed under the Comprehensive Environmental Liability and Compensation Act of 1980, the practice is to report a spill of a pound or more of any hazardous material for which a reportable quantity has not been established and which is listed under the Solid Waste Disposal Act, Clean Air Act, Clean Water Act, or TSCA. VCD should follow the same practice for any substances not listed in the regulations noted above.

The following guidelines will be used in case of an accidental episode involving waste materials. These are general guidelines, and circumstances may dictate some alterations to these procedures.

Most waste spills and leaks are easily contained within dikes and sumps or areas of isolation. The spills will be cleaned by absorbent materials and pads. The spills may also be collected into 55-gallon drums and stored temporarily in a designated storage area, until arrangements for disposal are made. Appendix B outlines response to spills of various chemicals.

For all large spills or serious leaks the following guidelines will be followed as closely as possible:

1. If a leak develops in the surface impoundment the Emergency Coordinator will:

   a. Shut off flow into the section of the impoundment that is leaking. (The impoundment is divided into three sections interconnected by drainage pipe.)

   b. Begin repairs.

2. If a leak develops or a spill occurs from a waste storage tank, pipeline, pump, etc., the person discovering the discharge will leave the immediate area and contact the EC. The EC will obtain the following information:

   a. Person(s) injured and seriousness of injury, if any.

   b. Location of the spill or leak, material involved, and source (tank, pipeline, etc.).

   c. The approximate amount spilled, an estimate of the liquid and/or gas discharge rate, and the direction that the liquid flow or gaseous cloud is moving.

d. Whether a fire is involved.

3. If necessary, the EC will:

   a. Initiate evacuation of the hazard area. For small spills or leaks, isolate at least 50 feet in all directions. For large spills, initially isolate at least 100 feet in all directions and keep all persons upwind of spill.

   b. Decide which entrance/egress will be suitable for emergency vehicles and evacuation if necessary.

   c. Obtain medical attention for any injured persons. It may be helpful to instruct the caller about initial first aid procedures. Then notify the hospital for estimated types of injuries and possible contaminants risk and exposures, and arrange transportation of injured to the hospital.

   d. Call the fire department if a fire is involved that cannot be extinguished by plant personnel. The EC will instruct the fire department to fight small fires with dry chemicals, CO_2, or foam, and large fires with water spray, fog, or foam. Keep heat-exposed containers cooled with water spray and remove them from the fire area if possible. IF A RISING SOUND COMES FROM A VENTING DEVICE OR THE TANK BEGINS TO DISCOLOR, ALL PERSONNEL SHALL WITHDRAW FROM THE AREA IMMEDIATELY AS AN EXPLOSION MAY BE IMMINENT.

   e. Dispatch emergency personnel to the site to take the appropriate action.

   f. Contact the proper authorities.

4. Cleanup personnel will:

   a. Make sure all unnecessary persons are removed from the hazard area. Follow the guidelines outlined in Appendix B for various chemicals.

   b. Put on protective clothing and equipment.

   c. If flammable material is involved, remove all ignition sources, and use spark and explosion proof equipment and clothing in containment and cleanup.

   d. If possible try to stop a leak. Special materials will be kept on hand for temporary repairs. HOWEVER, DO NOT RISK LIFE TO SAVE PROPERTY.

   e. Remove all surrounding materials that could be especially reactive with materials in the waste. Determine the major components in the materials at the time of the spill.

   f. Contain, divert, and clean up a spill if it has not been contained by a dike or sump. Most spills contained within the dike or sump can be pumped back into the appropriate storage tank or drum.

g. Place all containment and cleanup materials in drums for proper disposal. Some items, such as absorbent rags may have to be cut up before disposal.

h. Place all recovered liquid material and contaminated soil in drums for removal to an approved disposal site.

Procedures to be used, in order to prevent the recurrence or spread of fires, explosions or releases include:

- stopping processes and operations,
- collecting and containing released material, and
- recovering or isolating containers.

Immediately after an emergency, the EC will make arrangements for treatment, storage, or disposal of recovered material, contaminated soil, surface water or any other contaminated material accumulated during the cleanup described above.

6.0 CHEMICAL TANKS

This section details the tank loading operations and specific emergency actions for various chemical tanks at the VCD facility.

6.1 CHEMICAL TANK DESCRIPTIONS

The chemicals that are important in terms of handling frequency, hazardous nature and future use are:

- Nitric Acid (Section 6.1.1),
- Sodium Hydroxide (Section 6.1.2),
- Anhydrous Ammonia (Section 6.1.3), and
- Sulphuric Acid (Section 6.1.4).

6.1.1 Nitric Acid

Nitric acid is stored in nine (9) tanks. These tanks No. 1 through 9 are located at the nitric acid building as shown in Figure 1. Nitric acid is manufactured at the VCD and is used in the potassium nitrate processes.

6.1.1.1 Chemical Description

Nitric acid, a colorless liquid with a characteristic choking odor which fumes in moist air, is a hazardous substance (EPA). Nitric acid is corrosive and soluble in ether and alcohol (flammable). National Institute of Occupational Safety and Health (NIOSH) and ACGIH recommend a TWA of 2 ppm. The Short-Term Exposure Limit (STEL) is 4 ppm and the IDLH level is 100 ppm.

Exposure to nitric acid represents a dual health hazard; specifically, corrosion of the skin and other tissues from topical contact and acute pulmonary edema or chronic obstructive pulmonary disease from inhalation.

6.1.1.2 Tank Loading Operation

The tractor/trailer position is checked to see if the wheels are chocked. Check for trailer pressure and then open lid and look inside the trailer. Fill pipe is lowered, valves opened, and pump started. Sample is taken to verify percent of nitric acid. The level in the tank is monitored to prevent any overflow. After loading is completed, the pump is shut off, valves are blocked at loadout, and fill pipe is raised. The lid is closed and fastened. Any trace of acid around the lid is washed off. Any spills during this operation is handled as outlined in Appendix B. The gangway is raised and the chock is removed after the supervisor is notified.

6.1.2 Sodium Hydroxide

Sodium hydroxide is stored as 15 and 50 percent aqueous solution in tanks No. 31 and 32, respectively. The tanks are located, next to the sulfuric acid tanks as shown in Figure 1. Sodium Hydroxide, at VCD is used for pH control.

6.1.2.1 Chemical Description

Sodium hydroxide is a white tissue deliquescent material sold as pellets, flakes, lumps, or sticks. It is a hazardous substance (EPA) and very corrosive to animal and vegetable. Sodium hydroxide is dissolved in water to generate 15 and 50 percent solution at the VCD facility. NIOSH and ACGIH (1983/1984) recommend a ceiling concentration of 2.0 mg sodium hydroxide/m^3 as determined by a sampling period of 15 minutes. The IDLH level is 200 mg/m^3.

This compound is extremely alkaline in nature as is very corrosive to body tissues. Dermatitis may result from repeated exposure to dilute solutions in the form of liquids, dusts, or mists. Local contact of sodium hydroxide with eyes, skin, and the alimentary tract has resulted in extensive damage to tissues, with resultant blindness, cutaneous burns, and perforations of the alimentary tract. Systemic effects are due entirely to local tissue injury. Extreme pulmonary irritation may result from inhalation of dust or mist.

6.1.2.2 Tank Loading Operation

The truck carrying sodium hydroxide is parked at the unloading dock with emergency brakes depressed. A sample is taken of the content and sent to the laboratory for testing. If the test satisfies the quality requirements, the unloading is initiated. A 2 inch hose is connected to the truck and the unloading line. An air line from the plant is then connected to the tank truck and pressured to 35 psi. Before unloading is started the connections are checked for leaks by opening the safety valve first and manual valve gradually. If the leaks are detected, they are tightened before opening the manual valve. The levels in the truck and tank are manually monitored during loading throughout the loading/unloading process to prevent overflow. When the loading/unloading is completed, the air supply is shut off and the tanker truck is allowed to depressure into the storage tank. After the tank is depressured, the truck valves are closed first and then the unloading valve. The hose is disconnected from the truck and emptied into the tank or collected for disposal. The hose is disconnected from the unloading line after any liquid trapped or retained in the hose is emptied/collected. The hose is put in the truck rack. Any spillage that may take place during this operation is cleaned as per the procedures outlined in Appendix B.

6.1.3 Anhydrous Ammonia

Anhydrous liquid ammonia is stored in 3 tanks, Nos. 11, 12, and 13; and two 6,000 tons capacity storage tanks (sphere). The locations of tanks and spheres are shown in Figure 1. The Anhydrous Ammonia is stored in a pressurized system for maintaining the liquid state, at the VCD facility. It is used as a raw material for the manufacturing of Nitric Acid.

6.1.3.1 Chemical Description

Anhydrous Ammonia, a colorless, strongly alkaline, and extremely soluble gas with a characteristic pungent odor; is a hazardous substance (EPA). It liquifies readily under pressure. When mixed with very little water or water vapor, both gaseous and liquid ammonia will vigorously attack copper, silver, zinc, and other alloys. Anhydrous Ammonia is stored in liquid state at the VCD facility. The ACGIH (1983/84) has set TWA value as 25 ppm. The STEL value is 35 ppm and the IDLH level is 500 ppm. The flammable limit of ammonia in air is in the range of 16 to 25 percent.

Contact with anhydrous liquid ammonia or with aqueous solutions is intensely irritating to the mucous membranes, eyes, and skin. Ammonia gas is also irritating to the eyes and to moist skin. Mild to moderate exposure to the gas can produce headache, salvation, burning of throat, ansomia, perspiration, nausea, vomiting, and substantial pain.

6.1.3.2 Tank Loading Operation

The truck is parked at the loading area designated as "A" in Figure 1 with emergency brake depressed. Vapor and liquid hoses are connected, and the safety valve is opened. Levels in the tanks are recorded to assure that it will hold the truck content. The vapor valves on the distribution tank line are opened. A pressure of 15 to 20 pounds is applied on the tank truck, and the valve on the liquid ammonia line to the spheres is opened. Next, the liquid valve from the truck is opened gradually to check for leaks. It should take approximately 45 to 55 minutes to unload the tank truck. During the unloading process the level in the sphere and tightening of connections are monitored to avoid any overspill or leaks. When the tank is empty, the vapor valve from the distribution tank is closed first and then the safety vapor valve and vapor block value on the tank truck. The pressure on the vapor line is bled off into the water drum at the distribution tank. The vapor line from the trailer is disconnected and the head valve at the distribution tank is blocked. The 3 inchs manual block valve to the spheres is blocked. Next the pressure in the liquid hose is released. The liquid line from the tank truck is unhooded and the bleed valve on the liquid line is closed. Finally, the lines on the truck are capped and weighed out. Any spill or release during this operation is handled as per the procedures outlined in Appendix B.

6.1.4 Sulphuric Acid

Sulphuric acid is stored in three tanks, two of which are empty at this moment. The location of these tanks are shown in Figure 1. Sulphuric acid at VCD is used for pH control.

6.1.4.1 Chemical Description

Sulfuric acid is a strongly corrosive, dense oily liquid. It is colorless to dark brown and a hazardous substance (EPA). Miscible with water in all portions and evolves much heat when mixed with water. Sulfuric acid is not flammable but highly reactive and capable of igniting finely divided combustible materials on contact. The federal standard and the ACGIH TWA (1983/84) value for sulfuric acid is 1 mg/m^3. There is no tentative STEL value set, and the IDLH level is 80 mg/m^3.

Sulfuric acid is rapidly injurious to mucous membranes and exceedingly dangerous to the eyes. Ingestion causes serious burns of the mouth or perforation of the esophagus or stomach.

6.1.4.2 Tank Operation

The truck is parked in place near the tank with emergency brakes engaged. A sample is taken from the truck and quality tested before unloading. The level in the tank is checked to ensure it can hold the contents of the truck. A 2 inch diameter line to the tank and a 3/4 inch diameter air hose is connected. The air used is instrument air to avoid any moisture in either the truck tank or the plant storage. The truck tank is pressurized not to exceed 30 psi. At this time the safety valve is opened first; then the manual block valve is slowly opened to check the liquid transfer hose for leaks. If no leaks have developed or leaks are stopped, the manual valve is fully opened. The truck tank pressure is maintained at 30 psi until the liquid line blows clear, with continuous monitoring of the level of acid in the tank to avoid overflow. The air line is shut off and the truck tank is depressurized into the plant storage tank. After the tank truck pressure is below 5 psi, the air line is disconnected and pressure from the tank truck is vented. After the pressure is released off the liquid line from the truck, it is disconnected. Extreme caution should be exercised in disconnecting this hose. After the hose has been disconnected, acid remains are collected to ensure no liquid has

been trapped in the line. When the hose is completely emptied, it is disconnected from the truck and placed in the truck rack. Any spill during this operation shall be cleaned as per the procedure outlined in Appendix B.

7.0 EVACUATION

VCD does not foresee any hazardous material incident that would cause need for an evacuation plan at the Vicksburg facility. However, if the EC assessment indicates that evacuation of local areas may be advisable, he will immediately notify the appropriate local authorities. The EC will help the appropriate officials decide whether local areas should be evacuated and notify the National Response Center. In the event that VCD facility requires evacuation, the following evacuation procedures and routes will be followed:

1. Notify authorities

a. Vicksburg Police Department	636-2511
b. Warren County Sheriff's Department	636-1761
c. Warren County Civil Defense	636-1544
d. Fire Department	911
e. Mississippi Emergency Management Agency	601-961-5340
f. National Response Center	1-800-424-8802
g. Corporate Offices (Memphis)	1-901-685-5348

2. Activate the plant emergency alarm system. The signals to be given are as follows:

   a. Fire - three short (three seconds) blasts.
   b. Toxic chemical - continuous, if uncontrollable.
   c. Weather - in the event of a weather emergency (tornado), evacuation will probably not be possible due to the short warning time. Take cover immediately and prepare to evacuate after the storm if damage requiring evacuation has occurred.

3. Each plant operating area will have a designated marshalling area at which all personnel in the area will quickly assemble. The supervisory employee in each area will perform a head count to determine if all personnel in the area are accounted for before evacuation of the area. The supervisory employee will report to the EC who has responsibility for plant-wide personnel accountability and evacuation.

4. Evacuate non-essential personnel. The route for evacuation is contingent on conditions at the time of the emergency. The EC will check wind speed and direction and have general knowledge of the weather forecast to anticipate changes in conditions. Evacuation

from the North Plant will proceed through the gate to either the Interstate Welcome Station via Rifle Range Road and Warrenton or to the intersection of Miller Road and U.S. Highway 61 via Rifle Range Road and Miller Road. If egress from the North Plant gate is blocked, proceed to the South Plant.

Evacuation of the South Plant can proceed through the North Plant if conditions allow it. If evacuation cannot proceed through the North Plant, use the "Hill" road to Rifle Range Road. If conditions do not allow either of the foregoing routes, proceed south on the Illinois Central railroad tracks to Warrenton Road.

After evacuation, a census of personnel present shall be conducted. The emergency response team shall be notified of those personnel which may be unaccounted for.

5. Remaining personnel and the emergency response team will use emergency shutdown procedures to accomplish a safe and orderly a shutdown of operations.

6. Remaining personnel and the Emergency Response Team shall check that non-essential personnel have been evacuated.

TABLES

TABLE 1

VCD EMERGENCY COORDINATOR LIST
VICKSBURG CHEMICAL DIVISION
VICKSBURG, MISSISSIPPI

NAME	PLANT POSITION	PLANT PHONE	HOME PHONE	HOME ADDRESS
Roger Holdiness	Safety Director	(601) 636-1231 ext. 211	636-7806	Hwy. 61 South
S. Keen	Production Superintendent	(601) 636-1231 ext. 203	636-0777	Redwood
B. J. Gunn	Production Superintendent	(601) 636-1231 ext. 333	636-5604	201 Willowrun
G. D. Madsen	Technical Manager	(601) 636-1231 ext. 262	638-2847	905 Choctaw
Dennis Walker	Controller	(601) 636-1231 ext. 240	636-7596	1316 Baum

TABLE 2

VCD EMERGENCY USE INDEX
VICKSBURG CHEMICAL DIVISION
VICKSBURG, MISSISSIPPI

EMERGENCY REPORTING AND COORDINATION

National Response Center (NRC)	(800)-424-8802
Fire Department	911 or (601)-636-1121
Ambulance	911
Sheriff	911 or (601)-636-1761
Vicksburg Police Department	(601)-636-2511
Office of Emergency Services (OES)	(601)-961-5340*
Mayor	(601)-636-3411
Bureau of Pollution Control	(601)-961-5099
Mississippi State Department of Health, Vicksburg	(601)-636-4356
Cedar Corporate Offices	(901)-685-5348

EMERGENCY POLLUTANT HAZARDS INFORMATION

Chemical Transport Emergency Center (Chemtrec)	(800)-424-9300
Assistance Data Systems (OHMTADS)	(214)-767-2666

CED/CONT-PLAN

TABLE 3

VCD EMERGENCY ALARM
VICKSBURG CHEMICAL DIVISION
VICKSBURG, MISSISSIPPI

SIGNAL	INSTRUCTION
One long blast	Operational emergency
Two short blasts three times	Fire
Three short blasts two times	All clear

TABLE 4

EMERGENCY EQUIPMENT LISTS
VICKSBURG CHEMICAL DIVISION
VICKSBURG, MISSISSIPPI

EQUIPMENT	FREQUENCY OF INSPECTION	QUANTITY
Two major dirt moving contractors (Buford Construction and Miller Construction) are available in Vicksburg on short notice with bulldozers, backhoes, scrapers, trucks, portable sump pumps, portable sludge pumps, cranes, sandbags, rip-rap, generators and emergency lighting systems. Both contractors are extremely familiar with the plant and plant personnel. (Telephone number 636-4813)	As needed	varies
Dirt borrow areas are available on site.	As needed	(-)
55-gallon used steel drums	As needed	varies
55-gallon steel drums with liners	As needed	varies
Emergency showers and eyewash	Monthly	11
Face shields, goggles, and eye-glasses with side shields	Monthly	varies
Chemical cartridge escape respirators with cartridges for organic vapors and acid gases	Monthly	varies
Chest-mounted gas mask canisters; full face	Monthly	4
Self contained breathing apparatus	Monthly	4
Fire extinguishers	Monthly	19
Fire Hoses	Monthly	13
Emergency horn	Tested weekly	1
Fire blankets	Monthly	varies
Telephone system	As needed	18
Portable radio	As needed	(-)
First Aid equipment and supplies	Monthly	4
Protective Clothing (uniforms, rubber boots, gloves)	As needed	varies
Barrier tapes	As needed	varies
Shower room	Monthly	2

FIGURES

FIGURE 2

EMERGENCY RESPONSE TEAM

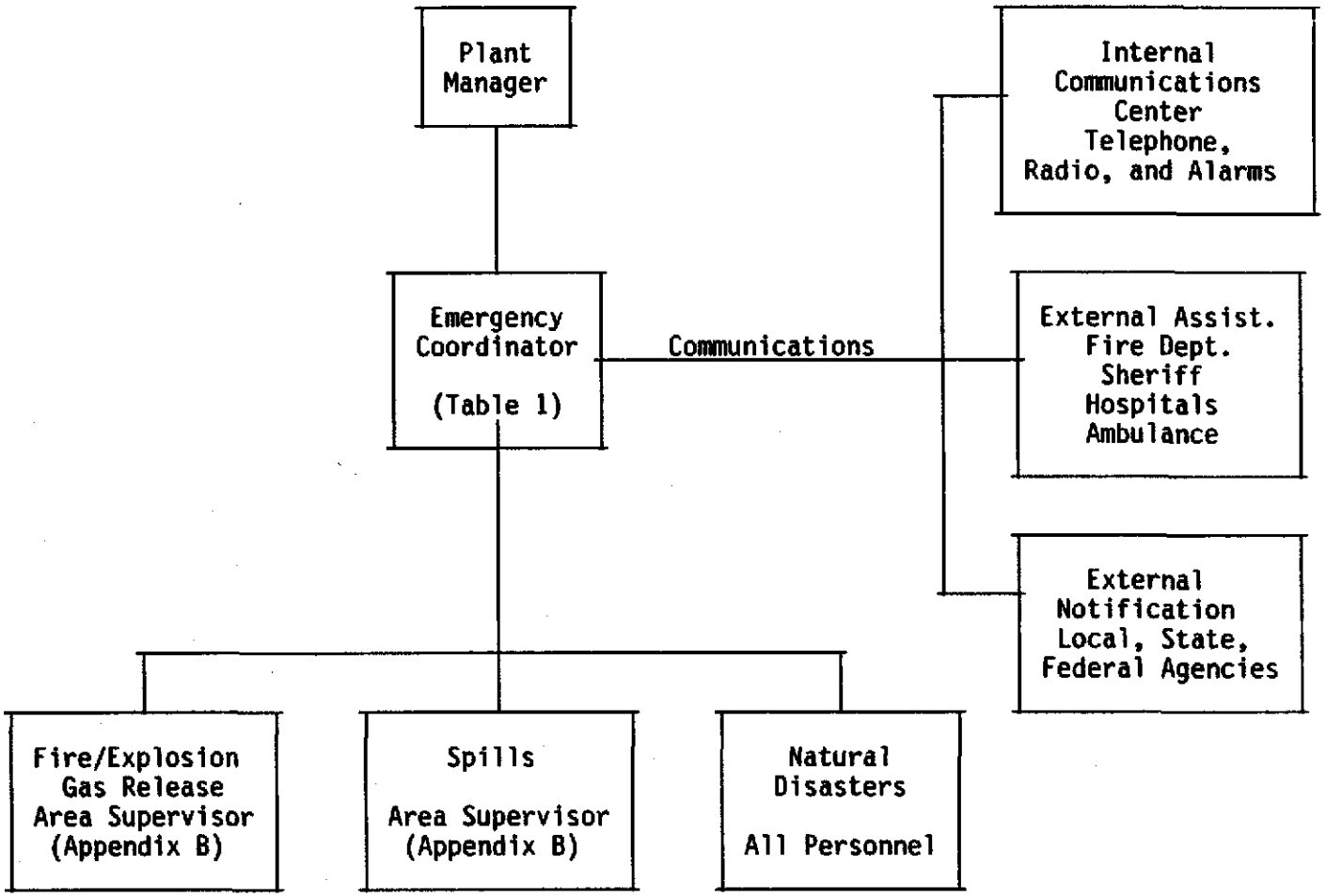

CED/CONT-FIG

APPENDIX A

LIST OF AGENCIES TO RECEIVE THE CONTINGENCY PLAN

LIST OF AGENCIES TO RECEIVE THE CONTINGENCY PLAN

Cedar Corporate Office

Cedar Vicksburg Facility

Warren County Civil Defense

Vicksburg Fire Department

Mercy Regional Medical Center Emergency Room

Vicksburg Hospital Emergency Room

Vicksburg Police Department

Warren County Sheriff's Department

CEDAR CHEMICAL CORPORATION

24th Floor • 5100 Poplar Avenue • Memphis, TN 38137 • 901-685-5348

REPLY TO: P.O. BOX 3
VICKSBURG, MS 39181
(601) 636-1231

CONTINGENCY PLAN FOR CEDAR CHEMICAL CORPORATION

The Vicksburg Police Department been issued a copy of the Contingency Plan for Cedar Chemical Corporation's Vicksburg Chemical Division, Vicksburg, MS, in conformance with the existing federal regulations .

Delivered by: _____

Received by: _____

Date: 7-12-89

CEDAR CHEMICAL CORPORATION

24th Floor • 5100 Poplar Avenue • Memphis, TN 38137 • 901-685-5348

REPLY TO: P.O. BOX 3
VICKSBURG, MS 39181
(601) 636-1231

CONTINGENCY PLAN FOR CEDAR CHEMICAL CORPORATION

The Vicksburg Medical Center has been issued a copy of the Contingency Plan for Cedar Chemical Corporation's Vicksburg Chemical Division, Vicksburg, MS, in conformance with the existing federal regulations .

Delivered by: [illegible]

Received by: Jeri Gartman

Date: 7-12-89

CEDAR CHEMICAL CORPORATION

24th Floor • 5100 Poplar Avenue • Memphis, TN 38137 • 901-685-5348

REPLY TO: P.O. BOX 3
VICKSBURG, MS 39181
(601) 636-1231

CONTINGENCY PLAN FOR CEDAR CHEMICAL CORPORATION

The Mercy Regional Medical Center been issued a copy of the Contingency Plan for Cedar Chemical Corporation's Vicksburg Chemical Division, Vicksburg, MS, in conformance with the existing federal regulations .

Delivered by: _____

Received by: Mitchell D. Monaghan

Date: July 12, 1989

CEDAR CHEMICAL CORPORATION

24th Floor • 5100 Poplar Avenue • Memphis, TN 38137 • 901-685-5348

REPLY TO: P.O. BOX 3
VICKSBURG, MS 39181
(601) 636-1231

CONTINGENCY PLAN FOR CEDAR CHEMICAL CORPORATION

The Warren County Civil Defense Office has been issued a copy of the Contingency Plan for Cedar Chemical Corporation's Vicksburg Chemical Division, Vicksburg, MS, in conformance with the existing federal regulations .

Delivered by: [signature]

Received by: Gwen Krol
Admn. Ofcr.

Date: July 12, 1989

CEDAR CHEMICAL CORPORATION

24th Floor • 5100 Poplar Avenue • Memphis, TN 38137 • 901-685-5348

REPLY TO: P.O. BOX 3
VICKSBURG, MS 39181
(601) 636-1231

CONTINGENCY PLAN FOR CEDAR CHEMICAL CORPORATION

The Warren County Sheriff's Office has been issued a copy of the Contingency Plan for Cedar Chemical Corporation's Vicksburg Chemical Division, Vicksburg, MS, in conformance with the existing federal regulations .

Delivered by: _____

Received by: _____

Date: 6-12-89

CEDAR CHEMICAL CORPORATION

24th Floor • 5100 Poplar Avenue • Memphis, TN 38137 • 901-685-5348

REPLY TO: P.O. BOX 3
VICKSBURG, MS 39181
(601) 636-1231

CONTINGENCY PLAN FOR CEDAR CHEMICAL CORPORATION

The Vicksburg Fire Department has been issued a copy of the Contingency Plan for Cedar Chemical Corporation's Vicksburg Chemical Division, Vicksburg, MS, in conformance with the existing federal regulations .

Delivered by: [illegible]

Received by: Rose Barnes

Date: 7-12-89

APPENDIX B

CHEMICALS CONTINGENCIES WITH SPILL CONTROL AND HAZARD DATA

Chemical Name: Anhydrous Ammonia

Equipment: 11, 12, 13 and two spherical tanks; Carbon Steel

Location: See Figure 1.

Capacity: 3 tanks each 11, 295 gallons and each spherical tank of 3,000 tons capacity

Handling and Storage: Outdoors or detached storage is preferred separate from other chemicals, particularly oxidizing gases, chlorine, bromine, iodine, and acids. Cylinders should be stored in a well ventilated location protected from direct sunlight and all possible percussions. Wear face shield, chemical cartridge respirator, rubber gloves, and boots.

Incompatibilities: Strong oxidizers, calcium, hypochlorite bleaches, gold, mercury, silver, chlorates, and halogens.

Routes of Entry: Inhalation of gas, ingestion, skin, and eye contact.

Points of Attack: Lungs, respiratory system, and eyes.

Personal Protective Methods: Where ammonia hazards exist in concentrations above the standard, respiratory, eye, and skin protection should be provided. Gas masks with ammonia canister or supplied air respirators, both with full facepieces, afford good protection. In areas where exposure to liquid ammonia occurs, goggles or face shields, as well as protective clothing impervious to ammonia and including gloves, aprons, and boots should be required. Where ammonia gas or concentrated ammonia solution is splashed in eyes, immediate flooding of the eyes with large quantities of water for 15 minutes or longer is advised, followed at once by medical examination.

In heavy concentrations of ammonia gas, workers should be outfitted with complete self-contained protective suits impervious to ammonia (NH_3), with supplied air source, and full headpiece and facepiece. Appropriate clothing should be worn to prevent any possible skin contact with liquids of >10 percent content or reasonable probability of contact with liquids of <10 percent content. Wear eye protection to prevent any possibility of eye contact with liquids of >10 percent NH_3 content. Employees should wash immediately when skin is wet or contaminated with liquids of >10 percent content. Remove nonimpervious clothing immediately if wet or contaminated with liquids containing >10 percent and promptly remove if liquid contains <10 percent NH_3. Provide emergency showers and eyewash if liquids containing >10 percent NH_3 are involved.

First Aid: Flush eyes with water, and instill droplets of olive oil, if chemical gets into the eyes. Forcible removal of frozen clothing may tear the skin badly, hence proper thawing is recommended before undressing. Wash contaminated areas of body with soap and water. Administer oxygen, with use of intermittent positive pressure breathing apparatus. Apply bronchodilators and decongestants. Treat with codiene for cough. Sedation if necessary. Medicate with cortisone.

Symptoms of Exposure: Coughing, burning sensation, eye irritation and pain. Frozen areas turn white.

Spills and Leakage:
1. In case of spill, the material will vaporize rapidly. Full respiratory protection is needed.
2. Apply water mist to the vapor cloud, and evacuate downwind.
3. Neutralize with hydrochloric acid (HCL).
4. Wipe with mop or use water aspirator.

Fire Protection: Use water to keep fire-exposed containers cool and also to protect the men effecting the shut-off of the supplies.

Disposal and Waste Treatment: Dilute with water, neutralize with HCL and discharge to sewer.

Chemical Name: Betz KI-2

Equipment: 26, 26A; Carbon Steel and FRP respectively.

Location: See Figure 1.

Capacity: 1,000 and 580 gallons respectively.

Handling and Storage: Keep drums and containers closed when not in use. Protect from freezing and provide adequate ventilation.

Incompatibilities: Alkaline material.

Routes of Entry: Absorption, eye and skin contact, ingestion, inhalation.

Points of Attack: Respiratory system, eye and skin.

Personal Protective Methods: Wear rubber gloves and splash proof chemical goggles. Use respirator with dust/mist filters.

First Aid: In case of skin contact, remove contaminated clothing and wash exposed area with a large quantity of soap solution or water for 15 minutes. If the material contact the eyes, flush eyes with water for 15 minutes. Immediately contact a physician for additional treatment. If inhaled, remove victim from contaminated area to fresh air. Apply appropriate first aid treatment as necessary. Do not feed an unconscious or convulsive victim in the event of ingestion. Dilute contents of stomach and induce vomiting. Immediately contact a physician.

Symptoms of Exposure: May cause redness or itching of skin.

Spills and Leakage:
1. Contain and absorb on an absorbent material.
2. Place in waste disposal container.
3. Flushed the area with water and spread sand/grit.

Fire Protection: Fire can be extinguished by dry chemical, carbon dioxide, foam or water. Foam or water will create a slippery condition, spread sand or grit.

Disposal and Waste Treatment: Contaminated water may be sent to a sanitary sewer treatment facility. Waste can be incinerated or buried in a landfill.

Chemical Name: Betz 25K Series and Betz 445

Equipment: 26, 26A, Carbon Steel and FRP respectively.

Location: See Figure 1.

Capacity: 1,000 and 580 gallons respectively.

Handling and Storage: Keep containers closed when not in use. Protect from freezing.

Incompatibilities: Acidic material.

Routes of Entry: Eye and skin contact, ingestion and inhalation.

Points of Attack: Eye and skin, respiratory system.

Personal Protective Methods: Use a respirator with dust/mist filters. Wear rubber gloves and splash proof chemical goggles.

First Aid: In case of skin contact, remove contaminated clothing and wash exposed area with a large quantity of soap solution or water for 15 minutes. If the material contacts the eyes, flush eyes with water for 15 minutes. Immediately contact a physician for additional treatment. If inhaled, remove victim from contaminated area to fresh air. Apply appropriate first aid treatment as necessary. Do not feed an unconscious or convulsive victim in the event of ingestion. Dilute contents of stomach and induce vomiting. Immediately contact a physician.

Symptoms of Exposure: Causes severe irritation, burns, or tissue ulceration with subsequent scarring.

Spills and Leakage:
1. Contain and absorb on absorbent material.
2. Place in waste disposal container.
3. Flush area with water. Wet area may be slippery. If so, spread sand/grit.

Fire Protection: Use dry chemical, carbon dioxide, foam or water.

Disposal and Waste Treatment: Contaminated water may be sent to a sanitary sewer treatment facility. Waste may be incinerated or buried in approved landfill.

Chemical Name: Betz 35K, Series 35069

Equipment: 26, 26a; Carbon Steel and FRP respectively.

Location: See Figure 1.

Capacity: 1,000 and 580 gallons respectively.

Handling and Storage: Keep containers close and protect from freezing. If frozen, thaw completely and mix thoroughly prior to use.

Incompatibilities: Acidic material.

Routes of Entry: Eye and skin contact, inhalation, ingestion.

Points of Attack: Respiratory system, eye and skin.

Personal Protective Methods: Use a respirator with dust/mist filters. Wear gauntlet-type rubber gloves, chemical resistant apron, splash-proof chemical goggles and face shield.

First Aid: In case of skin contact contact a physician. Immediately flush eyes with water for 15 minutes and contact a physician. In case of ingestion, do not feed anything by mouth to an unconscious or convulsive victim. Do not induce vomiting. Immediately contact physician. Dilute contents of stomach using 3 to 4 glasses of milk or water.

Symptoms of Exposure: Causes severe irritation, burns, or tissue ulceration with subsequent scarring.

Spills and Leakage:
1. Contain and absorb on an absorbent material.
2. Place in waste disposal container.
3. Flush area with water. Wet area may be slippery. If so, spread sand/grit.

Fire Protection: Use dry chemical, carbon dioxide, foam or water. Fire fighters should wear positive pressure self-contained breathing apparatus.

Disposal and Waste Treatment: Contaminated water may be sent to a sanitary sewer treatment facility. Waste can be incinerated or buried in approved landfill.

Chemical Name: B.P. 6400 Series 6411

Equipment: 26, 26A; Carbon Steel and FRP respectively.

Location: See Figure 1.

Capacity: 1,000 and 580 gallons respectively.

Handling and Storage: Keep containers closed. Protect from freezing. If frozen, thaw completely and mix thoroughly prior to use.

Incompatibilities: None known.

Routes of Entry: Eye and skin contact, ingestion and inhalation.

Points of Attack: Eye and skin, respiratory system.

Personal Protective Methods: Use a respirator with dust/mist cartridges. Wear rubber gloves and splash-proof chemical goggles.

First Aid: Remove contaminated clothing. Wash exposed area with a large quantity of soap solution or water for 15 minutes. Immediately flush eyes with water for 15 minutes. Immediately contact a physician for additional treatment. In case of inhalation exposure remove victim from contaminated area to fresh air. Apply appropriate first aid treatment as necessary. Do not feed anything by mouth to an unconscious or convulsive victim upon ingestion. Do not induce vomiting. Immediately contact physician. Dilute contents of stomach using 3 to 4 glasses milk or water.

Symptoms of Exposure: May cause redness or itching of skin.

Spills and Leakage:
1. Contain and absorb on an absorbent material.
2. Place in waste disposal container.
3. Flush area with water. Wet area may be slippery. If so, spread sand/grit.

Fire Protection: Use dry chemical, carbon dioxide, foam or water. Fire fighters should wear positive pressure self-contained breathing apparatus (full-face piece type).

Disposal and Waste Treatment: Contaminated water may be sent to a sanitary sewer treatment facility. Waste can be buried in approved landfill or incinerated.

Chemical Name: 2-Sec-Butyl-4,6-Dinitrophenol (DINOSEB)

Equipment: 37, 39, 45, 46, 52, and 53; Stainless Steel except 39 is Carbon Steel (empty).

Location: See Figure 1.

Capacity: 23,700, 11,800, 12,855, 11,200, 9,795, and 10,100 gallons respectively.

Handling and Storage: Wear filter gas mask, self-contained breathing apparatus, protective clothing, and protective shoes. Avoid shocks, heat, and fire hazards.

Incompatibilities: Reducing materials, low flash point liquids, strong acids, oxiders, ignition sources.

Routes of Entry: Inhalation, ingestion, and skin absorption.

Points of Attack: Head, brain, skin, and respiratory systems.

Symptoms: Yellow staining of exposed parts of body; dermatitis; headache; nausea; vomiting; anorexia; abdominal pain; cramps; convulsions; dark urine.

Personal Protective Methods: Fire proof clothes and equipment and supplied air.

First Aid: Flush eyes with water. Wash contaminated areas of body with soap and water. Remove wash, discard or burn up contaminated gloves, clothing, or shoes. Take foods rich in carbohydrate, protein, and vitamin. No alcoholic drinks. Gastric lavage (stomach wash), if swallowed, follow up by saline catharsis. Seek medical aid.

Spills and Leakage:
1. For the spills on clothing, take off the clothing immediately and wash or dispose as per disposal and waste treatment below.
2. Spill shall be collected with necessary precaution for fire and removed in drums for disposal by burning.

Fire Protection: Material will decompose upon exposure to heat. Moderate fire hazard due to this spontaneous chemical reaction.

Disposal and Waste Treatment: The disposal should meet the regulatory requirements for hazardous material.

Chemical Name: o-sec-Butyl Phenol (OSBP)

Equipment: 57 and 58; Carbon Steel

Location: See Figure 1.

Capacity: 14,077 and 14,099 gallons each.

Handling and Storage: Wear safety glasses, filter gas mask, protective clothing and protective shoes. Avoid shocks, heat and ignition sources.

Incompatibilities: Strong oxidizers.

Routes of Entry: Inhalation, ingestion, and skin absorption.

Points of Attack: Skin, respiratory system.

Symptoms: Skin burns, mild respiratory irritation.

Personal Protective Methods: Wear safety glasses, respirator and protective clothing.

First Aid: Wash contaminated areas of body with soap and water. Remove wash, discard or burn up contaminated gloves, clothing or shoes.

Spills and Leakage:
1. Wash skin with soap and water thoroughly and immediately.
2. For the spills on clothing, take off the clothing immediately and wash or dispose by burning.
3. Spill shall be collected with necessary precaution for fire and removed in drums for disposal by burning.

Fire Protection: Fight fire by dry chemical, foam, or CO_2.

Disposal and Waste Treatment: By incineration.

Chemical Name: Chlorine

Equipment: 27; Carbon Steel

Location: See Figure 1.

Capacity: 2,000 pounds

Handling and Storage: Protect containers against physical damage. Cylinders and tin containers should be stored in cool, dry, relatively isolated areas, protected from weather and extreme temperature changes. Keep cylinders upright and secure them tightly so as they will remain upright. Store tin containers on their sides on rails few inches above the floor. Do not store full and empty containers together. Protect containers from external heat, and keep the storage area well ventilated. Separate from combustible, organic or easily oxidizable materials and especially isolate from acetylene, ammonia, hydrogen, hydrocarbons, ether, turpentine and finely divided metals. Store outdoors or in well-ventilated noncombustible construction, detached or segregated areas. Wear chemical goggles, chemical cartridge respirator.

Incompatibilities: Combustible substances and finely divided metals.

Routes of Entry: Inhalation, eye and skin contact.

Points of Attack: Lungs, respiratory system.

Personal Protective Methods: Whenever there is likelihood of excessive gas levels, workers should use respiratory protection in the form of fullface gas masks with proper canisters or supplied air respirators. The skin effects of chlorine can generally be controlled by good personal hygiene practices. Where very high gas concentrations or liquid chlorine may be present, full protective clothing, gloves, and eye protection should be used. Changing work clothes daily and showering after each shift where exposures exist are recommended.

First Aid: If this chemical gets in contact with the eyes, flush with water immediately. If this chemical contacts the skin, flush with water immediately. If a person breathes in large amounts of this chemical, move the exposed person to fresh air at once and perform artificial respiration, if required.

Symptoms of Exposure: Vapor - coughing, chocking, burning sensation in eyes and throat, and shortness of breath; liquid - severe irritating or blistering. Frostbite can also result.

Spills and Leakage:
1. Pass a gas release through a reducing agent (sodium bisulfite) and sodium bicarbonate solution with a trap in the line if possible.
2. Evacuate downwind.
3. Apply water mist to vapor cloud in order to absorb the vapors and collect the hydrochloric acid resulted in the process.

Fire Protection: Use water to keep fire-exposed containers cool.

Disposal and Waste Treatment: Use a large volume of concentrated solution of reducing agent (bisulfites or ferrous salts with 3M-H_2SO_4 or hypo). Neutralize with soda ash or dilute HCL. Drain into the sewer with abundant water.

Chemical Name: Corrogen

Equipment: 26, 26A; Carbon Steel and FRP respectively.

Location: See Figure 1.

Capacity: 1,000 and 580 gallons respectively.

Handling and Storage: Keep containers closed when not in use and store in a dry place.

Incompatibilities: None known.

Routes of Entry: Eye and skin contact, respiratory system.

Points of Attack: Eye and skin, inhalation, ingestion.

Personal Protective Methods: Use a respirator with dust/mist filters. Wear rubber gloves and airtight chemical goggles.

First Aid: In case of skin contact, remove contaminated clothing and wash exposed area with a large quantity of soap solution or water for 15 minutes. If the material contacts the eyes, flush eyes with water for 15 minutes. Immediately contact a physician for additional treatment. If inhaled, remove victim from contaminated area to fresh air. Apply appropriate first aid treatment as necessary. Do not feed anything by mouth to an unconscious or convulsive victim in the event of ingestion. Dilute contents of stomach and induce vomiting. Immediately contact a physician.

Symptoms of Exposure: May cause redness or itching of skin, tearing and pain in eyes (direct contact), may cause severe allergic responses (hives, bronchoconstriction) in hypersensitive individuals.

Spills and Leakage:
1. Sweep up and place in waste disposal container.
2. Spill residue may be neutralized with 3 percent hydrogen peroxide solution.

Fire Protection: Use dry chemical, carbon dioxide, foam or water. Fire fighters should wear positive pressure self-contained breathing apparatus (full-face piece type).

Disposal and Waste Treatment: Contaminated water may be sent to a sanitary sewer treatment facility. Waste may be buried in approved landfill or incinerated.

Chemical Name: COR-TROL 778P

Equipment: 26, 26A; Carbon Steel and FRP respectively.

Location: See Figure 1.

Capacity: 1,000 and 580 gallons respectively.

Handling and Storage: Keep containers closed, when not in use. Store with minimum exposure to light.

Incompatibilities: None known.

Routes of Entry: Eye and skin contact, ingestion, inhalation.

Points of Attack: Eye and skin, respiratory system.

Personal Protective Methods: Use a respirator with dust/mist filters. Wear rubber gloves and splash-proof chemical goggles.

First Aid: In case of skin contact, remove contaminated clothing and wash exposed area with a large quantity of soap solution or water for 15 minutes. If the material contacts the eyes, flush eyes with water for 15 minutes. Immediately contact a physician for additional treatment. If inhaled, remove victim from contaminated area to fresh air. Apply appropriate first aid treatment as necessary. Do not feed anything by mouth to an unconscious or convulsive victim in the event of ingestion. Dilute contents of stomach and induce vomiting. Immediately contact a physician.

Symptoms of Exposure: Prolonged, repeated exposure may result in brownish discoloration of the conjunctiva and changes in the cornea which may lead to decreased visual activity.

Spills and Leakage:
1. Contain and absorb on an absorbent material.
2. Place in waste disposal container.
3. Flush area with water. Wet area may be slippery. If so, spread sand/grit.

Fire Protection: Use dry chemical, carbon dioxide, foam or water.

Disposal and Waste Treatment: Contaminated water may be sent to a sanitary sewer treatment facility. Waste may be incinerated or buried in approved landfill.

CED/CONT-LIST2(9)

Chemical Name: Diesel Fuel

Equipment: 33; Carbon Steel

Location: See Figure 1.

Capacity: 500 gallons

Handling and Storage: Store away from ignition sources. Diesel fuel is stable even under fire exposure conditions, and is not a reactive material.

Incompatibilities: Ignition Sources, oxidizers.

Routes of Entry: Inhalation

Personal Protective Methods: Wear organic vapor respirator in the event of exposure to vapors.

First Aid: In the event of skin contact; flush with water and wash with soap. If a person breathes in large amounts of this chemical, move the exposed person to fresh air at once and perform artificial respiration.

Symptoms of Exposure: Ingestion - causes irritation of stomach and intestines, with nausea and vomiting; inhalation - headache, stupor.

Spills and Leakage: In the event of a leak or spill use water spray to disperse the vapors and to provide protection for men attempting to stop a leak. Water spray may be used to flush spills away from exposures.

Fire Protection: Use water spray, dry chemical, foam or carbon dioxide. Use water to keep fire-exposed containers cool.

Disposal and Waste Treatment: Diesel can be recycled from the water-diesel solution if a large amount is spilled. If the spill is small the spills can be collected in 55 gallons drums, and sent for treatment. If any soil is contaminated, it can be excavated and disposed in a landfill.

Chemical Name: Diethanolamine (DEoA)

Equipment: 55; Carbon Steel

Location: See Figure 1.

Capacity: 11,634 gallons

Handling and Storage: Avoid contact with liquid. Irritating to skin and eyes.

Incompatibilities: Strong oxidizers.

Routes of Entry: Ingestion, eyes and skin contact.

Points of Attack: Respiratory system, eyes, and skin.

Personal Protective Methods: Wear butyl rubber gloves, goggles, amine cartridge respirators and overalls.

First Aid: Remove contaminated clothing and shoes. Flush affected areas with plenty of water. If in eyes, hold eyelids open and flush with plenty of water. If swallowed and victim is conscious, have victim drink water or milk, and have victim induce vomiting. If swallowed and victim is unconscious or having convulsions, do nothing but keep victim warm.

Symptoms of Exposure: Itching or burning at points of contact.

Spills and Leakage:
1. Overspread sodium bisulfate and sprinkle water.
2. Collect the wash for disposal.

Fire Protection: Use water spray, dry chemical, alcohol foam, or carbon dioxide fire extinguishing agent. Use water to keep fire-exposed containers cool, to disperse the vapors, to flush spills away from exposures, to dilute spills to non-flammable mixtures and thus to prevent the spread of fires. The flammable limits in air for DEoA is in the range of 1.6 to 9.8 percent.

Disposal and Waste Treatment: The disposal should meet the regulatory requirements for disposal of hazardous material.

Chemical Name: Ethylene diamine tetracetic acid (Versene acid)

Equipment: 48; Stainless Steel

Location: See Figure 1.

Capacity: 7,050 gallons

Handling and Storage: Avoid contact with skin and eyes. Isolate and remove discharged material.

Incompatibilities: None known.

Routes of Entry: Eyes and skin contact.

Points of Attack: Bone, blood, skin, eyes.

Symptoms: Slight to moderate irritation.

Personal Protective Methods: Wear appropriate clothing including boots, gloves, etc., to prevent skin contact. Wear eye protection to prevent any reasonable probability of eye contact.

First Aid: Remove contaminated clothing and shoes. Flush affected areas with plenty of water. If solid gets in eyes, hold eyelids open and flush with plenty of water.

Spills and Leakage: In case of spill, flush with water. The free acid is less stable than its salts, and tends to decarboxylate when heated to temperatures of 150°.

Fire Protection: Not flammable and stable on boiling in aqueous solution.

Chemical Name: FLOMO C-13 (8x)

Equipment: 54; Carbon Steel

Location: See Figure 1.

Capacity: 11,650 gallons.

Handling and Storage: Store in cool place away from any ignition sources. Use non-sparking tools. Keep containers tightly closed. Do not use aluminum equipment above 49°C.

Incompatibilities: Strong oxidizing agent.

Routes of Entry: Inhalation, eye and skin contact, ingestion.

Points of Attack: Respiratory system, eye and skin, reproductive system, nervous system, and brain.

Personal Protective Methods: Wear personal protective equipment to avoid breathing vapors and skin and eye contact with the spilled material. Wear chemically resistant gloves, safety glasses with side shields or goggles.

First Aid: If exposed to vapors, give artificial respiration or cardiopulmonery resuscitation (CPR) if required. If breathing is difficult, give oxygen. Keep warm and quite. In case of eyes and skin contact wash with water. Remove contaminated clothes and wash before reuse.

Symptoms of Exposure: Inhalation - exposure may cause nasal and respiratory irritation and acute central nervous system depression characterized by headache, dizziness, staggering gait, confusion or unconsciousness. Asphyxiation may result from breathing oxygen deficient air. Skin contact - prolonged or repeated contact may cause irritation, defatting dermatitis. Eye contact - severe irritation. Ingestion - may cause gastrointestinal irritation, nausea, vomiting, and diarrhea.

Spills and Leakage:
1. Use inert material to absorb the spillage.
2. Vapors generated are heavier than air and may collect in low or confined areas. Barricade the spilled area and follow appropriate procedure including air monitoring for LEL.

Fire Protection: Water spray may be ineffective. Use foam, dry chemical or carbon dioxide. Cool fire exposed containers with water. Fog nozzles are preferable.

Disposal and Waste Treatment: The disposal should meet the regulatory requirements for disposal of ignitable hazardous material.

Chemical Name: Fuel Oil

Equipment: 22; Carbon Steel

Location: See Figure 1.

Capacity: 7,000 barrels

Handling and Storage: Store away from ignition sources. Fuel oil is stable even under fire exposure conditions, and is not a reactive material.

Incompatibilities: Ignition sources

Routes of Entry: Inhalation

Personal Protective Methods: Wear respirator in the event of exposure to vapors.

First Aid: In the event of skin contact; flush with water and wash with soap. If a person breathes in large amounts of this chemical, move the exposed person to fresh air at once and perform artificial respiration.

Symptoms of Exposure: Ingestion - gastrointestinal irritation; aspiration - pulmonary irritation is normally nominal but may become more severe several hours after exposure.

Spills and Leakage: In the event of a leak or spill use water spray to disperse the vapors and to provide protection for men attempting to stop a leak. Water spray may be used to flush spills away from exposures.

Fire Protection: Use water spray, dry chemical, foam or carbon dioxide. Use water to keep fire-exposed containers cool.

Disposal and Waste Treatment: Fuel oil can be recycled from the aqueous solution if a large amount is spilled. If the spill is small, the spills can be routed to process sewer and treated in the wastewater treatment plant. If any soil is contaminated, they can be excavated and disposed in a landfill.

Chemical Name: Isopropyl Alcohol

Equipment: 44; Carbon Steel

Location: See Figure 1.

Capacity: 14,097 gallons

Handling and Storage: Wear safety glasses, rubber gloves, a face shield, coveralls, and a multipurpose gas mask.

Incompatibilities: Strong oxidizers, ignition sources.

Routes of Entry: Inhalation of vapor, ingestion, eye, and skin contact.

Points of Attack: Eye, skin, and respiratory system.

Personal Protective Methods: Wear appropriate clothing to prevent repeated or prolonged skin contact. Wear eye protection to prevent any reasonable probability of eye contact. Employees should wash promptly when skin is wet or contaminated. Remove clothing immediately if wet or contaminated to avoid flammability hazard.

First Aid: If this chemical gets in contact with the eyes, flush with water immediately. If this chemical contacts the skin, flush with water. If a person breathes in large amounts of this chemical, move the exposed person to fresh air at once and perform artificial respiration. When this chemical has been swallowed gastric lavage (stomach wash) followed by saline catharsis. Give large quantities of saltwater and induce vomiting. Do not make an unconscious person vomit.

Symptoms of Exposure: Vapors cause mild irritation of eyes and upper respiratory tract, high concentrations may be anesthetic; liquid-irritates eyes and may cause injury, harmless to skin; ingested - causes drunkness and vomiting.

Spills and Leakage: Collect, containerize and dispose at approved disposal site.

Fire Protection: Use "alcohol" foam. Water spray is not effective to extinguish a fire but is effective to cool containers facing fire or to disperse spills before igniting.

Disposal and Waste Treatment: Containerized liquids that were collected should be incinerated. Contaminated soils can be incinerated or disposed at an approved landfill.

Chemical Name: Methanol

Equipment: 16 and 43; Carbon Steel (Empty)

Location: See Figure 1.

Capacity: 10,000 and 27,538 gallons

Handling and Storage: Store containers in well-ventilated place. Large volume storage should be remote from inhabited buildings or structures. Keep away from all sources of ignition. Wear chemical goggles or face shield, chemical cartridge respirator, rubber gloves, aprons, and boots.

Incompatibilities: Strong oxidizers.

Routes of Entry: Inhalation of vapor, percutaneous absorption of liquid, ingestion, eye and skin contact.

Points of Attack: Eyes, skin, central nervous system, gastrointestinal system.

Personal Protective Methods: Wear appropriate clothing to prevent repeated or prolonged skin contact. Wear eye protection to prevent any reasonable probability of eye contact. Employees should wash promptly when skin is wet. Remove clothing immediately if wet or contaminated to avoid flammability hazard.

First Aid: Flush eyes with water. Wash contaminated areas of body with soap and water. Hospitalize.

Symptoms of Exposure: Dizziness, unconsciousness, and sighing respiration.

Spills and Leakage:
1. Absorb spills or leak on paper.
2. Evaporate on a glass or iron dish in hood.
3. Burn the paper.

Fire Protection: Use dry chemical, alcohol foam, or carbon dioxide, water spray may be ineffective as an extinguishing agent, but water should be used to keep fire-exposed containers cool.

Disposal and Waste Treatment: The disposal should meet the regulatory requirements for hazardous material.

Chemical Name: Methyl Chloride

Equipment: 15; Carbon Steel

Location: See Figure 1.

Capacity: 10,000 gallons

Handling and Storage: Store in well-ventilated place controlled below 40°C. No exposure to direct sunlight. Protect containers against physical damage. No fire, no overlaying of heavy stocks; no mixed loading with explosives, poisons, radioactive materials, and organic peroxides. Wear rubber gloves, self-contained breathing apparatus and protective clothing.

Incompatibilities: Chemically active metals: sodium, potassium, powdered aluminum, zinc, and magnesium.

Routes of Entry: Inhalation and eye or skin contact.

Points of Attack: Liver, kidneys, skin, and central nervous system.

Personal Protective Methods: Wear appropriate clothing to prevent wetting or freezing of skin. Wear eye protection to prevent any reasonable probability of eye contact. Remove clothing immediately if wet or contaminated to avoid flammability hazard.

First Aid: If this chemical contacts the eyes, flush with water immediately. If this chemical contacts the skin, flush with water immediately. If a person breathes in large amounts of this chemical, move the exposed person to fresh air at once and perform artificial respiration. Treat with oxygen against shock, and, if indicated, administer stimulants.

Symptoms of Exposure: Dizziness, staggering gait, drowsiness, recovery is slow. Frost bitten areas will be white. Death may result from a single high exposure or repeated moderate exposures.

Spills and Leakage:
1. In case of spill, the material will vaporize rapidly. Full respiratory protection is needed.
2. Evacuate downwind.
3. Avoid any ignition sources.

Fire Protection: When fire occurs, close main valves and cool tanks with water spray. No hazardous reaction takes place due to the agent's chemical stability. Use dry powder extinguishers.

Disposal and Waste Treatment: Controlled incineration with adequate scrubbing and ash disposal facilities.

Chemical Name: Monosodium Acid Methane Arsonate (MSMA)

Equipment: 18, 19; FRP

Location: See Figure 1.

Capacity: 20,000 gallons each

Handling and Storage: Store in a cool place

Incompatibilities: Active metals, i.e., iron, aluminum, and zinc in presence of water.

Routes of Entry: Ingestion, inhalation.

Points of Attack: Eye and skin, respiratory system

Symptoms: Ulceration of nasal septum, dermatitis, gastrointestinal disturbance, respiratory irritation.

Personal Protective Methods: Wear goggles and protective clothing.

First Aid: Remove contaminated clothing and shoes. Flush affected areas with plenty of water. If swallowed and victim is conscious, have victim drink water or milk and have victim induce vomiting. If swallowed and victim is unconscious or having convulsions, do nothing except keep victim warm.

Spills and Leakage: Use absorbent for spilled material or pump into an appropriate container.

Fire Protection: Use regular fire fighting procedures.

Disposal and Waste Treatment: The disposal should meet the regulatory requirements for hazardous material.

Chemical Name: Neutramen NA7

Equipment: 26, 26A; Carbon Steel and FRP respectively.

Location: See Figure 1.

Capacity: 1,000 and 580 gallons respectively.

Handling and Storage: Keep container closed. Protect from freezing.

Incompatibilities: Acidic material.

Routes of Entry: Eye and skin contact, ingestion, inhalation.

Points of Attack: Eye and skin, respiratory system, reproductive system.

Personal Protective Methods: Use a respirator with organic vapor cartridges. Wear gauntlet-type rubber gloves, chemical resistant apron, splash proof chemical goggles and face shield.

First Aid: In case of skin contact, remove contaminated clothing and wash exposed area with a large quantity of soap solution or water for 15 minutes. If the material contacts the eyes, flush eyes with water for 15 minutes. Immediately contact a physician for additional treatment. If inhaled, remove victim from contaminated area to fresh air. Apply appropriate first aid treatment as necessary. Do not feed anything by mouth to an unconscious or convulsive victim in the event of ingestion. Dilute contents of stomach and induce vomiting. Immediately contact a physician.

Symptoms of Exposure: Inhalation - may cause light-headness, slurred speech, nausea, and vomiting (pulmonary edema may result); skin contact - can cause severe irritation or burns.

Spills and Leakage:
1. Contain and absorb on an absorbent material.
2. Place in waste disposal container.
3. Flush area with water. Wet area may be slippery. If so, spread sand/grit.

Fire Protection: Use dry chemical, carbon dioxide, foam or water. Fire fighters should wear positive pressure self-contained breathing apparatus (full-face piece type).

Disposal and Waste Treatment: Contaminated water may be sent to a sanitary sewer treatment facility. Waste may be incinerated or buried in approved landfill.

Chemical Name: Nitric Acid

Equipment: 1, 1A, 1B, 1C, and 2 through 9; Stainless Steel

Location: See Figure 1.

Capacity: 4-23,400; 2-11,430; 1-14,450; and 5-17,833 gallons

Handling and Storage: Protect against physical damage. Separate from metallic powders, carbides, hydrogen sulfide, turpentine, organic acids, and all combustible, organic, or other readily oxidizable materials. Provide good ventilation and avoid direct sunlight. Wear rubber gloves, self-contained breathing apparatus, protective working clothing, and body protective shield should be ready at any time.

Incompatibilities: Combustible organics; oxidizable matter-wood, turpentine, metal powder, hydrogen sulfide, etc., strong bases.

Routes of Entry: Skin and eye contact, inhalation of vapors, and ingestion.

Points of Attack: Eye, respiratory system, lungs, skin, and teeth.

Personal Protective Methods: Wear appropriate clothing to prevent any possibility of skin contact with liquids of pH <2.5 or repeated or prolonged contact with liquids of pH >2.5. Wear eye protection to prevent any possibility of eye contact. Employees should wash immediately when skin is wet or contaminated. Remove nonimpervious clothing immediately if wet or contaminated. Provide emergency showers and eyewash if liquids of pH <2.5 are involved.

First Aid: Flush eyes with water. If contacts with skin, flush immediately with water and wash using 5 percent of sodium biocarbonate, or soap. Burns should be treated with a cloth immersed in a saturated solution of potassium thiosulfate. If a person breathes in large amounts of this chemical, move the exposed person to fresh air at once and perform artificial respiration. If swallowed orally administer with soap solution, calcium hydroxide, or ammonium hydroxide or magnesium oxide.

Symptoms of Exposure: Smarting, itching, and yellow discoloration upon skin contact. If acid is not removed at once, intense pain and severe burns result.

Spills and Leakage:
1. Cover with sodium carbonate or an equal mixture of soda ash and slaked lime.
2. After mixing, add water if necessary to form a slurry.

Fire Protection: Water can be used to fight any fire breakout.

Disposal and Waste Treatment: Soda ash-slaked lime is added to form the neutral solution of nitrate of sodium and calcium. This solution can be discharged after dilution with water.

Chemical Name: POLYFON H Solution

Equipment: 28; Carbon Steel.

Location: See Figure 1.

Capacity: 7,638 gallons.

Handling and Storage: Do not store in aluminum containers. Keep away from flames or ignition sources.

Incompatibilities: Aluminum, strong oxidizing agents.

Routes of Entry: Eye and skin contact, ingestion.

Points of Attack: Eye and skin.

Personal Protective Methods: Wear rubber gloves and bubble goggles.

First Aid: Wash skin with water. Flush eyes with water repeatedly. If ingested excessively, consult physician immediately.

Symptoms of Exposure: Minor eye irritant, irritating to skin.

Spills and Leakage:
1. Dike up and pump to appropriate containers.
2. Absorb with sawdust or other absorbent.

Fire Protection: Use water, carbon dioxide or foam.

Disposal and Waste Treatment: Can be disposed in a landfill or flushed to the sewer with water.

Chemical Name: Polyglycol

Equipment: 51; Carbon Steel (empty)

Location: See Figure 1.

Capacity: 7,888 gallons

Handling and Storage: Stored in a cool dry place away from any ignition sources.

Incompatibilities: None known.

Routes of Entry: Ingestion, skin and eye contact.

Personal Protective Methods: Wear complete protective clothing including goggles and face mask.

First Aid: If the material contacts the eyes, hold eyelids open and flush with plenty of water. If swallowed and victim is conscious have victim drink water or milk.

Symptoms of Exposure: Contact of liquid with eyes causes slight transient pain and irritation similar to that caused by a mild soap.

Spills and Leakage:
1. Keep unnecessary people away from the spill.
2. Isolate and remove discharged material.
3. The liquid can be pumped into tanks or drums for disposal.

Fire Protection: Fight fire with foam or dry chemical.

Chemical Name: Slimicide C41, C74, J12 and C31.

Equipment: 26, 26A, Carbon Steel and FRP respectively.

Location: See Figure 1.

Capacity: 1,000 and 580 gallons respectively.

Handling and Storage: Keep containers closed when not in use. Store in cool ventilated location. Keep away from ignition sources. Bond containers during filling or discharge when performed at temperatures at or above the product flash point.

Incompatibilities: Oxidizers, alkaline material.

Routes of Entry: Ingestion, inhalation, eye and skin contact.

Points of Attack: Eye and skin, respiratory system, reproductive system.

Personal Protective Methods: Wear organic vapor/acid gas and dust/mist respirator, gauntlet-type neoprene gloves, chemical resistant apron, splashproof chemical goggles and face shield.

First Aid: In case of skin contact, remove contaminated clothing and wash exposed area with a large quantity of soap solution or water for 15 minutes. If the material contacts the eyes, flush eyes with water for 15 minutes. Immediately contact a physician for additional treatment. If inhaled, remove victim from contaminated area to fresh air. Apply appropriate first aid treatment as necessary. Do not feed anything by mouth to an unconscious or convulsive victim in the event of ingestion. Dilute contents of stomach and induce vomiting. Immediately contact a physician.

Symptoms of Exposure: Inhalation - may cause irritation of mucous membranes and respirator tract. Skin contact - causes sever irritation or burns.

Spills and Leakage:
1. Contain and absorb on absorbent material place in a waste disposal container.
2. Remove ignition sources. Flush area with water. Spread sand or grit.
3. Active ingredients may be degraded by treating with an aqueous solution of 5 percent sodium hydroxide and 5 percent sodium sulfite or sodium bisulfite. A combination of caustic soda and sodium thiosulfate may also be used.

Fire Protection: Use dry chemical, water or foam. Fire fighters should wear self-contained breathing apparatus.

Disposal and Waste Treatment: Contaminated water can be sent to a sanitary sewer treatment facility. Waste can be disposed in an approved pesticide facility.

Chemical Name: Sodium Hydroxide

Equipment: 31 and 32; Carbon Steel

Location: See Figure 1.

Capacity: 18,800 and 15,100 gallons

Handling and Storage: Protect against physical damage of container. Store in dry place. Protect against moisture and water. Separate from acids, metals, explosives, organic peroxides and easily ignitable materials. Wear chemical goggles or full face shield, mechanical filter respirator, rubber gloves, aprons, and boots.

Incompatibilities: Water, acids, flammable liquids, organic halogens, metals: aluminum, tin, zinc; nitromethane, and nitro compounds.

Routes of Entry: Inhalation of dust or mist, ingestion, skin, and eye contact.

Points of Attack: Eyes, respiratory system, skin, and lungs.

Personal Protective Methods: Wear appropriate clothing to prevent any possibility of skin contact. Wear eye protection to prevent any possibility of eye contact. Employees should wash immediately when skin is wet or contaminated. Work clothing should be changed daily if it is possible that clothing is contaminated. Remove nonimpervious clothing immediately if wet or contaminated. Provide emergency showers and eyewash.

First Aid: Flush eyes with water if the chemical gets into the eyes or contacts the skin. If a person breathes in large amounts of this chemical, move the exposed person to fresh air and perform artificial respiration if needed. If this chemical is swallowed gastric lavage with 5 percent acetic acid, using great care not to perforate the gastrointestinal tract, followed by instillation of olive oil or demulcents (protective agents from irritation).

Symptoms of Exposure: If the solution splashes onto the skin, no pain may be felt, but hair and skin touched by caustic will begin to dissolve on contact.

Spills and Leakage:
1. Sodium hydroxide solution is extremely corrosive and should be treated with care and caution. This material will solidify at about 50°F.
2. The spill area should be barricaded and protective clothing shall be worn.
3. Neutralize with hydrochloric acid (HCL).
4. Wipe with mop or use water vacuum.
5. If it has solidified, it may be shoveled or scooped into a leak-proof container. Dilute with water and neutralize with 6M-HCL.

Fire Protection: Flood with water, using care not to splatter or splash this material.

Disposal and Waste Treatment: Discharge after neutralization.

Chemical Name: Sulfite 3

Equipment: 26, 26A; Carbon Steel and FRP respectively.

Location: See Figure 1.

Capacity: 1,000 and 580 gallons respectively.

Handling and Storage: Keep containers closed. Protect from freezing.

Incompatibilities: Alkaline material.

Routes of Entry: Eye and skin contact, ingestion and inhalation.

Points of Attack: Eye and skin, respiratory system.

Personal Protective Methods: Use a respirator with dust/mist cartridges. Wear rubber gloves and splash proof chemical goggles.

First Aid: In case of skin contact, remove contaminated clothing and wash exposed area with a large quantity of soap solution or water for 15 minutes. If the chemical contacts the eyes, flush eyes with water for 15 minutes. Immediately contact a physician for additional treatment. If inhaled, remove victim from contaminated area to fresh air. Apply appropriate first aid treatment as necessary. Do not feed anything by mouth to an unconscious or convulsive victim in the event of ingestion. Dilute contents of stomach and induce vomiting. Immediately contact a physician.

Symptoms of Exposure: May cause redness or itching of skin, tearing and pain in eyes (direct contact), may cause severe allergic responses (hives, bronchoconstriction) in hypersensative individuals.

Spills and Leakage:
1. Contain and absorb on an absorbent material.
2. Place in waste disposal container.
3. Flush area with water. Wet area may be slippery. If so, spread sand/grit.

Fire Protection: Use dry chemical, carbon dioxide, foam or water. Fire fighters should wear positive pressure self-contained breathing apparatus (full-face piece type).

Disposal and Waste Treatment: Contaminated water may be sent to a sanitary sewage treatment facility. Waste may be incinerated or buried in approved landfill.

Chemical Name: Sulfuric Acid

Equipment: 29 and 30; Carbon Steel (empty)

Location: See Figure 1.

Capacity: 15,00 gallons each

Handling and Storage: Protect containers against physical damage and prevent contacts with water. Separate from carbide, chlorates, fulminates, nitrates, picrates, powdered metals, and combustible materials. Wear rubber gloves, chemical goggles, rubber boots, and chemical cartridge respirator.

Incompatibilities: Organics, chlorates, carbides, fulminates, picrates, metals, and nitrates.

Routes of Entry: Inhalation of mist, ingestion, eye and skin contact.

Points of Attack: Respiratory system, eyes, skin, teeth, and lungs.

Personal Protective Methods: Wear appropriate clothing to prevent any possibility of skin contact with liquids of >1.0 percent content or repeated or prolonged contact with liquids of <1.0 content. Wear eye protection to prevent any possibility of eye contact. Employees should wash immediately when skin is wet or contaminated. Remove nonimpervious clothing immediately if wet or contaminated. Provide emergency showers and eyewash if liquids containing >1.0 percent contaminants are involved.

First Aid: Flush with water if this chemical gets into the eyes or contacts with skin. Wash contact area using soap. If a person breathes in large amounts of this chemical, move the exposed person to fresh air and perform artificial respiration if needed. When this chemical is swallowed get medical attention. Give large quantities of water and do not induce vomiting. Administer oxygen, with use of intermittent positive-pressure breathing apparatus: 5 percent solution of sodium bicarbonate as aerosol may be used, as well as broncodilators and decongestants.

Symptoms of Exposure: The inhalation hazard is slight at ordinary temperatures. The skin on which acid is spilled may feel hot or it may sting or itch.

Spills and Leakage:

1. In case of spill, barricade the area.
2. Cover the acid with sodium carbonate or an equal mixture of soda ash and slaked lime.
3. When neutralized, material may be drained to the process sewer or the ditch, preferably the former.
4. Follow with washdown of area with water.

Fire Protection: Fire involving small amount of combustibles may be smothered with suitable dry chemicals. Use water on combustibles burning in vicinity of this material but use care as water applied directly to this acid results in evolution of heat and causes splattering.

Disposal and Waste Treatment: Add slowly to a large amount of solution of soda ash and slaked lime by stirring.

Chemical Name: Triethanolamine (TEoA)

Equipment: 56; Carbon Steel

Location: See Figure 1.

Capacity: 14,099 gallons

Handling and Storage: Protect against physical damage. Store in a cool, dry, well-ventilated location, away from any area where the fire hazard may be acute. Outside or detached storage is preferred. Isolate from acidic materials.

Incompatibilities: Copper or copper alloys, unstable at elevated temperatures, ignition sources, strong acids.

Routes of Entry: Inhalation, eyes and skin contact.

Points of Attack: Eyes and skin contact, respiratory system.

Personal Protective Methods: When the material is exposed to heat or flame, wear self-contained breathing apparatus, wear goggles if eye protection is not provided.

First Aid: Remove contaminated clothing and shoes. Flush affected areas with plenty of water. If the chemical contacts the eyes, hold eyelids open and flush with plenty of water. If swallowed and victim is conscious, induce vomiting; if unconscious, keep victim warm and do not induce vomiting.

Symptoms of Exposure: Itching or burning of skin at areas of contact. If inhaled, the respiratory passages will be irritated.

Spills and Leakage:
1. Overspread sufficient sodium bisulfate and sprinkle water.
2. Collect or drain into a sewer.

Fire Protection: Use water spray, dry chemical, "alcohol": foam or carbon dioxide. Water or foam may cause frothing. Use water to keep fire-exposed containers cool. Water may be used to flush spills away from exposures and to dilute spills to noncombustible mixtures.

Disposal and Waste Treatment: The disposal should meet the regulatory requirements for hazardous material.

Chemical Name: Toluene

Equipment: 42, 50; Carbon Steel (empty but contaminated).

Location: See Figure 1.

Capacity: 14,100 and 12,955 gallons

Handling and Storage: Protect containers against physical damage. Outdoors or detached or isolated storage is preferable. Indoor storage should be in a standard flammable liquid storage room. Wear chemical goggles, chemical cartridge respirator or self-contained breathing apparatus and rubber gloves.

Incompatibilities: Strong oxidizers, ignition sources.

Routes of Entry: Inhalation of vapor, percutaneous absorption of liquid, ingestion, skin and eye contact.

Points of Attack: Central nervous system, liver, kidneys, and skin.

Personal Protective Methods: Wear appropriate clothing to prevent repeated or prolonged skin contact. Wear eye protection to prevent any reasonable probability of eye contact. Employees should wash promptly when skin is wet or contaminated. Remove clothing immediately if wet or contaminated to avoid flammability hazard.

First Aid: If this chemical contacts the eyes, flush with water immediately. If this chemical contacts the skin, wash with soap promptly. If a person breathes in large amounts of this chemical, move the exposed person to fresh air and perform artificial respiration if needed. When this chemical has been swallowed, get medical attention. Do not induce vomiting.

Symptoms of Exposure: Nausea, dizziness, and headache. The victim may appear to be drunk.

Spills and Leakage: Collect, containerize and dispose at approved disposal site.

Fire Protection: Use water spray, carbon dioxide, dry chemical, or foam. The flammable limits for toluene are in the range of 1.27 to 7.0 percent.

Disposal and Waste Treatment: The disposal should meet the regulatory requirements for hazardous material.

CEDAR CHEMICAL CORPORATION

24th Floor • 5100 Poplar Avenue • Memphis, TN 38137 • 901-685-5348

REPLY TO: P.O. BOX 3
VICKSBURG, MS 39181
(601) 636-1231

CONTINGENCY PLAN FOR CEDAR CHEMICAL CORPORATION

The Vicksburg Police Department been issued a copy of the Contingency Plan for Cedar Chemical Corporation's Vicksburg Chemical Division, Vicksburg, MS, in conformance with the existing federal regulations .

Delivered by: _____

Received by: _____

Date: 7-12-89

CEDAR CHEMICAL CORPORATION

24th Floor • 5100 Poplar Avenue • Memphis, TN 38137 • 901-685-5348

REPLY TO: P.O. BOX 3
VICKSBURG, MS 39181
(601) 636-1231

CONTINGENCY PLAN FOR CEDAR CHEMICAL CORPORATION

The Vicksburg Medical Center has been issued a copy of the Contingency Plan for Cedar Chemical Corporation's Vicksburg Chemical Division, Vicksburg, MS. in conformance with the existing federal regulations .

Delivered by: [illegible]

Received by: Jeri Hartman

Date: 7-12-89

CEDAR CHEMICAL CORPORATION

24th Floor • 5100 Poplar Avenue • Memphis, TN 38137 • 901-685-5348

REPLY TO: P.O. BOX 3
VICKSBURG, MS 39181
(601) 636-1231

CONTINGENCY PLAN FOR CEDAR CHEMICAL CORPORATION

The Mercy Regional Medical Center been issued a copy of the Contingency Plan for Cedar Chemical Corporation's Vicksburg Chemical Division, Vicksburg, MS, in conformance with the existing federal regulations .

Delivered by: [signature]

Received by: Mitchell D. Monazon

Date: July 12, 1989

CEDAR CHEMICAL CORPORATION

24th Floor • 5100 Poplar Avenue • Memphis, TN 38137 • 901-685-5348

REPLY TO: P.O. BOX 3
VICKSBURG, MS 39181
(601) 636-1231

CONTINGENCY PLAN FOR CEDAR CHEMICAL CORPORATION

The Warren County Civil Defense Office has been issued a copy of the Contingency Plan for Cedar Chemical Corporation's Vicksburg Chemical Division, Vicksburg, MS, in conformance with the existing federal regulations .

Delivered by: [illegible]

Received by: Gwen Byrd
Admin. Asst.

Date: July 12, 1989

CEDAR CHEMICAL CORPORATION

24th Floor • 5100 Poplar Avenue • Memphis, TN 38137 • 901-685-5348

REPLY TO: P.O. BOX 3
VICKSBURG, MS 39181
(601) 636-1231

CONTINGENCY PLAN FOR CEDAR CHEMICAL CORPORATION

The Warren County Sheriff's Office has been issued a copy of the Contingency Plan for Cedar Chemical Corporation's Vicksburg Chemical Division, Vicksburg, MS. in conformance with the existing federal regulations .

Delivered by: _____

Received by: _____

Date: 6-12-89

CEDAR CHEMICAL CORPORATION

24th Floor • 5100 Poplar Avenue • Memphis, TN 38137 • 901-685-5348

REPLY TO: P.O. BOX 3
VICKSBURG, MS 39181
(601) 636-1231

CONTINGENCY PLAN FOR CEDAR CHEMICAL CORPORATION

The Vicksburg Fire Department has been issued a copy of the Contingency Plan for Cedar Chemical Corporation's Vicksburg Chemical Division, Vicksburg, MS, in conformance with the existing federal regulations .

Delivered by: _____

Received by: Rose Barnes

Date: 7-12-81

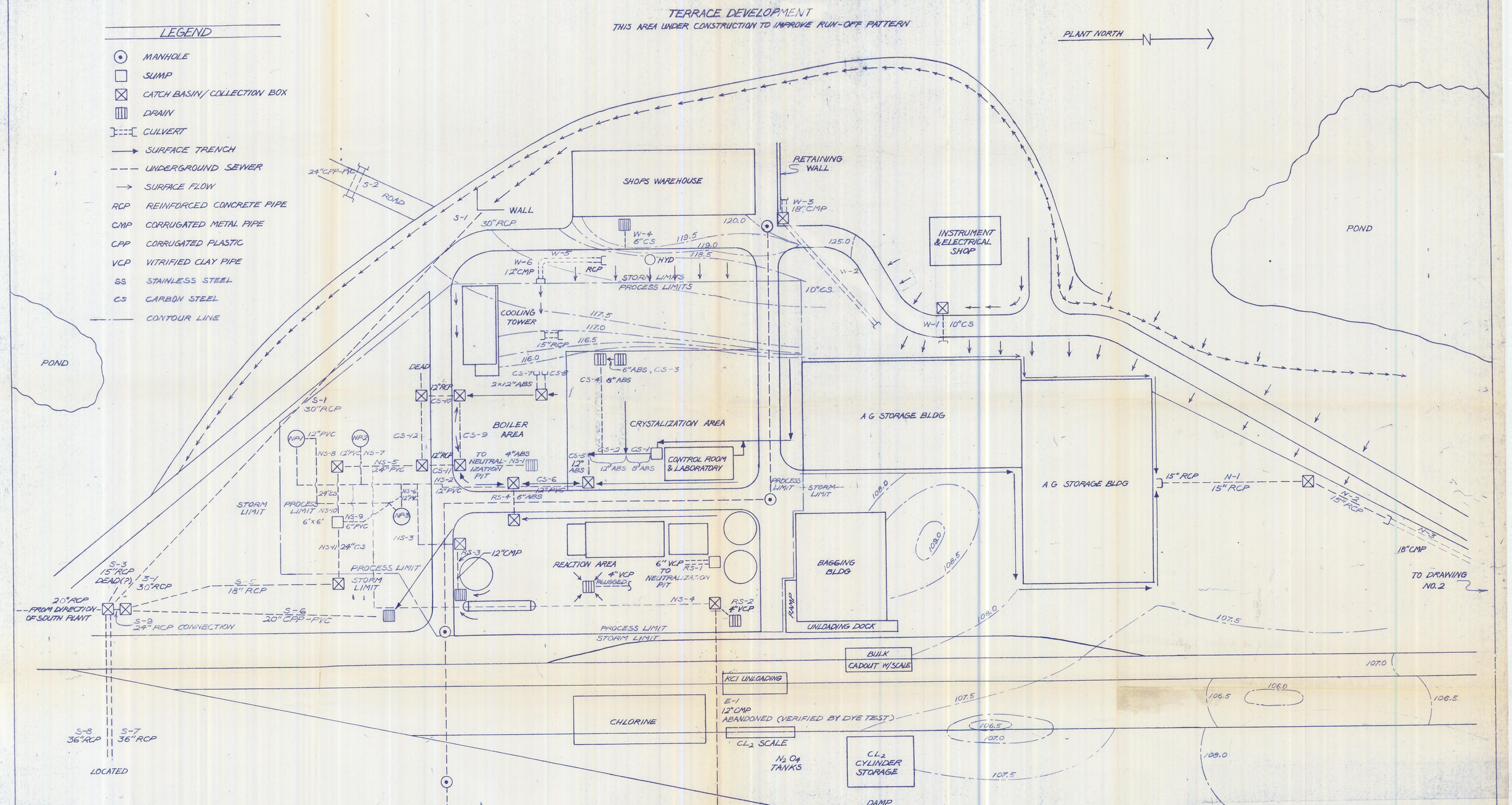

RECEIVED
NOV 12 1986
DEPARTMENT OF ENVIRONMENTAL RESOURCE
BUREAU OF POLLUTION CONTROL

ENVIRONMENTAL PROTECTION SYSTEMS, INC.
ENGINEERING, ANALYTICAL, & PLANNING CONSULTANTS
JACKSON, MS PENSACOLA, FL MOBILE, AL

PROJECT TITLE: VERTAC CHEMICAL CORP. SEWER SYSTEM MAP	
SCALE: 1" = 40'	DRAWN BY: SJA
DATE: 12-13-85	APPROVED BY: JED
PROJECT NUMBER: 185,7953.02	DRAWING NUMBER: 1

REVISIONS	
NO.: 1	
BY: JED	
DATE: 3-18-86	

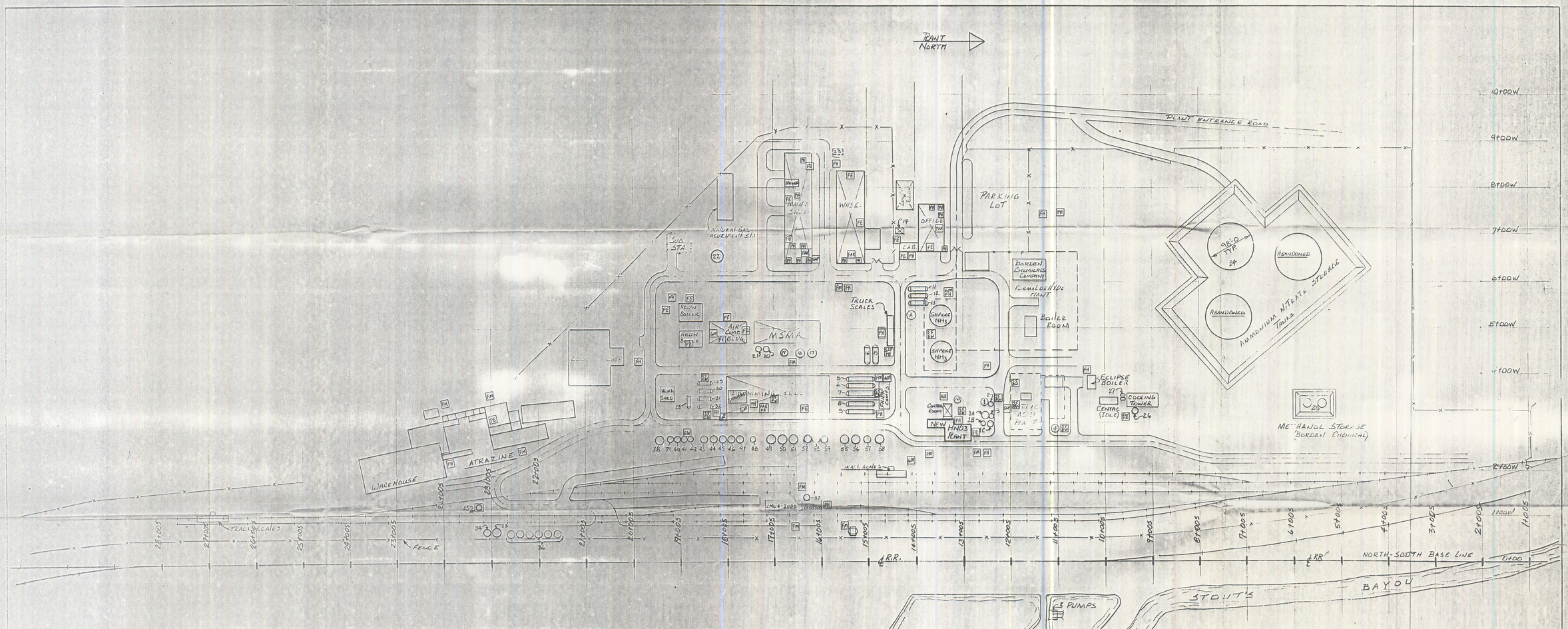

TANK LEGEND

1	Nitric Acid Storage	31	15% Sodium Hydroxide Tank
2	" " "	32	50% " " "
3	" " "	33	Diesel Fuel Tank
4	" " "	34	South River Tank
5	" " "	35	North River Tank
6	" " "	36	Calgon Carbon Treatment Tanks
7	" " "	37*	East Dinitro Storage (Empty)
8	" " "	38	PCL3 Tank (Not in use)
9	" " "	39*	Premerge 3 Tank (Empty)
10	Demineralized Water Tank	40	Toxaphene (Dismantled)
11	Ammonia Burn Tank	41	Toxaphene (Dismantled)
12	Ammonia Burn Tank	42*	Toluene (Empty)
13	Ammonia Scale Tank	43*	Methanol (Empty)
14	Emergency Chemical Storage Shed	44	IPA
15	Nitric Chloride Tank	45*	South Tech (Empty)
16	Methanol Storage Tank (Empty)	46*	31% Blend Tank (Empty)
17	Sodium Arsenite Tank (Empty)	47	Reactor Tank (Removed)
18	MSMA Storage	48	Versene Tank
19	MSMA Storage	49	Empty
20	Process Water Storage	50*	Toluene Tank (Empty)
21	Drain Water Storage (Empty)	51	Poly Glycol " (Empty)
22	Fuel Oil Storage	52*	North Tech " (Empty)
23	Underground Gasoline (Removed)	53	General Blend Tank
24	Dinitro Sludge Tank (Removed)	54	Flomo 8X Tank
25	Methanol Storage Tanks (Borden)	55	DEDA "
26	Boro Chemical Tank (25%)	56	TEDA "
27	Chlorine Cylinder Storage	57	DSBP "
28	Polyron " Tank	58	DSBP "
29	Sulfuric Acid Storage (Empty)	14,15	Nitric Acid Storage
30	Sulfuric Acid Storage (Empty)	16A	Boro H2O Chemical

* Contaminated with residues.

INDEX

FH	Firehose
FM	Facemask
FE	Fire Extinguisher
EW	Eye Wash
SS	Safety Shower
GM	Gas Mask
FAK	First Aid Kit
PH	Phone
SAP	Scott Air Pack
(A)	Loading/Unloading Pad

RECEIVED
OCT 2 0 1989
DEPT. OF NATURAL RESOURCE
BUREAU OF POLLUTION CONTROL

VICKSBURG CHEMICAL DIV.
OF
CEDAR CHEMICAL CORP.
P. O. BOX 3
VICKSBURG, MISSISSIPPI 39180
TELEPHONE (601) 636-1231

FIGURE 1

LOCATION OF EMERGENCY EQUIPMENT

SCALE Approx. 1" = 100'	APPROVAL—TECHNICAL
DWN S. LANDERS	APPROVAL—PRODUCTION
CKD	APPROVAL—SAFETY
DATE 4-17-85	NO. Sketch 85-011