BEFORE THE COMMISSION ON NATURAL RESOURCES

MISSISSIPPI BUREAU OF POLLUTION CONTROL

VERSUS ADMIN. CASE NO. _____

VICKSBURG CHEMICAL COMPANY, A DIVISION
OF CEDAR CHEMICAL COMPANY

MEMORANDUM TO COMMISSIONERS

EDWIN LLOYD PITTMAN
ATTORNEY GENERAL
STATE OF MISSISSIPPI

J. ARTHUR PRESTAGE
SPECIAL ASSISTANT
ATTORNEY GENERAL

POST OFFICE BOX 220
JACKSON, MISSISSIPPI
TELEPHONE: (601) 359-3680

BEFORE THE COMMISSION ON NATURAL RESOURCES

MISSISSIPPI BUREAU OF POLLUTION CONTROL

VERSUS ADMIN. CASE NO. _____

VICKSBURG CHEMICAL COMPANY, A DIVISION
OF CEDAR CHEMICAL COMPANY

MEMORANDUM TO COMMISSIONERS

STATEMENT OF FACTS

During a period of time from November, 1980 until it ceased operation in 1982, Vicksburg Chemical Company manufactured toxaphene, a highly toxic pesticide which has since been banned from the market due to its adverse ecological and environmental effects. From the inception of the Facility's toxaphene production, Vicksburg Chemical Company has been regulated under the Resource Conservation and Recovery Act (RCRA) due to its production and/or storage of two listed hazardous wastes, namely, K098, untreated process wastewater from the production of toxaphene, and K041, wastewater treatment sludge from the production of toxaphene.

In the administrative hearing at bar, Vicksburg Chemical Company wishes to disregard its present RCRA regulation and discontinue the same in the future, alleging that the process stream and the treatment sludge generated at the facility is not that intended to be regulated under RCRA, and therefore RCRA regulation is not proper. The Bureau of Pollution Control, as well as the United States Environmental Protection Agency (USEPA) strongly disagree with

Vicksburg Chemical Company's allegations, and firmly believe that the process stream and the treatment sludge generated at Vicksburg Chemcial Company are exactly the hazardous wastes which EPA intended to regulate; therefore, regulation must be maintained.

ARGUMENT

Mississippi's Hazardous Waste Regulation 261.32 clearly shows that K098, untreated process wastewater from the production of toxaphene, and K041, wastewater treatment sludge from the production of toxaphene, are listed hazardous wastes, and therefore subject to regulation under RCRA. In fact, Vicksburg Chemical Company's own expert witness, in his oral testimony before the Commission, stated that, even though he felt that USEPA had drafted the listing regulations too hastily and that mistakes had been made, he agreed that Vicksburg Chemical Company was a regulated facility under the listings as they presently exist. Additional proof that USEPA intended that this facility and its process stream and sludge be regulated is easily found in the Listings Background Document prepared by USEPA. Page 5 of the Listings Background Document specifically includes wastes generated by the acid recovery system as being untreated process wastewater from the production of toxaphene. Under effluent guidelines and standard regulations, a process wastewater is any water which, during manufacturing or processing comes in direct contact with the results from the production or use of any material, intermediate product, finish product, or product. Surely this waste stream meets these requirements. (See affidavit of Matt Straus, Page 2, 3). Further, under RCRA, neutralization and

settling of waste streams are considered treatment. In the report "Wastewater Treatment Technology Documentation For Toxaphene Manufacture", it is indicated that the effluent from the toxaphene process at Vicksburg Chemical Company "is discharged to a final neutralization and settling pond on site." (See affidavit of Matt Straus, Page 4). Vicksburg Chemical Company has never disputed that their waste streams from the toxaphene facility were treated in the impoundment. Therefore, it is clear that the process waste stream and treatment sludge is indeed intended to be regulated under Part 261.32 of the Mississippi Hazardous Waste Regulations.

In the earlier hearing before the Commission on May 27, 1987, Vicksburg Chemical Company went to great lengths to display diagrams and flow charts of how the toxaphene production facility operated, arguing that the acid recovery system was separate and distinct from the toxaphene production. However, the listing language for K098 untreated process wastewater from the production of toxaphene and K041, wastewater treatment sludge from the production of toxaphene, does not limit itself to any particular stage in the production process; therefore, any wastewater generated by any of the steps in the toxaphene production process are covered by the listings. (See Affidavit of Matt Straus, Page 2).

During the course of the above referenced hearing, Vicksburg Chemical Company has argued that, if subjected to RCRA regulation, it would have to "close" the impoundment at Vicksburg Chemical Company and its beneficial use as a water shed, i. e. a "catch basin" for run off of leaks and spills of containiminants, would

be lost. Officials of the Mississippi Bureau Pollution Control and EPA Region IV believe that options are available to Vicksburg Chemical Company which would meet the requirements of closure for purposes of regulation without necessitating actual closure of the impoundment. The Mississippi Bureau of Pollution Control is willing to assist Vicksburg Chemical Company in this endeavor. (See Affidavit of Sam Mabry, Page 3; Affidavit of Jim Scarbrough, Page 2).

Should the Commission allow Vicksburg Chemical Company to avoid RCRA regulation, Vicksburg Chemical Company's obligation to provide financial assurance (insurance) against possible spills or contamination of groundwater for the impoundment will be forfeited. This State would be adversely affected if it is saddled with the cost of an enviromental clean-up assuming Vicksburg Chemical Company's inability or unwillingness to do so.

Further, Vicksburg Chemical Company has argued that any toxaphene contamination from leaks or spills which entered the impoundment were de minimis losses (minor leaks or spills), and therefore exempt from regulation. In reviewing the de minimis loss provision of the Mississippi Hazardous Waste Regulations, cited at Part 261.33 (a)(2)(IV)(D), it is apparent that de minimis losses (i. e. spills and leaks) of commercial chemical products that are discharged to wastewaters <u>are not automatically considered hazardous wastes unless the wastewater is a listed hazardous waste</u>. Because the wastewater referred to within this memorandum is a <u>listed hazardous waste</u>, namely, K098, the de minimis loss provision does not apply.

Vicksburg Chemical Company's objective throughout the course of this hearing has been to seek and obtain from this Commission a "de-listing" of the process waste water and treatment sludge at the Facility, thereby negating the necessity for RCRA regulation. After a review of the Mississippi Hazardous Waste Regulations, it is clear that Vicksburg Chemical Company has improperly brought this matter before the Commission. Part 260.22 of the Mississippi Hazardous Waste Regulations states that "any person seeking to exclude a waste at a particular generating facility from the hazardous waste listings in sub-part D of Part 261 may petition for a regulatory amendment..." The petition is to be filed with the Enviromental Protection Agency Administrator or his Designee, and must demonstrate to the Administrator's satisfaction that the waste produced by a particular generating facility does not meet any of the criteria under which the waste was listed as hazardous. Prior to "de-listing" the waste, the Administrator or his Designee will make an analysis of not only the listed wastes in a particular impoundment but other constituents in the empoundment as well. USEPA is understandably very careful in considering de-listing petitions due to the serious nature of the request and the adverse consequences which could rise if a particular facility is erroneously de-listed and contamination subsequently occurs. No state administrative body is given the authority to de-list; in fact, even officials at EPA Region 4 cannot hear a de-listing petition. Only the Administrator or his Disignee at USEPA Headquarters in Washington, D.C. may presently hear these petitions.

CONCLUSION

Vicksburg Chemical Company is and should continue to be regulated under RCRA as result of its generation of toxaphene process wastewater and treatment sludge during a period of time from November, 1982 until the facility ceased its toxaphene production process in 1982. Toxaphene contamination is still present in the impoundment; therefore potential for groundwater contamination or a "spill over" of the impoundment and subsequent run-off of a hazardous waste is a very real threat.

In order to better protect the health and welfare of the citizenry of this State, and by reason of the facts set forth hereinabove, the Mississippi Bureau of Pollution Control respectfully requests that Vicksburg Chemical Company's petition be denied.

Respectfully submitted,

J. ARTHUR PRESTAGE
SPECIAL ASSISTANT ATTORNEY GENERAL
ATTORNEY FOR:
MISSISSIPPI BUREAU OF POLLUTION CONTROL

OFFICE OF THE ATTORNEY GENERAL
POST OFFICE BOX 220
JACKSON, MISSISSIPPI 39205-0220
TELEPHONE: (601) 359-3680

CERTIFICATE OF SERVICE

I, J. Arthur Prestage, Attorney for Mississippi's Attorney General, do hereby certify that on this day I caused to be personally served a true and correct copy of Memorandum With Supporting Affidavits to William L. Smith, Esquire at Brunini, Grantham, Grower and Hughes, Post Office Drawer 119, Jackson, Mississippi 39205.

This the 23 day of June, 1987.

J. ARTHUR PRESTAGE
SPECIAL ASSISTANT
ATTORNEY GENERAL

AFFIDAVIT OF SAM MABRY
WITNESS FOR MISSISSIPPI
BUREAU OF POLLUTION CONTROL

STATE OF MISSISSIPPI

COUNTY OF HINDS

Affiant, after having been duly sworn, did state that the following facts are true and correct:

My name is Sam Mabry. I am Chief of the Hazardous Waste Division of the Mississippi Bureau of Pollution Control, having served in that capacity since September, 1986. I have a B.S. in Engineering from Mississippi State University.

Part of the purpose and function of my Division is to regulate sources which produce, generate or store hazardous waste substances. Vicksburg Chemical Company has been regulated under RCRA since 1981.

It is my professional opinion that Vicksburg Chemical Company should remain to be regulated since, from November, 1980 until it ceased operation in 1982, it generated a listed hazardous waste substance, K098 (untreated process wastewater from the production of toxaphene) and further, as the wastewater entered the surface impoundment, another listed hazardous waste substance was formed, i.e. K041 process treatment sludge from the production of toxaphene).

Mississippi Hazardous Waste Regulation 261.32 clearly lists the above reference substances as being those intended to be regulated. See Exhibit "A" attached. The State of Mississippi has adopted EPA's regulations as its own regulations. Mississippi, because its regulations are equivalent to EPA, enjoys "primacy", i.e. the privilege of administering its own environmental enforcement programs. Any attempt to lessen or ignore the requirements set by the federal regulations could cause Mississippi to lose

its "primacy" status, thereby causing our hazardous waste enforcement programs to be administered by the federal government. Thus, to "de-list" a hazardous waste substance in this State which is "listed" under the federal regulations could cause adverse consequences for this State.

The Mississippi Bureau of Pollution Control has conducted a sampling of the toxaphene levels in the surface impoundment at Vicksburg Chemical Company and found it to be at 2320 parts per million. Even though the concentration levels of toxaphene are relevant from an environmental standpoint, they bear little relevance with regard to the issue of regulation. The fact remains that two known listed hazardous waste were generated, produced or stored at Vicksburg Chemical Company, and evidence of the same is still present in the surface impoundment some five years after the Facility stopped producing toxaphene. Toxaphene is extremely toxic and is a known cancer-causing substance. The Listings Background Document clearly states the dangerous propensities of toxaphene; thus, the reason for regulation. It is the Bureau's position that additional groundwater monitoring is needed at the facility in order to assess the environmental situation.

It is necessary that this impoundment remain regulated to adequately protect the environment and the citizens of this State. If the wastewater and sludge at this facility is "de-listed" by the Commission, Vicksburg Chemical Company will be free of its obligation to provide financial assurance (insurance) for the impoundment. Thus, if Vicksburg Chemical Company ceases operations in the future and an environmental

problem subsequently arises, or if a clean-up procedure is needed that Vicksburg Chemical Company cannot afford, the State of Mississippi will be saddled with the costs.

It is my opinion that it would be improper for the Commission to, in effect, "de-list" the toxaphene wastewater generated at Vicksburg Chemical Company and the wastewater treatment sludge because this would be a violation of the proper de-listing procedure set forth in Part 260.22 of the Mississippi Hazardous Waste Regulations. See Exhibit "B" attached.

It is further my opinion that there are options available to Vicksburg Chemical Company to "close" the impoundment under RCRA without having to effect an "actual closure." Therefore, the beneficial aspects of the impoundment, i.e., its use as a watershed to prevent run-off of contaminates, could be maintained. The Bureau of Pollution Control is willing to assist Vicksburg Chemical Company in its study of various options.

Sam Maloy
AFFIANT

Sworn to and subscribed before me, this the 23rd day of June, 1987.

Mary L Bredenkamp
NOTARY PUBLIC

MY COMMISSION EXPIRES:
My Commission Expires Dec. 7, 1988

Industry and EPA hazardous waste No.	Hazardous waste	Hazard code
Inorganic chemicals:		
K071	Brine purification muds from the mercury cell process in chlorine production where separately prepurified brine is not used.	(T)
K073	Chlorinated hydrocarbon waste from the purification step of the diaphragm cell process using graphite anodes in chlorine production.	(T)
K106	Wastewater treatment sludge from the mercury cell process in chlorine production	(T)
Pesticides:		
K031	By-product salts generated in the production of MSMA and cacodylic acid	(T)
K032	Wastewater treatment sludge from the production of chlordane	(T)
K033	Wastewater and scrub water from the chlorination of cyclopentadiene in the production of chlordane	(T)
K034	Filter solids from the filtration of hexachlorocyclopentadiene in the production of chlordane	(T)
K097	Vacuum stripper discharge from the chlordane chlorinator in the production of chlordane	(T)
K035	Wastewater treatment sludges generated in the production of creosote	(T)
K036	Still bottoms from toluene reclamation distillation in the production of disulfoton	(T)
K037	Wastewater treatment sludges from the production of disulfoton	(T)
K038	Wastewater from the washing and stripping of phorate production	(T)
K039	Filter cake from the filtration of diethylphosphorodithioic acid in the production of phorate.	(T)
K040	Wastewater treatment sludge from the production of phorate	(T)
K041	Wastewater treatment sludge from the production of toxaphene	(T)
K098	Untreated process wastewater from the production of toxaphene	(T)
K042	Heavy ends or distillation residues from the distillation of tetrachlorobenzene in the production of 2,4,5-T.	(T)
K043	2,6-Dichlorophenol waste from the production of 2,4-D	(T)
K099	Untreated wastewater from the production of 2,4-D	(T)

[K123 through 126 added by 51 FR 37728, October 24, 1986]

K123	Process wastewater (including supernates, filtrates, and washwaters) from the production of ethylenebisdithiocarbamic acid and its salt.	(T)
K124	Reactor vent scrubber water from the production of ethylenebisdithiocarbamic acid and its salts	(C, T)
K125	Filtration, evaporation, and centrifugation solids from the production of ethylenebisdithiocarbamic acid and its salts.	(T)
K126	Baghouse dust and floor sweepings in milling and packaging operations from the production or formulation of ethylenebisdithiocarbamic acid and its salts.	(T)
Explosives:		
K044	Wastewater treatment sludges from the manufacturing and processing of explosives	(R)
K045	Spent carbon from the treatment of wastewater containing explosives	(R)
K046	Wastewater treatment sludges from the manufacturing formulation and loading of lead-based initiating compounds.	(T)
K047	Pink/red water from TNT operations	(R)
Petroleum refining:		
K048	Dissolved air flotation (DAF) float from the petroleum refining industry	(T)
K049	Slop oil emulsion solids from the petroleum refining industry	(T)
K050	Heat exchanger bundle cleaning sludge from the petroleum refining industry	(T)
K051	API separator sludge from the petroleum refining industry	(T)
K052	Tank bottoms (leaded) from the petroleum refining industry	(T)
Iron and steel:		
K061	Emission control dust/sludge from the primary production of steel in electric furnaces.	(T)
K062	Spent pickle liquor generated by steel finishing operations of facilities within the iron or steel industry (SIC Codes 331 and 332).	(C, T)
Secondary lead:		
K069	Emission control dust/sludge from secondary lead smelting	(T)
K100	Waste leaching solution from acid leaching of emission control dust/sludge from secondary lead smelting.	(T)
Veterinary pharmaceuticals:		
K084	Wastewater treatment sludges generated during the production of veterinary pharmaceuticals from arsenic or organo-arsenic compounds.	(T)
K101	Distillation tar residues from the distillation of aniline-based compounds in the production of veterinary pharmaceuticals from arsenic or organo-arsenic compounds.	(T)
K102	Residue from the use of activated carbon for decolorization in the production of veterinary pharmaceuticals from arsenic or organo-arsenic compounds.	(T)
Ink formulation: K086	Solvent washes and sludges, caustic washes and sludges, or water washes and sludges from cleaning tubs and equipment used in the formulation of ink from pigments, driers, soaps, and stabilizers containing chromium and lead.	(T)
Coking:		
K060	Ammonia still lime sludge from coking operations	(T)
K087	Decanter tank tar sludge from coking operations	(T)

[261.32 amended by 45 FR 47833, July 16, 1980; 45 FR 72039, October 30, 1980; revised by 45 FR 74980, November 12, 1980; 46 FR 4617, January 16, 1981; 46 FR 27476, May 20, 1981; 50 FR 42942, October 23, 1985; 51 FR 5330, February 13, 1986; 51 FR 19322, May 28, 1986; corrected by 51 FR 33612, September 22, 1986; amended by 51 FR 37728, October 24, 1986]

EXHIBIT "A"

[Sec. 261.32]

§261.33 Discarded commercial chemical products, off-specification species, container residues, and spill residues thereof.

[261.33 revised by 45 FR 78541, November 25, 1980]

The following materials or items are hazardous wastes if and when they are discarded or intended to be discarded, when they are mixed with waste oil or used oil or other material and applied to the land for dust suppression or road treatment, or when, in lieu of their original intended use, they are produced for use as (or as a component of) a fuel, distributed for use as a fuel, or burned as a fuel.

[261.33 introductory text amended by 49 FR 37070, September 21, 1984; 50 FR 661, January 4, 1985; 50 FR 28742, July 15, 1985]

(a) Any commercial chemical product, or manufacturing chemical intermediate having the generic name listed in paragraph (e) or (f) of this section.

(b) Any off-specification commercial chemical product or manufacturing chemical intermediate which, if it met specifications, would have the generic name listed in paragraph (e) or (f) of this section.

(c) Any container or inner liner removed from a container that has been used to hold any commercial chemical product or manufacturing chemical intermediate having the generic names listed in paragraph (e) of this section, or any container or inner liner removed from a container that has been used to hold any off-specification chemical product and manufacturing chemical intermediate which, if it met specifications, would have the generic name listed in paragraph (e) of this section, unless:

(1) The container or inner liner has been triple rinsed using a solvent capable of removing the commercial chemical product or manufacturing chemical intermediate; or

(2) The container or inner liner has been cleansed by another method that has been shown in the scientific literature, or by tests conducted by the generator, to achieve equivalent removal; or

(3) In the case of a container, the inner liner that prevented contact of the commercial chemical product or manufacturing chemical intermediate with the inner liner, has been removed.

[261.33(c) revised by 45 FR 78541, November 25, 1980; 46 FR 27476, May 20, 1981]

(d) Any residue or contaminated soil, water or other debris resulting from the cleanup of a spill into or on any land or water of any commercial chemical product or manufacturing chemical intermediate having the generic name listed in paragraph (e) or (f) of this section, or any residue or contaminated soil, water or other debris resulting from the cleanup of a spill, into or on any land or water, of any off-specification chemical product and manufacturing chemical intermediate which, if it met specifications, would have the generic name listed in paragraph (e) or (f) of this section.

[*Comment:* The phrase "commercial chemical product or manufacturing chemical intermediate having the generic name listed in . . ." refers to a chemical substance

porations by reference were approved by the Director of the Federal Register. These materials are incorporated as they exist on the date of approval and a notice of any change in these materials will be published in the **Federal Register.**

Subpart C—Rulemaking Petitions

[Interim Final]

§ 260.20 General.

(a) Any person may petition the Administrator to modify or revoke any provision in Parts 260 through 265 and 268 of this Chapter. This section sets forth general requirements which apply to all such petitions. Section 260.21 sets forth additional requirements for petitions to add a testing or analytical method to Parts 261, 264 or 265. Section 260.22 sets forth additional requirements for petitions to exclude a waste at a particular facility from § 261.3 of this Chapter or the lists of hazardous wastes in Subpart D of Part 261.
[260.20(a) amended by 51 FR 40636, November 7, 1986]

(b) Each petition must be submitted to the Administrator by certified mail and must include:

(1) The petitioner's name and address;
(2) A statement of the petitioner's interest in the proposed action;
(3) A description of the proposed action, including (where appropriate) suggested regulatory language; and
(4) A statement of the need and justification for the proposed action, including any supporting tests, studies, or other information.

(c) The Administrator will make a tentative decision to grant or deny a petition and will publish notice of such tentative decision, either in the form of an advanced notice of proposed rulemaking, a proposed rule, or a tentative determination to deny the petition, in the **Federal Register** for written public comment.

(d) Upon the written request of any interested person, the Administrator may, at his discretion, hold an informal public hearing to consider oral comments on the tentative decision. A person requesting a hearing must state the issues to be raised and explain why written comments would not suffice to communicate the person's views. The Administrator may in any case decide on his own motion to hold an informal public hearing.

(e) After evaluating all public comments the Administrator will make a final decision by publishing in the **Federal Register** a regulatory amendment or a denial of the petition.

§ 260.21 Petitions for equivalent testing or analytical methods.

[260.21 amended by 49 FR 47391, December 4, 1984]

(a) Any person seeking to add a testing or analytical method to Parts 261, 264, or 265 of this Chapter may petition for a regulatory amendment under this section and § 260.20. To be successful, the person must demonstrate to the satisfaction of the Administrator that the proposed method is equal to or superior to the corresponding method prescribed in Parts 261, 264, or 265 of this Chapter, in terms of its sensitivity, accuracy, and precision (i.e., reproducibility).

(b) Each petition must include, in addition to the information required by § 260.20(b):

(1) A full description of the proposed method, including all procedural steps and equipment used in the method;

(2) A description of the types of wastes or waste matrices for which the proposed method may be used;

(3) Comparative results obtained from using the proposed method with those obtained from using the relevant or corresponding methods prescribed in Parts 261, 264, or 265 of this Chapter;

(4) An assessment of any factors which may interfere with, or limit the use of, the proposed method; and

(5) A description of the quality control procedures necessary to ensure the sensitivity, accuracy and precision of the proposed method.

(c) After receiving a petition for an equivalent method, the Administrator may request any additional information on the proposed method which he may reasonably require to evaluate the method.

(d) If the Administrator amends the regulations to permit use of a new testing method, the method will be incorporated in "Test Methods for the Evaluation of Solid Waste: Physical/Chemical Methods," SW-846, U.S. Environmental Protection Agency, Office of Solid Waste, Washington, D.C. 20460.

§ 260.22 Petition to amend Part 261 to exclude a waste produced at a particular facility.

(a) Any person seeking to exclude a waste at a particular generating facility from the lists in Subpart D of Part 261 may petition for a regulatory amendment under this section and § 260.20. To be successful:

(1) The petitioner must demonstrate to the satisfaction of the Administrator that the waste produced by a particular generating facility does not meet any of the criteria under which the waste was listed as a hazardous or an acutely hazardous waste; and

(2) Based on a complete application, the Administrator must determine, where he has a reasonable basis to believe that factors (including additional constituents) other than those for which the waste was listed could cause the waste to be a hazardous waste, that such factors do not warrant retaining the waste as a hazardous waste. A waste which is so excluded, however, still may be a hazardous waste by operation of Subpart C of Part 261.

[260.22(a) revised by 50 FR 28742, July 15, 1985]

EXHIBIT "B"

[Sec. 260.22(a)(2)]

the release of any hazardous waste or any constituent thereof into the environment during treatment. An example is a pipe in which waste acid is neutralized.

"Transfer facility" means any transportation related facility including loading docks, parking areas, storage areas and other similar areas where shipments of hazardous waste are held during the normal course of transportation.

"Transport vehicle" means a motor vehicle or rail car used for the transportation of cargo by any mode. Each cargo-carrying body (trailer, railroad freight car, etc.) is a separate transport vehicle.

"Transportation" means the movement of hazardous waste by air, rail, highway, or water.

"Transporter" means a person engaged in the offsite transportation of hazardous waste by air, rail, highway, or water.

"Treatment" means any method, technique, or process, including neutralization, designed to change the physical, chemical, or biological character or composition of any hazardous waste so as to neutralize such waste, or so as to recover energy or material resources from the waste, or so as to render such waste non-hazardous, or less hazardous; safer to transport, store, or dispose of; or amenable for recovery, amenable for storage, or reduced in volume.

"Treatment zone" means a soil area of the unsaturated zone of a land treatment unit within which hazardous constituents are degraded, transformed, or immobilized.

"Underground injection" means the subsurface emplacement of fluids through a bored, drilled or driven well; or through a dug well, where the depth of the dug well is greater than the largest surface dimension. (See also "injection well".)

"Underground tank" means a device meeting the definition of "tank" in § 260.10 whose entire surface area is totally below the surface of and covered by the ground.

[Added by 51 FR 25470, July 14, 1986]

"Unfit-for use tank system" means a tank system that has been determined through an integrity assessment or other inspection to be no longer capable of storing or treating hazardous waste without posing a threat of release of hazardous waste to the environment.

[Added by 51 FR 25470, July 14, 1986]

"Unsaturated zone" or "zone of aeration" means the zone between the land surface and the water table.

"United States" means the 50 States, the District of Columbia, the Commonwealth of Puerto Rico, the U.S. Virgin Islands, Guam, American Samoa, and the Commonwealth of the Northern Mariana Islands.

"Uppermost aquifer" means the geologic formation nearest the natural ground surface that is an aquifer, as well as lower aquifers that are hydraulically interconnected with this aquifer within the facility's property boundary.

"Vessel" includes every description of watercraft, used or capable of being used as a means of transportation on the water.

"Wastewater treatment unit" means a device which:

(1) Is part of a wastewater treatment facility which is subject to regulation under either Section 402 or Section 307(b) of the Clean Water Act; and

(2) Receives and treats or stores an influent wastewater which is a hazardous waste as defined in §261.3 of this chapter, or generates and accumulates a wastewater treatment sludge which is a hazardous waste as defined in §261.3 of this chapter, or treats or stores a wastewater treatment sludge which is a hazardous waste as defined in §261.3 of this chapter; and

(3) Meets the definition of tank in 260.10 of this chapter.

"Water [bulk shipment]" means the bulk transportation of hazardous waste which is loaded or carried on board a vessel without containers or labels.

"Well" means any shaft or pit dug or bored into the earth, generally of a cylindrical form, and often walled with bricks or tubing to prevent the earth from caving in.

[260.10(a) was amended by 45 FR 86968, December 31, 1980, to add the following definition:]

"Well injection": [See "underground injection".]

"Zone of engineering control" means an area under the control of the owner/operator that, upon detection of a hazardous waste release, can be readily cleaned up prior to the release of hazardous waste or hazardous constituents to ground water or surface water.

[Added by 51 FR 25470, July 14, 1986]

§ 260.11 References.

(a) When used in Parts 260 through 265 of this chapter, the following publications are incorporated by reference:

"ASTM Standard Test Methods for Flash Point of Liquids by Setaflash Closed Tester," ASTM Standard D-3278-78, available from American Society for Testing and Materials, 1916 Race Street, Philadelphia, Pa. 19103.

"ASTM Standard Test Methods for Flash Point by Pensky-Martens Closed Tester," ASTM Standard D-93-79 or D-93-80. D-93-80 is available from American Society for Testing and Materials, 1916 Race Street, Philadelphia, Pa. 19103.

"Flammable and Combustible Liquids Code" (1977 or 1981), available from the National Fire Protection Association, 470 Atlantic Avenue, Boston, Massachusetts 02210.

"Test Methods for Evaluating Solid Waste, Physical/Chemical Methods", EPA Publication SW-846 (Second Edition, 1982 as amended by Update I (April, 1984), and Update II (April, 1985)). The second edition of SW-846 and Updates I and II are available from the Superintendent of Documents, U.S. Government Printing Office, Washington, D.C. 20401, (202) 783-3238, on a subscription basis.

[260.11(a) amended by 47 FR 41563, September 21, 1982; revised by 49 FR 47391, December 4, 1984; 50 FR 18374, April 30, 1985]

(b) The references listed in paragraph (a) of this section are also available for inspection at the Office of the Federal Register, 1100 L Street, NW, Washington, D.C. 20408. These incor-

(b) The procedures in this section and § 260.20 may also be used to petition the Administrator for a regulatory amendment to exclude from § 261.3(a)(2)(ii) or (c), a waste which is described in those sections and is either a waste listed in Subpart D, contains a waste listed in Subpart D, or is derived from a waste listed in Subpart D. This exclusion may only be issued for a particular generating, storage, treatment, or disposal facility. The petitioner must make the same demonstration as required by paragraph (a) of this section, except that where the waste is a mixture of solid waste and one or more listed hazardous wastes or is derived from one or more hazardous wastes, his demonstration may be made with respect to each constituent listed waste or the waste mixture as a whole. A waste which is so excluded may still be a hazardous waste by operation of Subpart C of Part 261.

[260.22(c) — (e) revised by 50 FR 28742, July 15, 1985]

(c) If the waste is listed with codes "I", "C", "R", or "E", in Subpart D,

(1) The petitioner must show that the waste does not exhibit the relevant characteristic for which the waste was listed as defined in § 261.21, § 261.22, § 261.23, or § 261.24 using any applicable methods prescribed therein. The petitioner also must show that the waste does not exhibit any of the other characteristics defined in § 261.21, § 261.22, § 261.23, or § 261.24 using any applicable methods prescribed therein;

(2) Based on a complete application, the Administrator must determine, where he has a reasonable basis to believe that factors (including additional constituents) other than those for which the waste was listed could cause the waste to be hazardous waste, that such factors do not warrant retaining the waste as a hazardous waste. A waste which is so excluded, however, still may be a hazardous waste by operation of Subpart C of Part 261.

(d) If the waste is listed with code "T" in Subpart D,

(1) The petitioner must demonstrate that the waste:

(i) Does not contain the constituent or constituents (as defined in Appendix VII of Part 261) that caused the Administrator to list the waste, using the appropriate test methods prescribed in Appendix III; or

(ii) Although containing one or more of the hazrdous constituents (as defined in Appendix VII of Part 261) that caused the Administrator to list the waste, does not meet the criterion of § 261.11(a)(3) when considering the factors used by the Administrator in § 261.11(a)(3) (i) through (xi) under which the waste was listed as hazardous; and

(2) Based on a complete application, the Administrator must determine, where he has a reasonable basis to believe that factors (including additional constituents) other than those for which the waste was listed could cause the waste to be a hazardous waste, that such factors do not warrant retaining the waste as a hazardous waste; and

(3) The petitioner must demonstrate that the waste does not exhibit any of the characteristics defined in § 261.21, § 261.22, § 261.23, and § 261.24 using any applicable methods prescribed therein;

(4) A waste which is so excluded, however, still may be a hazardous waste by operation of Subpart C of Part 261.

(e) If the waste is listed with the code "H" in Subpart D,

(1) The petitioner must demonstrate that the waste does not meet the criterion of § 261.11(a)(2); and

(2) Based on a complete application, the Administrator must determine, where he has a reasonable basis to believe that additional factors (including additional constituents) other than those for which the waste was listed could cause the waste to be a hazardous waste, that such factors do not warrant retaining the waste as a hazardous waste; and

(3) The petitioner must demonstrate that the waste does not exhibit any of the characteristics defined in § 261.21, § 261.22, § 261.23, and § 261.24 using any applicable methods prescribed therein;

(4) A waste which is so excluded, however, still may be a hazardous waste by operation of Subpart C of Part 261.

(f) [Reserved for listing radioactive wastes.]

(g) [Reserved for listed infectious wastes.]

(h) Demonstration samples must consist of enough representative samples, but in no case less than four samples, taken over a period of time sufficient to represent the variability or the uniformity of the waste.

(i) Each petition must include, in addition to the information required by § 260.20(b):

(1) The name and address of the laboratory facility performing the sampling or tests of the waste;

(2) The names and qualifications of the persons sampling and testing the waste;

(3) The dates of sampling and testing;

(4) The location of the generating facility;

(5) A description of the manufacturing processes or other operations and feed materials producing the waste and an assessment of whether such processes, operations, or feed materials can or might produce a waste that is not covered by the demonstration;

(6) A description of the waste and an estimate of the average and maximum monthly and annual quantities of waste covered by the demonstration;

(7) Pertinent data on and discussion of the factors delineated in the respective criterion for listing a hazardous waste, where the demonstration is based on the factors in § 261.11(a)(3);

(8) A description of the methodologies and equipment used to obtain the representative samples;

(9) A description of the sample handling and preparation techniques, including techniques used for extraction, containerization and preservation of the samples;

(10) A description of the tests performed (including results);

(11) The names and model numbers of the instruments used in performing the tests; and

(12) The following statement signed by the generator of the waste or his authorized representative:

I certify under penalty of law that I have personally examined and am familiar with the information submitted in this *demonstration and all attached documents*, and that, based on my inquiry of those individuals immediately responsible for obtaining the information, I believe that the submitted information is true, accurate, and complete. I am aware that there are significant penalties for submitting false information, including the possibility of fine and imprisonment.

(j) After receiving a petition for an exclusion, the Administrator may request any additional information which he may reasonably require to evaluate the petition.

(k) An exclusion will only apply to the waste generated at the individual facility covered by the demonstration and will not apply to waste from any other facility.

(l) The Administrator may exclude only part of the waste for which the demonstration is submitted where he has reason to believe that variability of the waste justifies a partial exclusion.

(m) [Removed]

[260.22 (m) removed by 50 FR 28742, July 15, 1985]

§ 260.30 Variances from classification as a solid waste.

[260.30 added by 50 FR 661, January 4, 1985]

In accordance with the standards and criteria in § 260.31 and the procedures in § 260.33, the Regional Administrator may determine on a case-by-case basis that the following recycled materials are not solid wastes:

(a) Materials that are accumulated speculatively without sufficient amounts being recycled (as defined in § 261.1(c)(8) of this chapter);

[260.30(a) amended by 50 FR 14219, April 11, 1985]

(b) Materials that are reclaimed and then reused within the original primary production process in which they were generated;

(c) Materials that have been reclaimed but must be reclaimed further before the materials are completely recovered.

§ 260.31 Standards and criteria for variances from classification as a solid waste.

[260.31 added by 50 FR 661, January 4, 1985]

(a) The Regional Administrator may grant requests for a variance from classifying as a solid waste those materials that are accumulated speculatively without sufficient amounts being recycled if the applicant demonstrates that sufficient amounts of the material will be recycled or transferred for recycling in the following year. If a variance is granted, it is valid only for the following year, but can be renewed, on an annual basis, by filing a new application. The Regional Administrator's decision will be based on the following standards and criteria:

(1) The manner in which the material is expected to be recycled, when the material is expected to be recycled, and whether this expected disposition is likely to occur (for example, because of past practice, market factors, the nature of the material, or contractual arrangements for recycling);

(2) The reason that the applicant has accumulated the material for one or more years without recycling 75 percent of the volume accumulated at the beginning of the year;

(3) The quantity of material already accumulated and the quantity expected to be generated and accumulated before the material is recycled;

(4) The extent to which the material is handled to minimize loss;

(5) Other relevant factors.

(b) The Regional Administrator may grant requests for a variance from classifying as a solid waste those materials that are reclaimed and then reused as feedstock within the original primary production process in which the materials were generated if the reclamation operation is an essential part of the production process. This determination will be based on the following criteria:

(1) How economically viable the production process would be if it were to use virgin materials, rather than reclaimed materials;

(2) The prevalence of the practice on an industry-wide basis;

(3) The extent to which the material is handled before reclamation to minimize loss;

(4) The time periods between generating the material and its reclamation, and between reclamation and return to the original primary production process;

(5) The location of the reclamation operation in relation to the production process;

(6) Whether the reclaimed material is used for the purpose for which it was originally produced when it is returned to the original process, and whether it is returned to the process in substantially its original form;

(7) Whether the person who generates the material also reclaims it;

(8) Other relevant factors.

(c) The Regional Administrator may grant requests for a variance from classifying as a solid waste those materials that have been reclaimed but must be reclaimed further before recovery is completed if, after initial reclamation, the resulting material is commodity-like (even though it is not yet a commercial product, and has to be reclaimed further). This determination will be based on the following factors:

(1) The degree of processing the material has undergone and the degree of further processing that is required;

(2) The value of the material after it has been reclaimed;

(3) The degree to which the reclaimed material is like an analogous raw material;

AFFIDAVIT OF JAMES H. SCARBROUGH
WITNESS FOR MISSISSIPPI BUREAU OF POLLUTION CONTROL

STATE OF GEORGIA

COUNTY OF Fulton

Affiant, after having first been duly sworn, did state that the following facts are true and correct:

My name is James H. Scarbrough. I am Chief of the Residuals Management Branch of USEPA Region IV in Atlanta, Georgia. I have been employed in this capacity since November 1974.

I am familiar with Vicksburg Chemical Company and have read about its operations while producing toxaphene from 1980-1982. Based on what I have read and what my staff has told me, it is my professional opinion that untreated process wastewater (K098), and wastewater treatment sludge from the production of toxaphene (K041), are present at the facility. I base my opinion upon the written regulations concerning "listings", discussions with Matt Straus at USEPA in Washington, D.C., the Listings Background Document, and inspection reports prepared by my staff.

When determining whether a particular substance is listed, I often times consult with Matt Straus. I consider him to be most knowledgeable with regard to the listing of hazardous waste substances. Additionally, I read Listings Background Documents to obtain a better understanding for the basis of the listing. The Listing Background Document explains why EPA listed a particular substance. A Listings Background Document is prepared by EPA for each listed hazardous waste substance. A particular company which produces or stores listed hazardous waste substances does

not have to be specifically mentioned in any given Listings Background Document to be regulated. Although a Listings Background Document may refer to only two companies, this does not prevent other companies which generate the listed substance from being regulated. Even companies who begin to produce and/or store those listed substances after the listings are published are regulated. It is clear from the Listings Background Document that Vicksburg Chemical Company was intended by EPA to be regulated.

I agree with Sam Mabry, Chief of the Hazardous Waste Division of the Mississippi Bureau of Pollution Control, that it may be possible for the company to use the impoundment after closure. If the impoundment is clean closed, then its use is strictly up to Vicksburg Chemical Company. If it is not clean closed, then it must be capped and a post-closure permit obtained.

The facility must be required to maintain compliance with 40 CFR 265 until closure is certified, including liability insurance.

James H Scarbrough, P.E.
AFFIANT

Sworn to and subscribed before me this the 22nd day of June 1987, 1987.

Marilyn A. Allen
NOTARY PUBLIC

MY COMMISSION EXPIRES:
Notary Public, Georgia, State at Large
My Commission Expires Apr. 23, 1988

AFFIDAVIT OF MATT STRAUS
EXPERT WITNESS FOR MISSISSIPPI BUREAU
OF POLLUTION CONTROL

STATE OF MARYLAND

COUNTY OF HOWARD

Affiant, after having first been duly sworn, did state that the following facts are true and correct:

My name is Matthew Straus. I am Chief of the Waste Characterization Branch of the Office of Solid Waste at the Environmental Protection Agency in Washington, D. C. I have been employed in this capacity for approximately one year. I previously was Chief of the Waste Identification Branch of the Office of Solid Waste for approximately two years. I was, and have been, directly involved in the "listing" of hazardous wastes for purposes of regulation under Subtitle C of the Resource Conservation and Recovery Act since their formation.

It is my professional opinion and belief that Vicksburg Chemical Company did indeed generate "untreated process wastewater from the production of toxaphene" (listed as K098) at its toxaphene facility in Vicksburg, Mississippi after November 19, 1980, the effective date of the hazardous waste regulations, until 1982, and further, that untreated process wastewater was channeled to an impoundment where it was treated, thus creating a second hazardous waste, namely, "wastewater treatment sludge from the production of toxaphene" (listed as K041).

In order to form a sound professional opinion as to whether Vicksburg Chemical Company should continue to be regulated for purposes of toxaphene, I believe it is

necessary that three questions be answered:

(1)

WHAT UNIT PROCESSES ARE PART OF THE TOXAPHENE MANUFACTURING PROCESS?

In my professional opinion, the acid recovery system was indeed part of the toxaphene manufacturing process at Vicksburg Chemical Company. In reviewing the applicable regulation cited at 40 CFR Section 261.32 of the EPA Regulations For Identifying Hazardous Wastes, the "listing" language does not limit itself to any particular step in the production process; therefore, any wastewater generated by any of the steps in the toxaphene production process are covered by the listing. Where EPA wished to limit itself, it has used listing descriptions which narrowed the scope of a listing, an example being EPA Hazardous Waste No. K097 (vacuum stripper discharge from the chlordane chlorinator in the production of chlordane). The listing at issue with this Commission, namely, K098, is not limited to "wastewater from the chlorination of camphene in toxaphene production" as Vicksburg Chemical Company would like for you to believe. In addition, Page 5 of the Listing Background Document specifically includes wastes generated by the acid recovery system as being untreated process wastewater from the production of toxaphene. (See portion of Background Listing Document attached as Exhibit "A"). Additionally, the flow diagram provided by Vicksburg Chemical Company in Attachment J to their letter dated November 10, 1986 to Sam Mabry from Fred Ahlers attached hereto, and also the flow diagram contained on Page 40 of the Report "Wastewater Treatment Technology Documentation For Toxaphene Manufacture" indicate that the acid recovery step is part of the toxaphene manufacturing process. Applicable portions of these documents are attached as Exhibits "B" and "C" respectively.

(2)

WAS A WASTEWATER GENERATED FROM THE TOXAPHENE MANUFACTURING PROCESS?

Additionally, it must be determined whether a wastewater was generated from the toxaphene manufacturing process. I firmly believe there is a wastewater stream from the production of toxaphene. Under effluent guidelines and standard regulations, a process wastewater means "any water which, during manufacturing or processing comes into direct contact with or results from the production or use of any material, intermediate product, finished product, or product." Since a wastewater stream was generated from the toxaphene manufacturing process, such as scrubber water from the acid recovery system which I previously indicated is part of the toxaphene manufacturing process, and since this waste stream contains various pollutants, as well as comes into direct contact with various materials used in the toxaphene manufacturing process, a wastewater stream was generated at Vicksburg Chemical Company. For the above reasons, it is my opinion that the listed waste K098, (untreated process wastewater from the production of toxaphene) was generated at this facility.

(3)

WERE THE ON-SITE SURFACE IMPOUNDMENTS PART OF THE WASTEWATER TREATMENT SYSTEM?

Also, it must be determined whether the on-site impoundments are used to treat the wastewater and thus generate and store EPA Hazardous Waste No. K041, (wastewater treatment sludge from the production of toxaphene). On Page 42 of the Report "Wastewater Treatment Technology Documentation For Toxaphene Manufacture", it is indicated that the effluent from the toxaphene process at the Vicksburg facility "is discharged to a final neutralization and

settling pond located on-site." See Exhibit "D". Under the definition of treatment in the RCRA hazardous waste program, both neutralization and settling are considered treatment. It is undisputed by Vicksburg Chemical Company that waste streams from the toxaphene facility were treated in the impoundment, prior to discharge into the Mississippi River. For these reasons, it is my opinion that K041 was indeed generated in the surface impoundments at Vicksburg Chemical Company. If the sludge has not been removed since its generation, the impoundment is still subject to regulation under the RCRA hazardous waste program.

Additionally, I believe that the de minimus loss provision (40 CFR 261.33(a)(2)(iv)(D)) does not apply to this case. The exemption clearly states that de minimus losses (i.e. spills and leaks) of commercial chemical products that are discharged to wastewaters (that are subject to regulation under Section 402 or 307(b) of the Clean Water Act) are not automatically considered hazardous wastes unless the wastewater is a listed hazardous waste, or the wastewater has been mixed with a listed hazardous waste, or the wastewater exhibits one or more of the hazardous waste characteristics. The purpose of this exemption was to avoid the unnecessary regulation of wastewater treatment units that only receive de minimus losses of commercial chemical products. Since EPA has specifically listed the wastewater from toxaphene production, and since we have not specifically excluded this listing from the de minimus loss rule, the de minimus rule should not and does not apply here.

Lastly, it is extremely important to know and understand that the federal hazardous waste rules, and as I have been told,

the Mississippi's hazardous waste regulations afford a remedy whereby parties aggrieved by a particular hazardous waste listing can petition USEPA in Washington, D.C. for a modification to a particular listing or a complete "de listing", i.e. cancellation of the listing. In the petition, Vicksburg Chemical Company would have to demonstrate the non-hazardous nature of the wastes if the wastes were improperly managed (such as if it were removed from the impoundment and taken to another facility). USEPA scrutinizes such requests very carefully, analyzing data not only of the listed substance in the impoundment, but other hazardous waste constituents as well prior to issuance of a ruling. Therefore, this is a remedy for Vicksburg Chemical Company if they believe this waste is non-hazardous.

Matthew A. Stein
AFFIANT

Sworn to and subscribed before me, this the 10 day of June, 1987.

NOTARY PUBLIC

MY COMMISSION EXPIRES:
VINCENT THOMAS
NOTARY PUBLIC STATE OF MARYLAND
My Commission Expires July 1, 1990

and lime to the wastewater as sorption agents for the removal of toxaphene from the wastewater.(5) The solids are allowed to settle in holding ponds and may remain there for months at a time.(13) After the basin is filled with solids it is taken off line and the sludge is allowed to dry to approximately 50% solids.(5) Analyses of the sludge performed by Hercules indicate that the sludge contains approximately one percent toxaphene by weight, or 10,000 mg toxaphene/kg of sludge.(5) Some 140 lb/day of toxaphene are generated and will be contained in this waste stream.(4,5)

The ultimate destination of the toxaphene wastewater treatment sludge generated at the Hercules plant is a state-approved landfill.(6) The landfill is known as the "009" landfill and is a privately owned site operating under Georgia permit. It is used exclusively for the disposal of the toxaphene wastewater treatment sludge generated at the Hercules Plant.(6) The "009" landfill used for disposal of the Hercules toxaphene wastewater treatment sludge has a bentonite clay liner, and has 6 monitoring wells which are monitored 4 times per year. To date, no toxaphene has been detected in the wells.(6)

At Vertac's Vicksburg plant, the toxaphene-containing process wastewater stream seems to be the bleed stream from the caustic soda scrubber for off-gas cleanup in the HCl absorption and recovery step(3). Analysis of the bleed streams indicated the presence of chloroform at 8 ng/l, carbon tetrachloride at 625 ng/l, chlorobenzene at 146 ng/l, and toxaphene at 33 ng/l(5). These effluent streams, discharged at a flow rate of about 0.63 liters/sec (10 gpm), along with residual toxaphene from

RCRA CONFIDENTIAL
[illegible]
Does Not Contain National
Security Information (E.O. 12065)

EXHIBIT "A"

TOXAPHENE SCHEMATIC

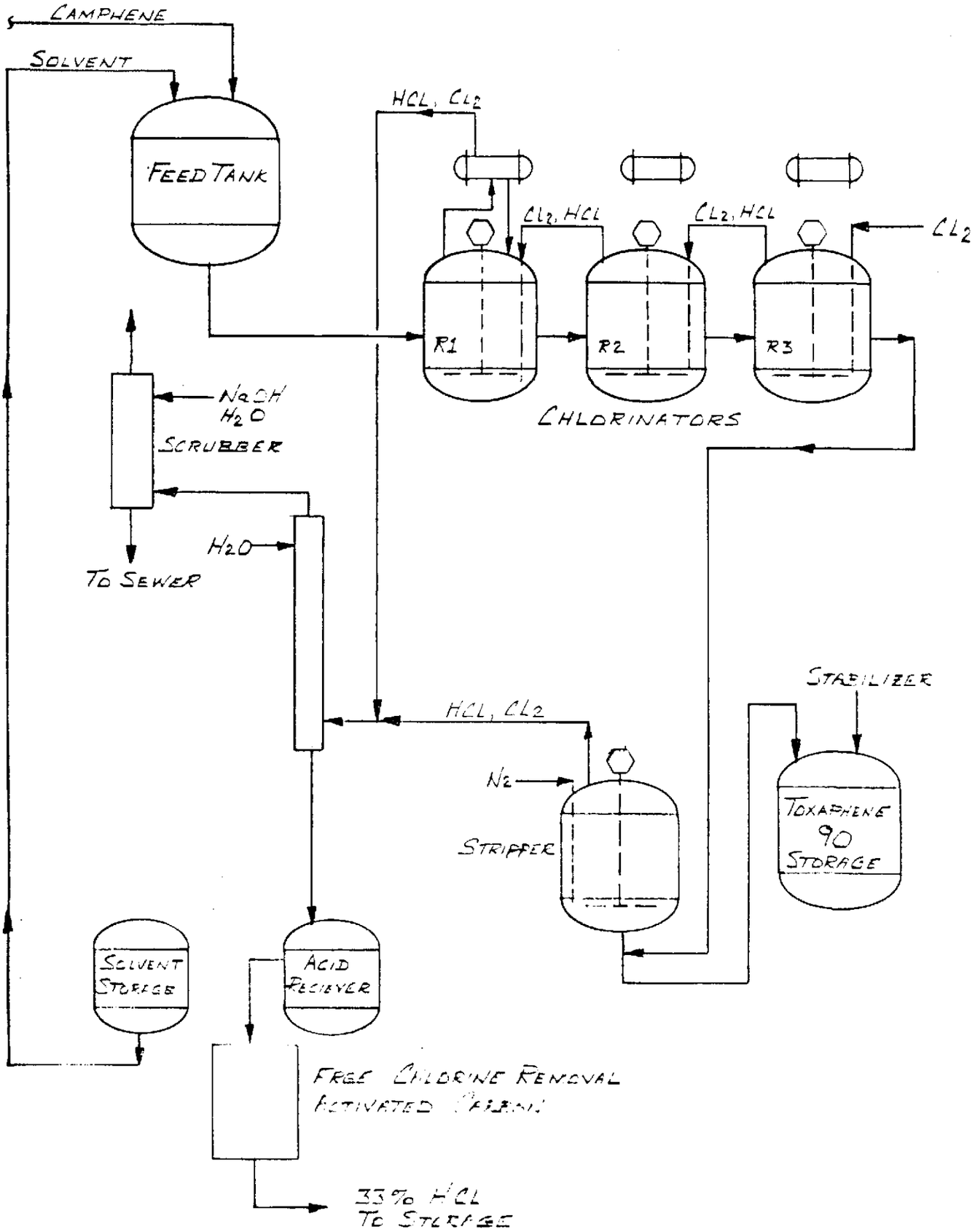

EXHIBIT "B"

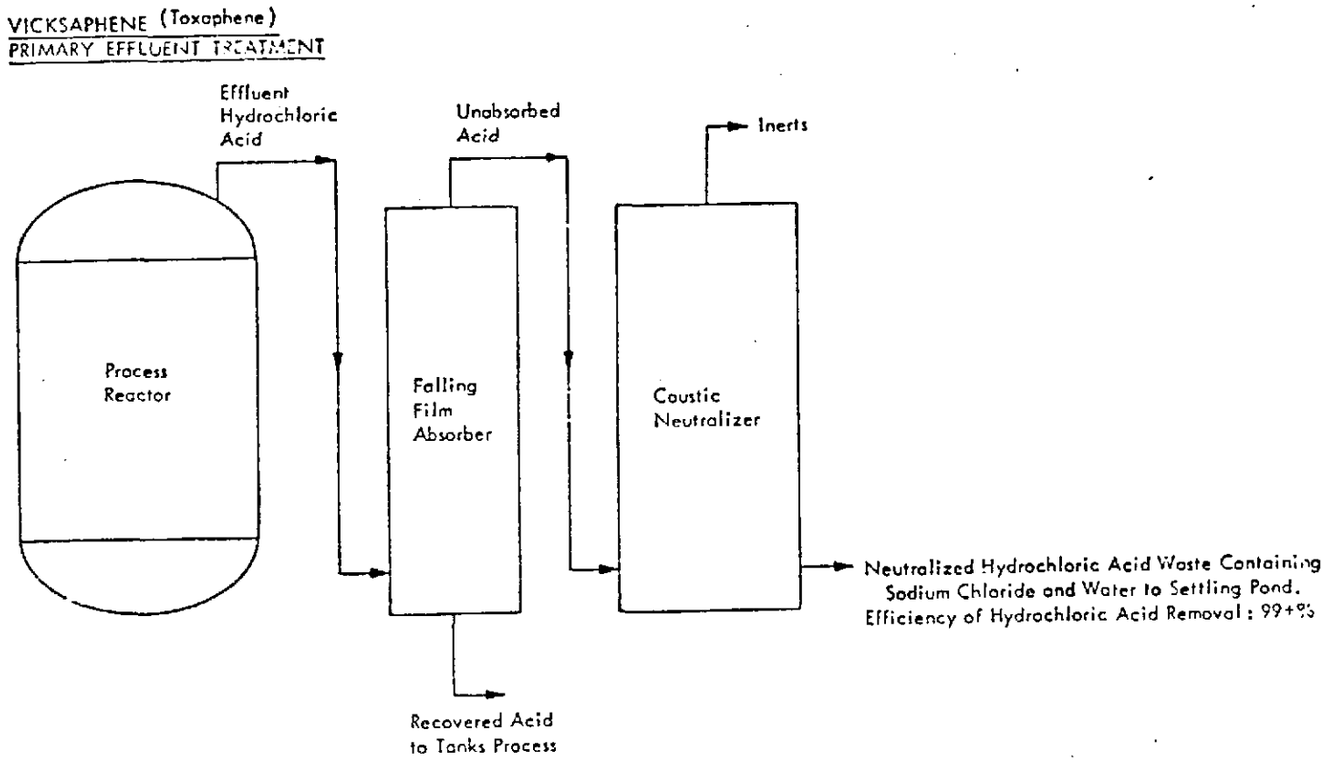

Source: Vicksburg Chemical Company, Fact Sheet, Application for National Pollutant Discharge Elimination System Permit to Discharge Wastewater to Waters of the State of Mississippi, February 25, 1975.

Figure 5. Toxaphene production schematic--Vicksburg Chemical Company, Vicksburg, Mississippi

Wastewater Treatment

The only effluent from the toxaphene process is spent caustic solution discharged from the off-gas scrubber at a rate of approximately 10 gpm (Enviro-Labs, 1975). A Vicksburg Chemical Company official has stated that independent analysis of this effluent has failed to detect the presence of toxaphene (Meiners and Mumma, 1975c). This effluent is discharged to a final neutralization and settling pond located on-site as shown in Figure 6. Waste liquor is pumped from this pond to the city treatment plant (Figure 7).

A Vicksburg Chemical Company official has pointed out that zero discharge of effluent is not considered to be feasible, since it is probably impossible to avoid the small discharge (10 gpm) of effluent from the off-gas caustic scrubber (Meiners and Mumma, 1975c).

Plant Visit

On October 14, 1975, A. F. Meiners and C. E. Mumma visited the production plant of the Vicksburg Chemical Company in Vicksburg, Mississippi. Toxaphene production was discussed with Mr. Silvan B. Lutkewitte, President, and Mr. Jerry W. McAdams, Environmental Engineer. The manufacturing process and waste treatment facilities were examined during this visit.

EXHIBIT "D"

narily found in raw materials or products for which the materials substitute (or are found in raw materials or products in smaller concentrations) and are not used or reused during the recycling process; and

(ii) The material may pose a substantial hazard to human health and the environment when recycled.

(e) *Materials that are not solid waste when recycled.* (1) Materials are not solid wastes when they can be shown to be recycled by being:

(i) Used or reused as ingredients in an industrial process to make a product, provided the materials are not being reclaimed; or

(ii) Used or reused as effective substitutes for commercial products; or

(iii) Returned to the original process from which they are generated, without first being reclaimed. The material must be returned as a substitute for raw material feedstock, and the process must use raw materials as principal feedstocks.

(2) The following materials are solid wastes, even if the recycling involves use, reuse, or return to the original process (described in paragraphs (e)(1) (i)-(iii) of this section:

(i) Materials used in a manner constituting disposal, or used to produce products that are applied to the land; or

(ii) Materials burned for energy recovery, used to produce a fuel, or contained in fuels; or

(iii) Materials accumulated speculatively; or

(iv) Materials listed in paragraph (d)(1) of this section.

(f) *Documentation of claims that materials are not solid wastes or are conditionally exempt from regulation.* Respondents in actions to enforce regulations implementing Subtitle C of RCRA who raise a claim that a certain material is not a solid waste, or is conditionally exempt from regulation, must demonstrate that there is a known market or disposition for the material, and that they meet the terms of the exclusion or exemption. In doing so, they must provide appropriate documentation (such as contracts showing that a second person uses the material as an ingredient in a production process) to demonstrate that the material is not a waste, or is exempt from regulation. In addition, owners or operators of facilities claiming that they actually are recycling materials must show that they have the necessary equipment to do so.

§ 261.3 Definition of hazardous waste.

(a) A solid waste, as defined in § 261.2, is a hazardous waste if:

(1) It is not excluded from regulation as a hazardous waste under § 261.4(b); and

(2) It meets any of the following criteria:

(i) It exhibits any of the characteristics of hazardous waste identified in Subpart C.

(ii) It is listed in Subpart D and has not been excluded from the lists in Subpart D under §§ 260.20 and 260.22 of this chapter.

(iii) It is a mixture of a solid waste and a hazardous waste that is listed in Subpart D solely because it exhibits one or more of the characteristics of hazardous waste identified in Subpart C, unless the resultant mixture no longer exhibits any characteristic of hazardous waste identified in Subpart C.

(iv) It is a mixture of solid waste and one or more hazardous wastes listed in Subpart D and has not been excluded from this paragraph under §§ 260.20 and 260.22 of this chapter; however, the following mixtures of solid wastes and hazardous wastes listed in Subpart D are not hazardous wastes (except by application of paragraph (a)(2) (i) or (ii) of this section) if the generator can demonstrate that the mixture consists of wastewater the discharge of which is subject to regulation under either Section 402 or Section 307(b) of the Clean Water Act (including wastewater at facilities which have eliminated the discharge of wastewater) and:

(A) One or more of the following spent solvents listed in § 261.31—carbon tetrachloride, tetrachloroethylene, trichoroethylene—provided that the maximum total weekly usage of these solvents (other than the amounts that can be demonstrated not to be discharged to wastewater) divided by the average weekly flow of wastewater into the headworks of the facility's wastewater treatment or pretreatment system does not exceed 1 part per million; or

(B) One or more of the following spent solvents listed in § 261.31—methylene chloride, 1,1,1-trichloroethane, chlorobenzene, o-dichlorobenzene, cresols, cresylic acid, nitrobenzene, toluene, methyl ethyl ketone, carbon disulfide, isobutanol, pyridine, spent chlorofluorocarbon solvents—provided that the maximum total weekly usage of these solvents (other than the amounts that can be demonstrated not to be discharged to wastewater) divided by the average weekly flow of wastewater into the headworks of the facility's wastewater treatment or pretreatment system does not exceed 25 parts per million; or

(C) One of the following wastes listed in § 261.32—heat exchanger bundle cleaning sludge from the petroleum refining industry (EPA Hazardous Waste No. K050); or

(D) A discarded commercial chemical product, or chemical intermediate listed in § 261.33, arising from *de minimis* losses of these materials from manufacturing operations in which these materials are used as raw materials or are produced in the manufacturing process. For purposes of this subparagraph, *"de minimis"* losses include those from normal material handling operations (e.g. spills from the unloading or transfer of materials from bins or other containers, leaks from pipes, valves or other devices used to transfer materials); minor leaks of process equipment, storage tanks or containers; leaks from well-maintained pump packings and seals; sample purgings; relief device discharges; discharges from safety showers and rinsing and cleaning of personal safety equipment; and rinsate from empty containers or from containers that are rendered empty by that rinsing; or

(E) Wastewater resulting from laboratory operations containing toxic (T) wastes listed in Subpart D, provided that the annualized average flow of laboratory wastewater does not exceed one percent of total wastewater flow into the headworks of the facility's wastewater treatment or pre-treatment system, or provided the wastes, combined annualized average concentration does not exceed one part per million in the headworks of the facility's wastewater treatment or pre-treatment facility. Toxic (T) wastes used in laboratories that are demonstrated not to be discharged to wastewater are not to be included in this calculation.

[261.3(a)(3) revised by 46 FR 56588, November 17, 1981]

(b) A solid waste which is not excluded from regulation under paragraph (a)(1) of this section becomes a hazardous waste when any of the following events occur:

(1) In the case of a waste listed in Subpart D, when the waste first meets the listing description set forth in Subpart D.

(2) In the case of a mixture of solid waste and one or more listed hazardous wastes, when a hazardous waste listed in Subpart D is first added to the solid waste.

(3) In the case of any other waste (including a waste mixture), when the waste exhibits any of the characteristics identified in Subpart C.

[261.3(c)(2) revised by 49 FR 23287, June 5, 1984; 50 FR 661, January 4, 1985; 50 FR 14219, April 11, 1985]

(c) Unless and until it meets the criteria of paragraph (d):

(1) A hazardous waste will remain a hazardous waste.

EXHIBIT "E"

BRUNINI, GRANTHAM, GROWER & HEWES
ATTORNEYS AT LAW
1400 TRUSTMARK BUILDING
JACKSON, MISSISSIPPI 39201

JOHN M. GROWER
GEORGE P. HEWES, III
NEWT P. HARRISON
RICHARD W. DORTCH
LEIGH B. ALLEN, III
JOHN R. HUTCHERSON
EDMUND L. BRUNINI, JR.
LAWRENCE E. ALLISON, JR.
CHARLES P. ADAMS, JR.
W. DAVID WATKINS
JOHN A. WELSCH, JR.
HOLMES S. ADAMS
WILLIAM L. SMITH
JEFFERSON D. STEWART
ROBERT O. DRINKWATER
CHRISTOPHER A. SHAPLEY
LESLIE H. SOUTHWICK
R. DAVID KAUFMAN
JOHN E. MILNER
R. WILSON MONTJOY, II
WALTER S. WEEMS
JAMES A. KEITH
JOSHUA J. WIENER
LOUIS G. FULLER
W. RODNEY CLEMENT, JR.
BROOKS EASON
JOHN E. WADE, JR.
J. PERRY SANSING
WILSON H. CARROLL
C. VICTOR WELSH, III
LISA E. BOURDEAUX
JAMES L. HALFORD
GRANVILLE TATE, JR.
JAMES W. YOUNG, JR.

MAILING ADDRESS:
POST OFFICE DRAWER 119
JACKSON, MISSISSIPPI 39205
TELEPHONE:
601-948-3101
EDMUND L. BRUNINI
OF COUNSEL
R. GORDON GRANTHAM
(1912-1986)

June 23, 1987

Colonel Charles Blalock
Executive Director
Mississippi Department of Natural Resources
Post Office Box 10385
Jackson, Mississippi 39209

HAND-DELIVERED

Re: Vertac Chemical

Dear Colonel Blalock:

Enclosed for filing in the Vertac matter, please find the brief of the respondent in support of its application to dismiss, a proposed order on same, and the affidavits for insertion into the record of Fred Ahlers, Herbert Johnston and Sam Mabry.

Further find enclosed a package for each of the Commissioners. These packages were sent Monday via Overnight Delivery to the Commissioners' hometown. I forward the additional packages to you in hopes that you might give them to the Commissioners upon their arrival Tuesday night or Wednesday and in case they did not receive the Monday package.

We sincerely appreciate the opportunity the Commission has given us to present our case in this proceeding. You and your staff have been most cooperative in our efforts.

Sincerely,

BRUNINI, GRANTHAM, GROWER & HEWES

William L. Smith

William L. Smith

WLS:lrw
Enclosures
cc: Art Prestage

BRUNINI, GRANTHAM, GROWER & HEWES
ATTORNEYS AT LAW
1400 TRUSTMARK BUILDING
JACKSON, MISSISSIPPI 39201

JOHN M. GROWER
GEORGE P. HEWES, III
NEWT P. HARRISON
RICHARD W. DORTCH
LEIGH B. ALLEN, III
JOHN R. HUTCHERSON
EDMUND L. BRUNINI, JR.
LAWRENCE E. ALLISON, JR.
CHARLES P. ADAMS, JR.
W. DAVID WATKINS
JOHN A. WELSCH, JR.
HOLMES S. ADAMS
WILLIAM L. SMITH
JEFFERSON D. STEWART
ROBERT D. DRINKWATER
CHRISTOPHER A. SHAPLEY
LESLIE H. SOUTHWICK
R. DAVID KAUFMAN
JOHN E. MILNER
R. WILSON MONTJOY, II
WALTER S. WEEMS
JAMES A. KEITH
JOSHUA J. WIENER
LOUIS G. FULLER
W. ROONEY CLEMENT, JR.
BROOKS EASON
JOHN E. WADE, JR.
J. PERRY SANSING
WILSON H. CARROLL
C. VICTOR WELSH, III
LISA E. BOURDEAUX
JAMES L. HALFORD
GRANVILLE TATE, JR.
JAMES W. YOUNG, JR.

MAILING ADDRESS:
POST OFFICE DRAWER 119
JACKSON, MISSISSIPPI 39205

TELEPHONE:
601-948-3101

EDMUND L. BRUNINI
OF COUNSEL

R. GORDON GRANTHAM
(1912-1986)

June 22, 1987

Alva Temple
Route 6, Box 416
Columbus, MS 39701

Henry Weiss
Post Office Box 601
Columbus, MS 39701

Jolly Paulette McCarty
707 11th Street
Pascagoula, MS 39567

Earl F. Boyd
Route 5, Box 112
Tylertown, MS 39667

Thomas L. Goldman
Post Office Box 1625
Meridian, MS 39301

Jesse Karr Hurdle
Route 1, Box 361
Holly Springs, MS 38635

Marshall C. Watkins
3505 Forest Hill Road
Jackson, MS 39212

Robert C. Travis
Post Office Box 651
Jackson, MS 39205

Re: Cedar Chemical Corporation - Vicksburg, MS

Gentlemen:

Enclosed is a copy of the Brief which we have this day filed with Colonel Blalock in the above-referenced proceeding. By this cover letter, I wish to summarize the issues the Commission faces.

The Commission's inquiry is whether under the Mississippi Hazardous Waste Management Regulations (MHWMR), Cedar Chemical Corporation's surface impoundments (pond) at its Vicksburg Plant is a hazardous waste storage facility subject to Parts 264 and 265 of the MHWMR. Succinctly stated, those regulations would require the impoundment to be closed, which in turn jeopardizes the future of the plant. The Commission's inquiry requires a determination of what is a "hazardous waste". This Commission is clearly empowered to make that determination. Miss. Code Ann. § 17-17-27(1).

Initially, it was asserted that because of the generation of dinoseb, the pond should be regulated as a hazardous waste

unit. This Commission determined in Order No. 1153-86 that such was not the case. Secondly, it was suggested that the surface impoundment could not pass the EP toxicity test. After the test was performed in November, however, the impoundment passed. Now it is asserted that the surface impoundment when operated by a former owner generated two hazardous wastes, K098 and K041, for approximately two years in the early 1980's. K098 and K041 are EPA listed hazardous waste generated in the production of the chemical toxaphene. It is this third try to which the enclosed Brief is addressed.

The record is clear that the former owner did not generate a process waste of the type contemplated when K098 and K041 were listed. The EPA at the time those two listings were promulgated, as with any other hazardous waste listing, was forced to describe the waste in a so-called "Listing Background Document". A review of the Listing Background Document shows that toxaphene was being produced in 1980 at only two plants in the country, Vicksburg and at the Hercules Plant in Brunswick, Georgia. The processes at the two plants were totally different. Solely on the basis of data available from the Hercules Plant, K098, a process waste water containing high concentrations of toxaphene and K041, a sludge containing high concentrations of toxaphene, were listed by EPA as hazardous. Hercules generated 7 tons a day of process sludge containing 140 pounds of toxaphene. The testimony in this proceeding, however, of Sonny Keene, Plant Production Manager and Dr. Bill Gastrock, Plant Chemist, demonstrates that Vicksburg generated no process waste water with any detectable level of toxaphene and that the small amount of toxaphene contained in the impoundment was the product of purely deminimis losses of toxaphene product; thus, the application of the deminimis rule. The sole basis, according to the Listing Document, for the K098 and K041 listing was the heavy concentration of toxaphene contained in the process waste streams. It is the position of Cedar Chemical, therefore, that K098 and K041 were not generated at Vicksburg.

The suggstion that the respondent has another forum, via a delisting petition, to test the EPA's assertion on K098 and K041 is ludicrous. Delisting is not only expensive, it is time-consuming and extremely difficult to obtain in any case, due to the onerous regulatory requirements. It could take months (some estimate up to two years), to work its way through EPA. During the interim, the plant is subject to

fines of $25,000 per day if the impoundment remained open. On the other hand, the Vicksburg Plant could not operate without the use of the impoundment. More importantly, why should this company go to the time and expense of a delisting petition for a listing error made by EPA? It is ironic to me that EPA suggests to this Commission that it is clear that K098 and K041 were generated in Vicksburg and we should pay for the expense of delisting. If it is so clear, why did it take EPA almost a year after we filed our motion to dismiss and months after the dinoseb hearing and the successful EP toxicity test, to raise K098 and K041 as a basis for regulating the pond?

This company has been forced to operate under the cloud of RCRA regulation for over a year. It has been forced to incur thousands of dollars in legal fees and expert witness fees. The continued cloud of RCRA regulation has had an adverse impact on the plant, and its operations. For that reason, it is respectfully submitted that a prompt adjudication is something to which this respondent is entitled under fairness and equity. Accordingly, in order to expedite The Commission's consideration, I have incorporated a draft Order for the Commission's consideration. We sincerely request that the matter be resolved at the June meeting.

Respectfully submitted,

BRUNINI, GRANTHAM, GROWER & HEWES

William L. Smith

William L. Smith

WLS:lrw
Enclosures
cc: Art Prestage

BEFORE THE MISSISSIPPI COMMISSION ON NATURAL RESOURCES
BUREAU OF POLLUTION CONTROL

IN THE MATTER OF:

MISSISSIPPI COMMISSION ON
NATURAL RESOURCES

vs. Order Nos. 1046-86
1153-86

CEDAR CHEMICAL CORPORATION,

Respondent.

BRIEF SUBMITTED ON BEHALF OF RESPONDENT, CEDAR CHEMICAL CORPORATION

This brief is submitted on behalf of the Respondent, Cedar Chemical Corporation ("Cedar"), at the the Commission's request, to outline issues presented for determination by the Commission and facts and law supporting the Respondent's position with respect to each of the issues presented.

PLEADINGS

The issues have been defined (and to some extent refined) by the pleadings and prior orders in this case, namely: (1) Complainant's Complaint dated July 9, 1986; (2) Commission Order No. 1046-86; (3) Respondent's Motion to Dismiss; (4) Commission Order of Dismissal No. 1153-86; (5) Letter from Sam Mabry, Director, Hazardous Waste Division, to Fred L. Ahlers, Plant Manager of Respondent's Vicksburg Chemical Plant dated April 15, 1987, and (6) Letter from Allen T. Malone, counsel for Respondent, to Sam Mabry dated April 29, 1987.

PROOF

Substantial evidence and testimony were presented by Cedar at the first hearing in this case held before the Commission on September 16, 1986, and again at the second hearing on May 27, 1987. The evidence presented at the September hearing is summarized in the Commission's Order No. 1153-86, and is contained in the September hearing transcript, Vol. 1.

At the May hearing, three witnesses testified for Cedar, and were cross-examined by counsel for the Department. Cedar's witnesses were James D. (Sonny) Keen, Production Manager at the Vicksburg Chemical Plant; Dr. Bill Gastrock, Chief Chemist at the Vicksburg Plant; and Gary N. Dietrich, who in 1980 served as Deputy Director of the Environmental Protection Agency and was directly responsible for development of hazardous waste listings under 40 CFR Part 261, including the KO98 and KO41 listings which were the subject of the May hearing.

Cedar is also submitting herewith, in affidavit form, testimony of Fred L. Ahlers, Plant Manager of the Vicksburg Chemical Plant from 1976 to the present (primarily regarding the effects that closure of the subject Surface Impoundment would have on the Vicksburg Chemical Plant); Sam Mabry, Director, Hazardous Waste Division, Bureau of Pollution Control, Mississippi Department of Natural Resources (regarding the Bureau's ability to regulate the Surface Impoundment even if it is not deemed a hazardous waste unit under the Mississippi Hazardous Waste Management Regulations (MHWMR)); and Hubert Johnston, Chemist with Environmental Protection Systems, Inc.

The Department has stated its intention to introduce an additional Affidavit of Mr. Mabry, as well as Affidavits of two EPA employees - James E. Scarborough, Chief, Residuals Management Branch, EPA Region IV, and Matthew A. Straus, Chief, Waste Characterization Branch, EPA Washington, D.C.

ISSUES

The ultimate question to be decided by the Commission is whether the Surface Impoundment (a pond with a capacity for 3.5 to 5 million gallons of water) at the Vicksburg Chemical Plant is a hazardous waste unit subject to regulation under the MHWMR by virtue of the so- called "mixture rule" at §261.3, due to prior treatment, storage or disposal of hazardous wastes listed under MHWMR §261. If so, unless the "de minimis exception" to the "mixture rule" is applicable, it is undisputed that Cedar would be required to discontinue use of the pond and close it, thereby causing at least a temporary if not permanent closure of the Plant itself.

Originally, it was the Department's position that disposal of dinoseb wastes in the pond after November 19, 1980, (the effective date specified in the federal statute, Resource Conservation and Recovery Act or "RCRA.") brought it within the provisions of the MHWMR, dinoseb being a hazardous waste listed under Section 261. After a lengthy hearing on September 16, 1986, the Commission held that any discharge of dinoseb to the pond was within the de minimis exception. Based on the evidence presented, the Commission granted Cedar's motion to dismiss.

Following the September hearing, the Department subjected the sediment in the pond to another round of sampling and analysis. The undisputed results showed that the sediment did not have any of the "characteristics" of hazardous wastes listed in the MHWMR. The Company thus passed the second test.

The Department finally asserted in April, 1987, based on an advisory opinion which had been sought from EPA, that from November, 1980 until October, 1982, the prior owner of the Vicksburg Chemical Plant had discharged to the pond "untreated process wastewater from production of toxaphene" (which is listed as "KO98" under Section 261.32 of the MHWMR) and that it had generated "wastewater treatment sludge from the production of toxaphene" (KO41 under Section 261.32). Whether the Department is correct, and whether the pond should thus be designated a hazardous waste unit regulated under the MHWMR, will depend on resolution of the following issues:

ISSUE NO. 1

Should the Commission interpret, and specifically amend, MHWMR 261.32 to exclude from the KO98 and KO41 hazardous waste listings wastes generated at the Vicksburg Plant from November, 1980 to October, 1982?

ANSWER

Yes.

FACTS AND LAW

A. The listing background document (Cedar Exhibit 16) states that the basis for the KO98 and KO41 listings is the heavy concentration of toxaphene in process wastewater and in sludge

resulting from treatment of process waste. (see Cedar Exhibit 16 attached hereto and testimony of Gary N. Dietrich).

B. Data in the listing back ground document and testimony at the hearing demonstrate that the KO98 and KO41 listings were promulgated solely on the basis of heavily toxaphene contaminated wastes generated by Hercules Incorporated at its Brunswick, Georgia Plant.

C. The toxaphene manufacturing process used at the Vicksburg Plant started with chlorination of pure camphene; the process was substantially different from the Hercules' process, which involved production of impure camphene from pine stumps, requiring substantial filtration; and the Vicksburg process generated no toxaphene contaminated process wastewater nor sludge of the type generated at the Hercules Plant. (Testimony of James D. Keen and Cedar Exhibits 12, 13, 14 and 15)

D. HCl scrubberwater generated at the Vicksburg Plant, which the Department contends to be KO98 waste, contained no detectible level of toxaphene. (Testimony of Bill Gastrock and Listing Background Document)

E. The Listing Background Document contains no data to support the claim that Vicksburg's wastes are of the type intended to be regulated as shown in the stated basis for the KO98 and KO41 listings. (See Cedar Exhibit 16 and testimony of Gary N. Dietrich).

F. If EPA had been aware of the differences between the processes used at the two plants and if the analytical data

presented to the Commission at the May hearing had been available to EPA when the KO98 and KO41 listings were promulgated, the Vicksburg wastes would have been specifically excluded. (Testimony of Gary N. Dietrich)

G. The Commission has clear authority to interpret and, if necessary, revise the KO98 (untreated process wastewater from the production of toxaphene) and KO41 (wastewater treatment sludge from the production of toxaphene) listings as promulgated in MHWMR 261.32 so as to exclude any wastes generated at Cedar's Vicksburg Plant from November, 1980 to October, 1982 under the following statutes and administrative rules:

Miss. Code Ann. §17-17-27(1) provides that:

> ". . . The Commission shall adopt such rules and regulations as may be needed to specify methodology and procedures to meet the requirements of this Chapter,
>
> which shall include at a minimum:
>
> (a) Criteria for determination of whether any waste or combination of wastes is hazardous for the purposes of this Chapter; . . .
>
> (j) other rules and regulations as the Commission deems necessary to manage hazardous wastes in the State, provided that such rules and regulations shall be equivalent to the United States Environmental Protection Agency's rules and regulations." [emphasis supplied]

Additionally, Rule A, Section 8 of the Administrative Rules and Regulations of the Mississippi Commission on Natural Resources authorizes the Commission to:

> "study, revise and promulgate departmental regulations as necessary or as required." [emphasis supplied]

ISSUE NO. 2

Would the Commission's interpretation and amendment of 261.32 to exclude the Respondent's wastes from KO98 and KO41, as aforesaid, afford a basis for EPA to withdraw approval of Mississippi's Hazardous Wastes Program?

ANSWER

No.

FACTS AND LAW

A. EPA's authorization of State Hazardous Waste Programs requires only that State programs be "consistent with the Federal Program" (40 CFR §271.4) and that the State program adopt a list of hazardous wastes and set of characteristics for identifying hazardous wastes "equivalent to those under 40 CFR, Part 261." (40 CFR §271.9) [emphasis supplied]

B. Gary Dietrich, the person charged by EPA with responsibility for listing the hazardous waste testified that the Vickburg waste streams were not the type EPA intended to cover with the KO98 and KO41 listings because they did not contain high concentrations of toxaphene. A determination by this Commission that the KO98 and KO41 listings did not include the Vicksburg toxaphene waste streams is thus both consistent with and equivalent to the intent of the EPA listings.

ISSUE NO. 3

Should Cedar be required to expend substantial funds and effort to "delist" Vicksburg's previous wastes which the Listing Background Document, when read in light of the evidence presented to the Commission, clearly shows to be beyond the purpose of the listings?

ANSWER

No.

FACTS AND LAW

A. Delisting is a difficult, expensive, and time-consuming process. (Testimony of Gary N. Dietrich, May 27, 1987).

B. There is no rational basis for requiring Cedar to delist the Vicksburg wastes, when the Listing Background Document presents no data to demonstrate why such wastes should be within the scope of the subject hazardous waste listings, and when data subsequently developed by both the Respondent and the Bureau demonstrate clearly that the stated basis for the KO98 and KO41 listings have no application to wastes previously generated at the Vicksburg Plant. (Testimony of Gary N. Dietrich, May 27, 1987).

C. The Vicksburg Chemical Plant could not operate if it were required to discontinue use of the pond while awaiting a ruling on a delisting petition. (Affidavit Testimony of Fred L. Ahlers, Plant Manager)

ISSUE NO. 4

Were losses of toxaphene from manufacturing operations at the Vicksburg Plant from November, 1980 through October, 1982 exempt from regulation under the "de minimis rule" codified at MHWMR 261.3(a)(2)(iv)(D)?

ANSWER

Yes.

FACTS AND LAW

A. Toxaphene itself, if abandoned or disposed of, is a listed hazardous waste under MHWMR Section 261.33 (Listing No. P123).

B. As was the case with dinoseb, the undisputed evidence presented to the Commission demonstrates that the only losses of toxaphene which would have been discharged into the Surface Impoundment derived from de minimis losses of the product from manufacturing operations at the Plant. (Testimony of James D. Keen and Gary N. Dietrich)

C. Concentrations of toxaphene presently found in the pond sediments are consistent with de minimis losses. (Testimony of Gary N. Dietrich)

D. Gary N. Dietrich, who supervised the drafting of the RCRA "de minimis exception" testified that in his opinion, the types of toxaphene losses which occurred at the facility were exactly the type contemplated by the exception, thereby exempting the Surface Impoundment from RCRA regulations affecting hazardous waste facilities.

ISSUE NO. 5

Does continued use of the Surface Impoundment at the Vicksburg Plant pose any threat to human health or the environment?

ANSWER

No.

FACTS AND LAW

A. Evidence presented at the May hearing clearly demonstrates that continued use of the Surface Impoundment does

not pose any threat to human health or to the environment. (Testimony of Gary N. Dietrich and Dr. Bill Gastrock)

B. Indeed, Mr. Dietrich testified that if Cedar is forced to discontinue using the pond, a valuable environmental safeguard will be lost, inasmuch as the Surface Impoundment is currently used to collect contaminated storm water runoff in the vicinity of the Plant. If the pond were closed, surface waters would no longer be protected from runoff from the Plant Site. (See testimony of Gary N. Dietrich and Affidavits of Fred Ahlers and Sam Mabry.) His testimony was consistent with the 1983 recommendation of the Bureau's Industrial Waste Water Section, who stated: "the impoundment should be left open to treat runoff from the plant and act as an emergency spill control impoundment under NPDES." (Pg. 160, September 16, 1986 Transcript)

C. Moreover, evidence was presented at the hearing that toxaphene has a high affinity for soil and low solubility in water, which means it is highly unlikely that toxaphene found in the sediments of the pond will migrate to surface or subsurface waters in concentrations of regulatory concern. (Testimony of Gary N. Dietrich and Bill Gastrock)

D. Samples taken from monitoring wells located around the Surface Impoundment have revealed no toxaphene. (See Affidavit of Hubert Johnston)

ARGUMENT

The approach which EPA has urged the Bureau and the Commission to adopt in interpreting the scope of the subject

hazardous waste listings under the MHWMR is contrary to common sense. It is undisputed that the listings were promulgated in order to regulate waste streams and sludges believed to be heavily contaminated with toxaphene. Both the Listing Background Document and the evidence presented before the Commission make it clear that such wastes were generated only at the toxaphene manufacturing plant operated by Hercules Incorporated at Brunswick, Georgia - not at the Vicksburg Plant. The Department does not contest that fact, but suggests, at the apparent insistence of EPA, that wastes which the previous owner of the Vicksburg Plant ceased producing over four years ago should nevertheless be regulated as if they were KO98 and KO41 wastes.

EPA's approach would have the Commission apply the listings to a waste stream (HCl scrubberwater) which all of the evidence presented before the Commission shows to contain no detectable levels of toxaphene, and to pond sediment which passed analyses using both the EP toxicity method specified in the MNWMR as well as the more stringent TCLP method. Not only would EPA's approach, if adopted by the Commission, serve no useful environmental purpose, it would actually eliminate a valuable hazardous waste management system at the Vicksburg Plant, which protects surface waters from contaminated storm water runoff in the vicinity of the Vicksburg Plant. In addition the EPA approach would cause Cedar to incure monumental expense for closure of the Surface Impoundment, and, in all likelihood, eliminate the Vicksburg Plant as an important employer in Warren County.

The proof presented to the Commission demonstrated that no threat whatsoever to human health or the environment is posed by the levels of toxaphene present in the sediment beneath the surface impoundment. The Bureau itself has stipulated that maintenance of the Surface Impoundment serves the valuable environmental function of protecting surface waters from possible contamination. It has also stipulated that there are adequate statutes and regulations at the Bureau's disposal to regulate the pond in such a way as to protect groundwater from contamination, if indeed toxaphene or other wastes contained in the sediment of the pond should ever pose any such threat. (See Affidavit of Sam Mabry.)

Finally, the Department has suggested that the interpretation and amendment of the MHWMR sought by Cedar in this case could jeopardize the status of the State's hazardous waste program and further, that Cedar should go through the expensive and time consuming procedure of petitioning EPA to "delist" the Vicksburg wastes. These suggestions ignore the central fact established in this case, namely, that there never was any rational basis for lumping the Vicksburg wastes in with the highly contaminated toxaphene wastes which were generated by Hercules at its Brunswick, Georgia Plant at the time the subject listings were promulgated. Cedar is only asking the Commission to interpret the rules in accordance with the stated basis on which they were promulgated, and thereby correct previous misapprehensions which have already caused Cedar to incur substantial and unnecessary expense.

SUMMARY

Cedar respectfully urges the Commission at its June, 1987 meeting:

A. To interpret and specifically amend MHWMR §261.32 to remove all waste streams generated at the Vicksburg Plant from November 19, 1980 to October 31, 1982 from the scope of hazardous waste listings KO98 and KO41;

B. To determine, based on the evidence presented to the Commission, that any losses of toxaphene in the course of manufacturing operations at the Vicksburg Plant from and after November 19, 1980 were de minimis losses within the meaning and intent of MHWMR 261.3(a)(2)(iv)(D), and thus exempt from regulation as hazardous waste.

C. To hold that the subject Surface Impoundment is not a regulated hazardous waste unit under the MHWMR; and

D. To enter an Order granting the Respondent's Motion to Dismiss the Complaint herein and vacating the provisions of Order No. 1046-86 of the Commission dated August 26, 1986, all in accordance with the proposed Order enclosed herewith.

Respectfully submitted,

By: William L. Smith

William L. Smith
Brunini, Grantham, Grower & Hewes
1400 Trustmark Building
248 Capitol East
Jackson, MS 39201
(501) 948-3101

By: Allen T. Malone

Allen T. Malone
APPERSON, CRUMP, DUZANE & MAXWELL
2610 - 100 North Main Building
Memphis, TN 38103
(901) 525-1711

CEDAR CHEMICAL
CORPORATION
EXHIBIT NO. 12

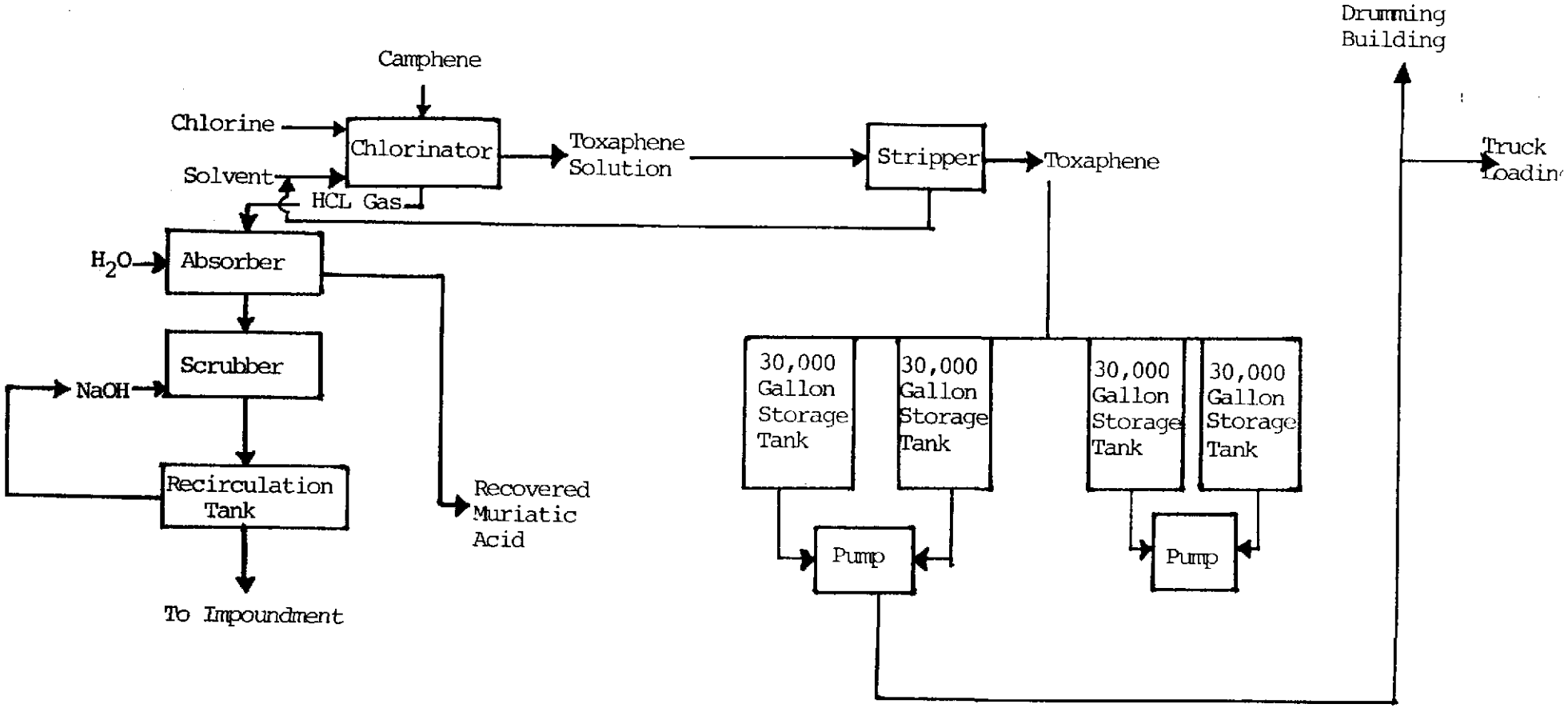

VICKSBURG CHEMICAL/VERTAC
TOXAPHENE PRODUCTION SCHEMATIC

CEDAR CHEMICAL
CORPORATION
EXHIBIT NO. 13

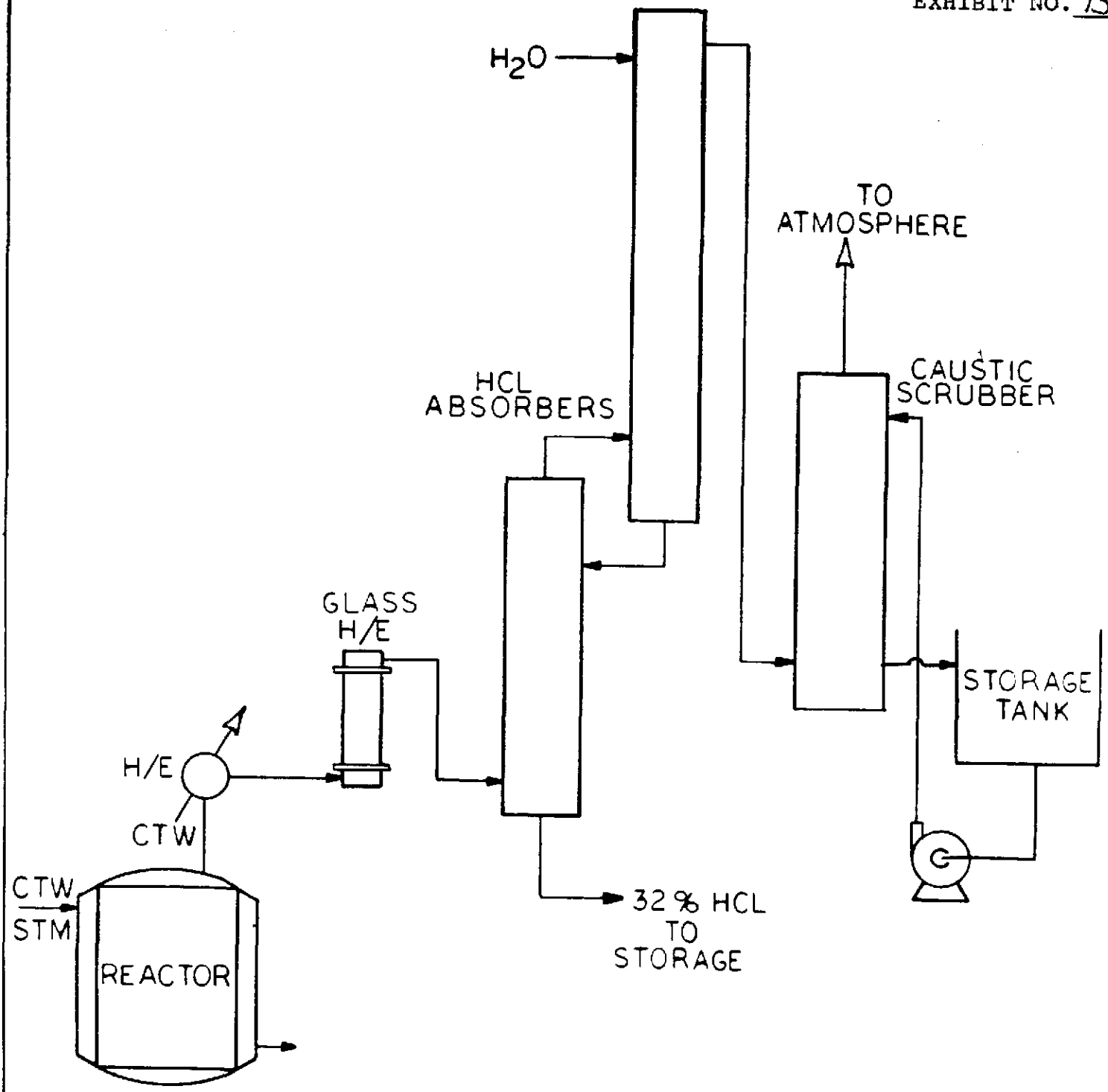

TOXAPHENE
EMISSIONS
CONTROL
SYSTEM

VERTAC CHEMICAL

CEDAR CHEMICAL
CORPORATION
EXHIBIT NO. 14

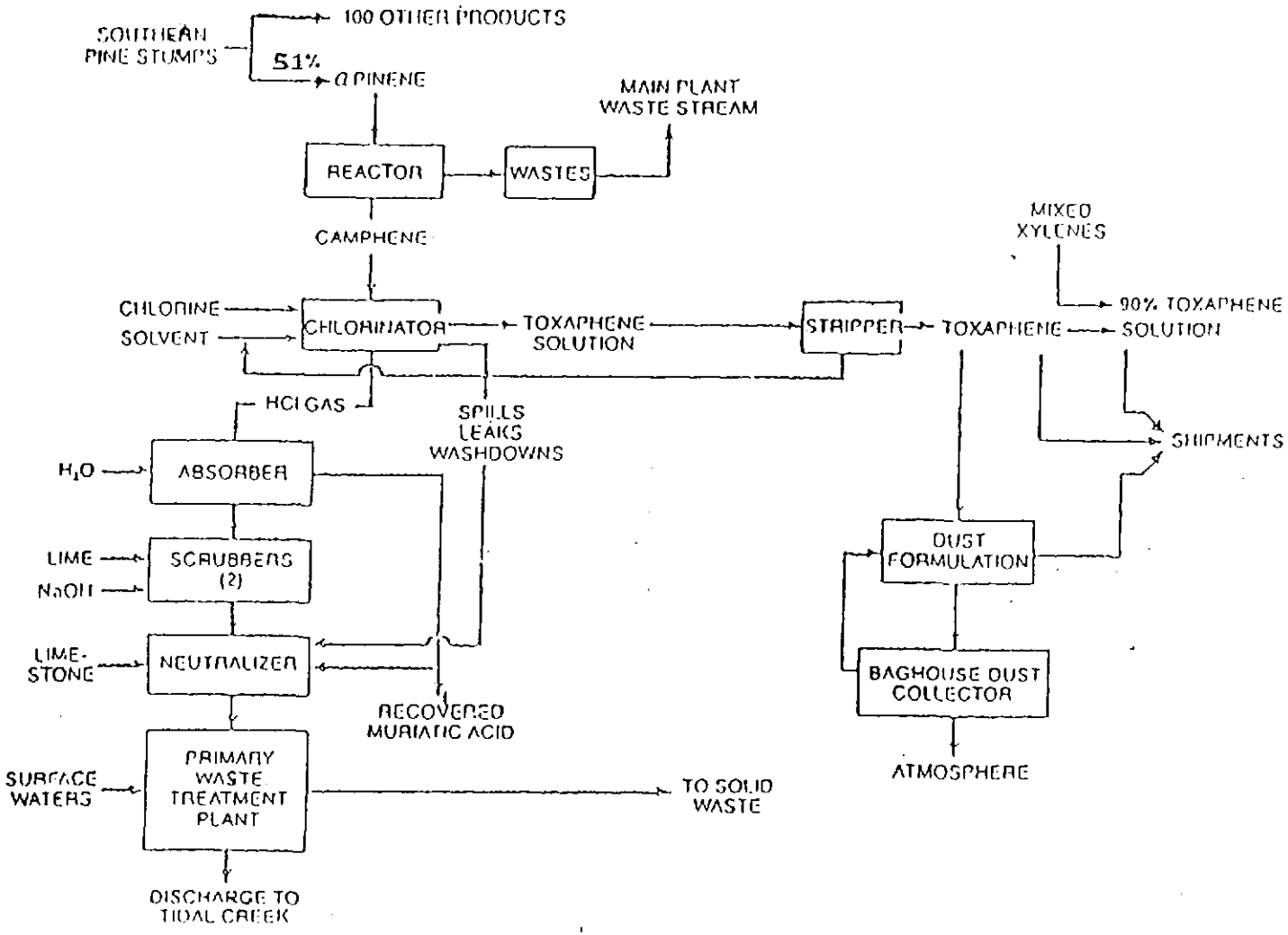

(41)

Figure 1. HERCULES' PRODUCTION AND WASTE SCHEMATIC FOR TOXAPHENE

CEDAR CHEMICAL
CORPORATION
EXHIBIT NO. 15

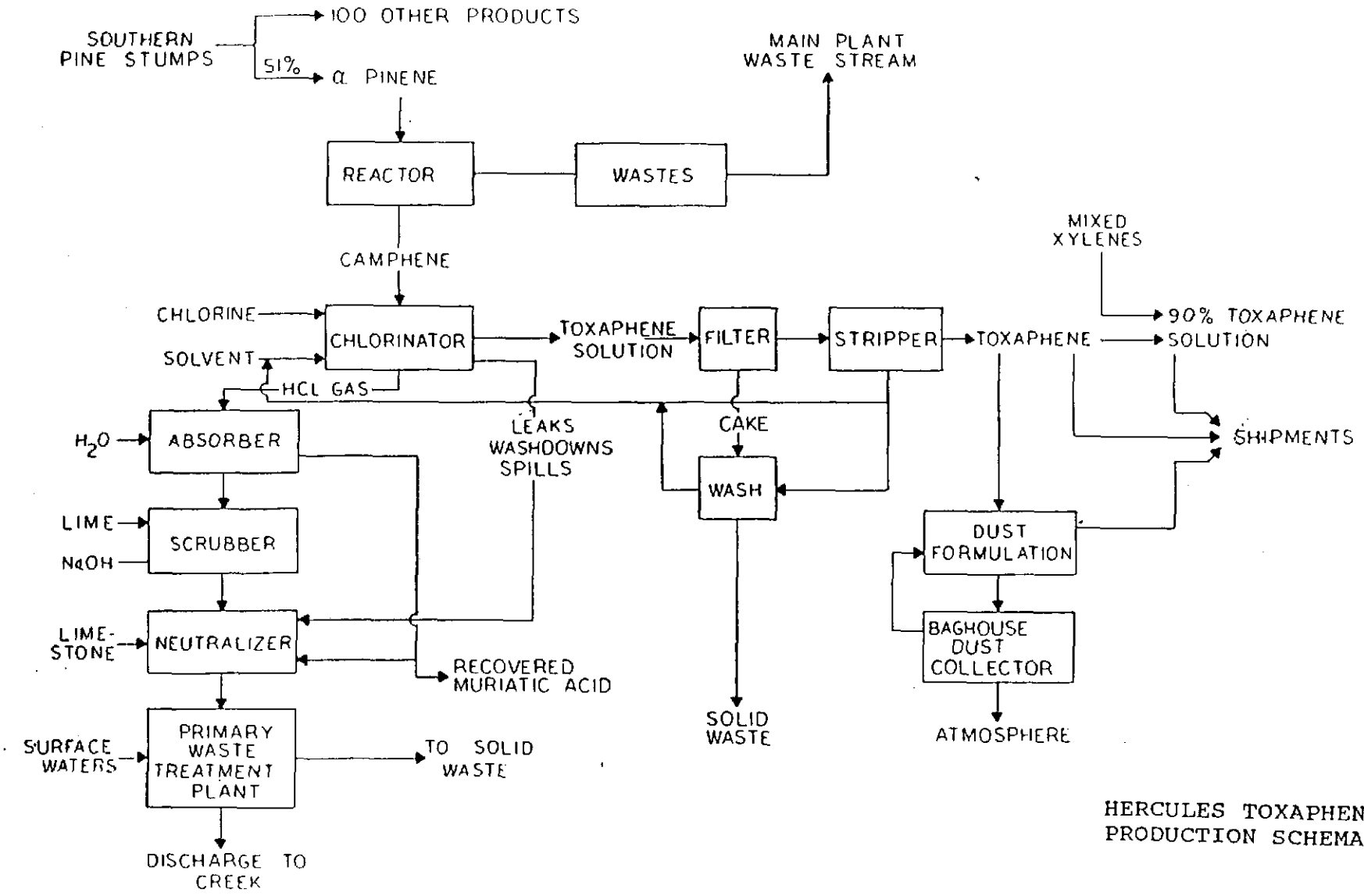

HERCULES TOXAPHENE
PRODUCTION SCHEMATIC

CEDAR CHEMICAL
CORPORATION
EXHIBIT NO. 116

LISTING BACKGROUND DOCUMENT

TOXAPHENE PRODUCTION

Wastewater Treatment Sludge from the Production of Toxaphene (T)

Untreated Process Wastewater from the Production of Toxaphene (T)

I. Summary of Basis for Listing

The production of toxaphene, a chlorinated hydrocarbon pesticide, results in the generation of process wastewater containing heavily diluted concentrations of toxaphene, and wastewater treatment sludges that contain approximately one percent of toxaphene by weight.

The Administrator has determined that process wastewater and wastewater treatment sludge from toxaphene production may pose a substantial present or potential hazard to human health or the environment when improperly transported, treated, stored, disposed of or otherwise managed, and therefore should be subject to appropriate management requirements under Subtitle C of RCRA. This conclusion is based on the following considerations:

1) Toxaphene is present in each of these waste streams; in the case of the wastewater treatment sludge, if it is found in very high concentrations. Toxaphene has been reported to cause cancer in laboratory animals and is extremely toxic. Toxaphene has also been recognized by the Agency as exhibiting substantial evidence of being carcinogenic. It is also a potent teratogen and has been shown to be mutagenic.

2) Approximately 7 tons of wastewater treatment sludge containing about 140 lbs. of toxaphene are generated per production day. About 19,000 tons of sludge are already disposed of in a landfill in Georgia. (5)

CEDAR CHEMICAL
CORPORATION
EXHIBIT NO. 16

C. Waste Generation and Management*

At the Hercules plant, wastewater is generated from the toxaphene production process (leaks, spills and washdowns), as well as from the scrubbing of vent gases in the HCl absorption and recovery step (see Figure 1).

(2) The volume of wastewater treated averages 4.4-4.6 liters/sec (3) (0.10-0.15 MGD).

2) The treated wastewater is directly discharged to a navigable waterway.

In Hercules' toxaphene wastewater treatment system, an average of 7 tons/day of wastewater treatment sludge (settled solids) is generated. (4,5)* The sludge results from the addition of diatomaceous earths and lime to the wastewater as sorption [sic] agents for the removal of toxaphene from the wastewater. (5)

*Variations in wastewater treatment systems or in wastewater sources at the two plants may result in different concentrations of toxaphene in the wastewater treatment sludges.

AFFIDAVIT OF SAM MABRY
Called As An Adverse Witness
By Cedar Chemical Corporation

STATE OF MISSISSIPPI

COUNTY OF HINDS

Affiant, after being first duly sworn, did state that the following facts are true and correct:

My name is Sam Mabry. I am the Director of the Hazardous Waste Division of the Bureau of Pollution Control of the Mississippi Department of Natural Resources. Throughout the last year, I have served in the position of trying to determine on behalf of the Mississippi Department of Natural Resources, Bureau of Pollution Control, if the surface impoundment operated by Cedar Chemical Corporation at its Vicksburg, Mississippi, facility is a regulated storage unit pursuant to the Mississippi Hazardous Waste Management Regulations (MHWMR).

Attached to this Affidavit as Exhibit 1 is a copy of an October 22, 1986 letter which I wrote to James H. Scarborough, Chief of the Residuals Management Branch of the Waste Management Division of Region IV of the EPA. The statements made in that letter by me are true and correct.

At present, the surface impoundment in Vicksburg is being monitored on the basis of 15 ground water monitoring wells which the company placed around the impoundment at the request of the Bureau of Pollution Control. Periodic reports on the existence or lack thereof of contaminants in the ground water monitoring wells are being provided by the

company to the Bureau of Pollution Control. Moreover, the discharge of water from the surface impoundment is done in accordance with an NPDES permit issued by the Mississippi Department of Natural Resources. Discharges of water from the impoundment pursuant to the NPDES permit are monitored and the results given to the Bureau of Pollution Control. Regardless of the decision by the Commission as to whether this facility is a regulated storage unit pursuant to MHWMR, the company pursuant to other statutory enforcement powers at the disposal of the Mississippi Department of Natural Resources will be required to continue the ongoing ground water assessment program, the NPDES water monitoring program and will be required to take any remedial action determined to be appropriate by the Bureau of Pollution Control and otherwise manage the impoundment in an environmentally sound manner.

Subsequent to August 1983, the Industrial Waste Water Section of the Bureau of Pollution Control, Mississippi Department of Natural Resources, issued a written report on the Vicksburg Plant of Cedar Chemical Company and specifically addressed the surface impoundment which is at issue in this proceeding. In that written report the Industrial Waste Water Section stated as follows:

> The Industrial Waste Water Section believes the impoundment should be left open to treat runoff from the plant and act as an emergency spill control impoundment under NPDES.

In approximately January of 1987, James E. Scarborough said that they wanted to call in Matt Straus, Chief of the Waste Identification Branch of the Office of Solid Waste with EPA Headquarters in Washington. The staff of the Mississippi Bureau of Pollution Control accordingly agreed to accept whatever decision Matt Straus reached. At the time we made that agreement, we obviously had no idea whether Straus would determine that this was a MHWMR regulated facility or was not, but were willing to accept his decision on the interpretation of these Mississippi regulations as our own.

The Affiant sayeth further not.

Sam Mabry

SAM MABRY

STATE OF MISSISSIPPI

COUNTY OF HINDS

Came on before me this day, the above identified Sam Mabry who being by me duly sworn did state and affirm that the above and foregoing statements contained in this Affidavit are true and correct.

This the 23rd day of June, 1987.

Margie S. Biedenharn
NOTARY PUBLIC

My Commission Expires:
My Commission Expires Dec. 7, 1987

BEFORE THE MISSISSIPPI COMMISSION ON NATURAL RESOURCES
BUREAU OF POLLUTION CONTROL

IN THE MATTER OF:

MISSISSIPPI COMMISSION ON
NATURAL RESOURCES

vs. Order No. 1153-86

CEDAR CHEMICAL CORPORATION,

Respondent.

AFFIDAVIT OF FRED L. AHLERS

STATE OF MISSISSIPPI

COUNTY OF WARREN

The undersigned, Fred L. Ahlers, being duly sworn, deposes and states as follows:

1. This Affidavit is to supplement my previous testimony in this case before the Commission on September 16, 1986, pursuant to the proce dure agreed upon in the course of the hearing before the Commission on May 27, 1987.

2. I presently serve as Plant Manager of the Cedar Chemical Corporation ("Cedar") Vicksburg Chemical Plant, Vicksburg, Mississippi and have served in that capacity since I was hired as Plant Manager by the former owner, Vertac Chemical Corporation, in August, 1976.

3. My estimate of the total cost that would be incurred to close the Vicksburg Chemical Plant's Surface Impoundment by dewatering and capping the sediments in place is

$1,500,000 to $1,800,000. If the pond sediments were required to be removed to an off-site landfill, the total cost involved in closure would be at least $6,000,000, in my opinion. The estimated cost of replacing the Surface Impoundment with tanks adequate to serve on-going operations of the Vicksburg Chemical Plant currently served by the Surface Impoundment is $1,500,000 to $2,000,000.

4. In my judgment expenditures of the type identified above in order to keep the Vicksburg Chemical Plant operating could not possibly be justified by Cedar management at this time. The principal product produced at the Vicksburg Plant is potassium nitrate, a fertilizer, which has suffered price erosion in recent years as a result of the depressed farm economy as well as competition from fertilizer imports. Another product produced at the Plant is nitrogen tetroxide, a component of rocket fuel used in the shuttle program, which Cedar produces under contract with the United States Air Force. Expenditures of the type identified in Paragraph 3 above would represent a significant percentage of Cedar's depreciated book value of the entire plant property and equipment comprising the Vicksburg Chemical Plant. The assets are already encumbered by a deed of trust securing bank debt totalling more than 90% of the book value of the assets.

5. Since I last appeared to testify before the Commission in this case, Cedar has discontinued production of

dinoseb at the Vicksburg Chemical Plant. Dinoseb was the only remaining herbicide produced at the Plant. The total number of employees at the Plant has been reduced as a result of the shut-down of the dinoseb operation from 158 to 130. Even if Cedar could sustain the expenses necessary to close the Surface Impoundment, such closure would require that all operations at the Plant cease, and that employees be laid off for a substantial period of time, pending installation of facilities to replace the surface impoundment. If Cedar were required to discontinue use of the Surface Impoundment pending ruling on a petition to delist the wastes which are the subject of this case, I estimate that the Vicksburg Plant would have to be closed for an even longer period. Neither of these is a viable alternative in my judgment.

6. At the time the KO98 and KO41 hazardous waste listings were proposed prior to their promulgation, they were not brought to my attention, nor, to the best of my knowledge, to the attention of any employee of Vertac Chemical Corporation, which owned the Plant at the time the rules were first proposed. Even if I had been aware that such rules were being proposed, I would not have believed that they could be applicable to any wastes that were ever generated at the Vicksburg Chemical Plant. Neither I nor my production supervisors ever considered that HCl scrubberwater could be "untreated process wastewater from the production of toxaphene," nor would we ever have considered that sediment at the bottom of our Surface Impoundment could ever be

considered "wastewater treatment sludge." I was not aware of any contention that such wastes had ever been produced at the Vicksburg Chemical Plant until the suggestion was made by the Bureau of Pollution Control following the last hearing in this case on September 16, 1986.

7. During the period that toxaphene was produced at the Vicksburg Chemical Plant, the production area was curbed and diked, and segregated from the rest of the Plant including the Surface Impoundment. The only toxaphene that could have entered the Surface Impoundment after November 19, 1980, would have been minor drips and leaks resulting from loading and unloading operations, as well as storm water run-off from areas of the Plant property containing traces of toxaphene in soils and sediments. Toxaphene production at the Vicksburg Chemical Plant was a clean operation and at no time was toxaphene deliberately discharged to the Surface Impoundment.

8. Assuming the Commission determines that the hazardous waste listings K098 and K041 listed under Part 261.32 of the Mississippi Hazardous Waste Management Regulations have no application to the wastes generated at the Vicksburg Chemical Plant prior to the date of the shutdown of the toxaphene manufacturing unit at the Plant in October, 1982, I believe that Cedar is committed to do the following as long as it owns and operates the Vicksburg Chemical Plant:

(a) To continue to sample and analyze groundwater monitoring wells presently installed on the perimeter of the Surface

Impoundment on a regular basis and report analytical results of such samples to the Mississippi Department of Natural Resources promply upon receipt.

(b) To implement such corrective action as shall be reasonably required, in the event the Department should determine on the basis of such analytical results that corrective action is necessary to protect human health or the environment.

(c) To maintain the existing closure fund in tact, and to supplement such fund annually for the remaining useful life of the Vicksburg Chemical Plant in order to provide financial assurance that the Surface Impoundment will eventually be closed when it is no longer needed for waste management, including collection of contaminated storm water runoff.

(d) To maintain the integrity of the containment dikes around the Surface Impoundment.

(e) To continue to comply with all provisions of Cedar's NPDES Permit as it pertains to the treatment and discharge of effluent from the Surface Impoundment, including not only non-hazardous waste water discharged to the Surface Impoundment from inorganic production operations at the Vicksburg Plant, but also surface and storm water runoff received by the Surface Impoundment.

EXECUTED this 11th day of June, 1987.

Fred L. Ahlers

SWORN TO AND SUBSCRIBED before me this 11th day of June, 1987.

NOTARY PUBLIC

My Commission Expires:

November 14, 1990

AFFIDAVIT OF HERBERT A. JOHNSTON
Witness for Cedar Chemical Corporation

STATE OF MISSISSIPPI

COUNTY OF HINDS

After being first duly sworn, the Affiant did state as follows:

My name is Herbert A. Johnston. I have a Ph.D in Chemistry from the University of Southern Mississippi, and am employed by Environmental Protections Systems, Inc., 160 Upton Drive, Jackson, Mississippi, 39209, as an analytical chemist in charge of the Analytical Department of Environmental Protection Systems, Inc.

In November of 1986, the State of Mississippi took split stream samples from the surface impoundment in Vicksburg, Mississippi, operated by Cedar Chemical Corporation. The split stream sample given by the state to Cedar Chemical Corporation was given by Cedar Chemical to our company for analysis. Attached hereto as Exhibit 1 to this Affidavit are the results of the analysis performed on the split stream samples received by my company. I note that while our results were basically consistent with that of the State Chemical Lab, one of the samples is considerably different, sample #86116172. In my opinion, proper statistical analysis of the sampling, if it is to be used to determine the amount of toxaphene in the pond, would require either an averaging of the samples or the establishing of a mean. All of the

results achieved by the Mississippi State Chemical Lab are on the same order of magnitude with the exception of sample #86116172 which is considerably higher. Our results for this sample are one quarter of the state's results. Proper statistical analysis would require, in my opinion, that the state because the difference between this one sample and its remaining 18, either resample and analyze that sample point again or remove the highest and lowest samples and average the remaining. In any event, the average of our total samples represented approximately 200 parts per million toxaphene in the surface impoundment.

We were also given samples by Cedar Chemical of 12 wells which encircle the surface impoundment. These samples were collected on May 16, 1987 and analyzed on May 22, 1987. Attached hereto as Exhibit 2 are those analytical results. As can be seen, no toxaphene could be detected in any of the wells at the known toxaphene detection limits.

Also on May 16, 1987, the company gave to us a composite sample taken from the surface impoundment. Again, this sample was analyzed by EP Tox Extraction for toxaphene and no toxaphene could be found at the detection limit.

While our lab does work for many private entities including Cedar Chemical Corporation, we have also worked for the State of Mississippi, specifically, the Mississippi Department of Natural Resources.

The Affiant sayeth further not.

This the 3rd day of June, 1987.

Herbert A. Johnston
HERBERT A. JOHNSTON

STATE OF MISSISSIPPI

COUNTY OF HINDS

Came on before me this day, Herbert A. Johnston, who by me after being first duly sworn, did state and affirm that the above and foregoing facts are true and correct.

Susan Cargo
NOTARY PUBLIC

My Commission Expires:

My Commission Expires Feb. 7, 1989

Exhibit 1 to Herbert A. Johnston Affidavit

ENVIRONMENTAL PROTECTION SYSTEMS, INC.

P. O. Box 20382 • 160 Upton Drive • Jackson, MS 39209
Telephone: (601) 922-8242
(800) 523-0659

7215 Pine Forest Road • Pensacola, FL 32506
Telephone: (904) 944-0301
(800) 874-0272

LABORATORY REPORT

86.1.3445 | 1/6

CLIENT: Vicksburg Chemical
LOCATION: Vicksburg, MS
DATE: 11/20/86
INVOICE NO.: 011479/ncr

COLLECTED BY: Client (7954)
DATE COLLECTED: See Below
DATE RECEIVED: 11/06/86
DATE ANALYZED: 11/14/86

LABORATORY SAMPLE IDENTIFICATION

86116169 - Location 1 + 1A 6' Depth; 10/30/86; 11:00 a.m.
86116173 - VC-F Location Site 2 + 5 4' Depth; 10/30/86; 12:00 p.m.
86116174 - VC-G Location 3 + 4 4' Depth; 10/30/86; 12:00 p.m.

ANALYSES	IDENTIFICATION NO. 6169	6173	6174	LIMIT	QUALITY CONTROL STANDARD OR SPIKE VALUE	% RECOVERY	RELATIVE % DEVIATION
Arsenic, EP Leachable, mg/l EPA No. D004	0.26	0.714	0.561	5.0	0.010	111	2.5
Barium, EP Leachable, mg/l EPA No. D005	<0.10	0.16	0.24	100.0	1.00	90	0
Cadmium, EP Leachable, mg/l EPA No. D006	0.01	0.03	0.01	1.0	0.20	100	0
Chromium, EP Leachable, mg/l EPA No. D007	<0.01	<0.01	<0.01	5.0	0.50	100	0
Chromium, Hexavalent, EP Leachable, mg/l, EPA No. D007	<0.01	<0.01	<0.01	5.0	0.50	100	0
Lead, EP Leachable, mg/l EPA No. D008	<0.10	0.12	<0.10	5.0	1.00	112	0
Mercury, EP Leachable, mg/l EPA No. D009	<0.001	<0.001	<0.001	0.2	0.002	120	0
Selenium, EP Leachable, mg/l EPA No. D010	<0.003	<0.003	<0.003	1.0	0.010	80	0
Silver, EP Leachable, mg/l EPA No. D011	<0.01	<0.01	<0.01	5.0	0.20	105	0
"EP TOXICITY" Extraction	Yes	Yes	Yes				

COMMENT

Analyses conducted in accordance with 40 CFR, Part 261, July, 1982, Test Methods for Evaluating Solid Waste (SW-846).

CERTIFICATION

Herbert A. Johnston
MANAGER, QUALITY ASSURANCE

MANAGER, ANALYTICAL DEPARTMENT

ENVIRONMENTAL PROTECTION SYSTEMS, INC.

P. O. Box 20382 • 160 Upton Drive • Jackson, MS 39209
Telephone: (601) 922-8242
(800) 523-0659

7215 Pine Forest Road • Pensacola, FL 32506
Telephone: (904) 944-0301
(800) 874-0272

LABORATORY REPORT

86.1.3445 | 2/6

CLIENT: Vicksburg Chemical
LOCATION: Vicksburg, MS
DATE: 11/20/86
INVOICE NO.: 011479/ncr

COLLECTED BY: Client (7954)
DATE COLLECTED: See Below
DATE RECEIVED: 11/06/86
DATE ANALYZED: 11/14/86

LABORATORY SAMPLE IDENTIFICATION

86116169 - Location 1 + 1A 4' Depth; 10/30/86; 10:00 a.m.
86116173 - VC-F Location Site 2 + 5 4' Depth; 10/30/86; 12:00 p.m.
86116174 - VC-G Location 3 + 4 4' Depth; 10/30/86; 12:00 p.m.

ANALYSES	IDENTIFICATION NO. 6169	6173	6174	LIMIT	QUALITY CONTROL STANDARD OR SPIKE VALUE	% RECOVERY	RELATIVE % DEVIATION
Endrin, EP Leachable, mg/l EPA No. D012	<10	<10	<10	0.02	0.4	NA	NA
Lindane, EP Leachable, mg/l EPA No. D013	<10	<10	<10	0.4	0.4	NA	NA
Methoxychlor, EP Leachable, mg/l EPA No. D014	<10	<10	<10	10	0.4	NA	NA
Toxaphene, EP Leachable, mg/l EPA No. D015	<10	<10	<10	0.5	0.4	NA	NA
2,4 - D, EP Leachable, mg/l EPA No. D016	<10	<10	<10	10	0.4	NA	NA
2,4,5 - TP Silvex, EP Leachable, mg/l EPA No. D017	<10	<10	<10	1	0.4	NA	NA
Arsenic, Total, mg/kg	16.0	44.2	12.0		0.010	111	2.5
Toxaphene, mg/kg	334	56	62		1.11	NA	2.3

COMMENT

Analyses conducted in accordance with 40 CFR, Part 261, July, 1982, Test Methods for Evaluating Solid Waste (SW-846).

CERTIFICATION

Herbert A. Johnston
MANAGER, QUALITY ASSURANCE

MANAGER, ANALYTICAL DEPARTMENT

ENVIRONMENTAL PROTECTION SYSTEMS, INC.

P. O. Box 20382 • 160 Upton Drive • Jackson, MS 39209
Telephone: (601) 922-8242
(800) 523-0659

7215 Pine Forest Road • Pensacola, FL 32506
Telephone: (904) 944-0301
(800) 874-0272

LABORATORY REPORT

86.1.3445 | 3/6

CLIENT: Vicksburg Chemical
LOCATION: Vicksburg, MS
DATE: 11/20/86
INVOICE NO.: 011479/ncr

COLLECTED BY: Client (7954)
DATE COLLECTED: See Below
DATE RECEIVED: 11/06/86
DATE ANALYZED: 11/14/86

LABORATORY SAMPLE IDENTIFICATION

86116176 - VC-M Location 9 + 10 + 12 2'Deptn; 10/30/86; 4:00 p.m.

ANALYSES	IDENTIFICATION NO. 6176			LIMIT	QUALITY CONTROL STANDARD OR SPIKE VALUE	% RECOVERY	RELATIVE % DEVIATION
Arsenic, EP Leachable, mg/l EPA No. D004	0.226			5.0	0.010	111	2.3
Barium, EP Leachable, mg/l EPA No. D005	0.40			100.0	1.00	90	0
Cadmium, EP Leachable, mg/l EPA No. D006	0.02			1.0	0.20	100	0
Chromium, EP Leachable, mg/l EPA No. D007	<0.01			5.0	0.50	100	0
Chromium, Hexavelent, EP Leachable, mg/l, EPA No. D007	<0.01			5.0	0.50	100	0
Lead, EP Leachable, mg/l EPA No. D008	<0.10			5.0	1.00	112	0
Mercury, EP Leachable, mg/l EPA No. D009	<0.001			0.2	0.002	120	0
Selenium, EP Leachable, mg/l EPA No. D010	<0.003			1.0	0.010	80	0
Silver, EP Leachable, mg/l EPA No. D011	<0.01			5.0	0.20	105	0
"EP TOXICITY" Extraction	Yes						

COMMENT

Analyses conducted in accordance with 40 CFR, Part 261, July, 1982, Test Methods for Evaluating Solid Waste (SW-846).

CERTIFICATION

Hubert A. Johnston
MANAGER, QUALITY ASSURANCE

MANAGER, ANALYTICAL DEPARTMENT

ENVIRONMENTAL PROTECTION SYSTEMS, INC.

P. O. Box 20382 • 160 Upton Drive • Jackson, MS 39209
Telephone: (601) 922-8242
(800) 523-0659

7215 Pine Forest Road • Pensacola, FL 32506
Telephone: (904) 944-0301
(800) 874-0272

LABORATORY REPORT

86.1.3445 | 4/6

CLIENT: Vicksburg Chemical
LOCATION: Vicksburg, MS
DATE: 11/20/86
INVOICE NO.: 011479/ncr

COLLECTED BY: Client (7954)
DATE COLLECTED: See Below
DATE RECEIVED: 11/06/86
DATE ANALYZED: 11/14/86

LABORATORY SAMPLE IDENTIFICATION

86116176 - VC-M Location 9 + 10 + 12 2'Depth; 10/30/86; 4:00 p.m.

ANALYSES	IDENTIFICATION NO. 6176			LIMIT	QUALITY CONTROL STANDARD OR SPIKE VALUE	% RECOVERY	RELATIVE % DEVIATION
Endrin EP Leachable, mg/l EPA No. D012	<10			0.02	0.4	NA	NA
Lindane, EP Leachable, mg/l EPA No. D013	<10			0.4	0.4	NA	NA
Methoxychlor, EP Leachable, mg/l EPA No. D014	<10			10	0.4	NA	NA
Toxaphene, EP Leachable, mg/l EPA No. D015	<10			0.5	0.4	NA	NA
2,4 - D, EP Leachable, mg/l EPA No. D016	<10			10	0.4	NA	NA
2,4,5 - TP Silvex, EP Leachable, mg/l EPA No. D017	<10			1	0.4	NA	NA
Arsenic, Total, mg/kg	13.4				0.010	111	2.3
Toxaphene, mg/kg	<10				1.11	NA	2.3

COMMENT

Analyses conducted in accordance with 40 CFR, Part 261, July, 1982, Test Methods for Evaluating Solid Waste (SW-846). Due to high background materials, higher than normal dilutions were taken. As noted in 40CFR136 and SW846 detection limits are matrix dependent.

CERTIFICATION

Herbert R. Johnston
MANAGER, QUALITY ASSURANCE

MANAGER, ANALYTICAL DEPARTMENT

ENVIRONMENTAL PROTECTION SYSTEMS, INC.

P. O. Box 20382 • 160 Upton Drive • Jackson, MS 39209
Telephone: (601) 922-8242
(800) 523-0659

7215 Pine Forest Road • Pensacola, FL 32506
Telephone: (904) 944-0301
(800) 874-0272

LABORATORY REPORT

86-1-3445 | 5/6

CLIENT: Vicksburg Chemical
LOCATION: Vicksburg, MS
DATE: 11/20/86
INVOICE NO.: 011479/ncr

COLLECTED BY: Client (7954)
DATE COLLECTED: See Below
DATE RECEIVED: 11/06/86
DATE ANALYZED: 11/14/86

LABORATORY SAMPLE IDENTIFICATION

86116170 - VC-B Location 2 + 5 6' Depth; 10/30/86; 12:00 p.m.
86116171 - VC-C Location 3 + 4 6' Depth; 10/30/86; 12:00 p.m.
86116172 - VC-E Location 1 + 1A 4' Depth; 10/30/86; 11:00 a.m.
86116175 - VC-I Location 1 + 1A 2' Depth; 10/30/86; 11:00 a.m.

ANALYSES	IDENTIFICATION NO. 6170	6171	6172	6175	QUALITY CONTROL STANDARD OR SPIKE VALUE	% RECOVERY	RELATIVE % DEVIATION
Arsenic, Total, mg/kg	4.11	38.1	68.6	115	0.10	111	2.3
Toxephene, mg/kg	244	176	487	84	1.11	NA	NA

COMMENT

Analyses conducted in accordance with 40 CFR, Part 261, July, 1982, Test Methods for Evaluating Solid Waste (SW-846).

CERTIFICATION

Herbert A. Johnston
MANAGER, QUALITY ASSURANCE

MANAGER, ANALYTICAL DEPARTMENT

ENVIRONMENTAL PROTECTION SYSTEMS, INC.

P. O. Box 20382 • 160 Upton Drive • Jackson, MS 39209
Telephone: (601) 922-8242
(800) 523-0659

7215 Pine Forest Road • Pensacola, FL 32506
Telephone: (904) 944-0301
(800) 874-0272

LABORATORY REPORT

86-1-3445 | c/d

CLIENT: Vicksburg Chemical
LOCATION: Vicksburg, MS
DATE: 11/20/86
INVOICE NO.: 011479/ncr

COLLECTED BY: Client (7954)
DATE COLLECTED: See Below
DATE RECEIVED: 11/06/86
DATE ANALYZED: 11/14/86

LABORATORY SAMPLE IDENTIFICATION

86116177 - VC-F Location 17 + 18 2' Depth; 10/30/86; 3:45 p.m.
86116178 - VC-R Location 21 + 22 2' Depth; 10/30/86; 4:30 p.m.

ANALYSES	IDENTIFICATION NO. 6177	6178			QUALITY CONTROL: STANDARD OR SPIKE VALUE	% RECOVERY	RELATIVE % DEVIATION
Arsenic, Total, mg/kg	7.8	22.0			0.010	111	2.3
Toxaphene, mg/kg	<0.2	<0.2			1.11	NA	NA

COMMENT

Analyses conducted in accordance with 40 CFR, Part 261, July, 1982, Test Methods for Evaluating Solid Waste (SW-846).

CERTIFICATION

Herbert A. Johnston
MANAGER, QUALITY ASSURANCE

MANAGER, ANALYTICAL DEPARTMENT

Exhibit 2 to Herbert Johnston Affidavit

ENVIRONMENTAL PROTECTION SYSTEMS, INC.

P. O. Box 20382 • 160 Upton Drive • Jackson, MS 39209
Telephone: (601) 922-8242
(800) 523-0659

7215 Pine Forest Road • Pensacola, FL 32506
Telephone: (904) 944-0301
(800) 874-0272

LABORATORY REPORT

67.1.1013 | 1/4

CLIENT: Cedar Chemical Corporation
LOCATION: Vicksburg, MS
DATE: 05/22/67
INVOICE NO.: 013405/ncr

COLLECTED BY: Client (7954)
DATE COLLECTED: 05/16/67
DATE RECEIVED: 05/16/67
DATE ANALYZED: 05/22/67

LABORATORY SAMPLE IDENTIFICATION

67053026 - Location 1A
67053027 - Location 2
67053028 - Location 4
67053029 - Location 5

ANALYSES	IDENTIFICATION NO. 3026	3027	3028	3029	QUALITY CONTROL STANDARD OR SPIKE VALUE	% RECOVERY	RELATIVE % DEVIATION
Toxephene, ug/l	<0.24	<0.24	<0.24	<0.24	2	91	10

COMMENT

Analyses conducted in accordance with 40 CFR, Part 2b1, July, 1982, Test Methods for Evaluating Solid Waste (SW-846).

CERTIFICATION

MANAGER, QUALITY ASSURANCE

MANAGER, ANALYTICAL DEPARTMENT

ENVIRONMENTAL PROTECTION SYSTEMS, INC.

P. O. Box 20382 • 160 Upton Drive • Jackson, MS 39209
Telephone: (601) 922-8242
(800) 523-0659

7215 Pine Forest Road • Pensacola, FL 32506
Telephone: (904) 944-0301
(800) 874-0272

LABORATORY REPORT

87.1.1013 | 2/4

CLIENT: Cedar Chemical Corporation
LOCATION: Vicksburg, MS
DATE: 05/22/87
INVOICE NO.: 013405/ner

COLLECTED BY: Client (7954)
DATE COLLECTED: 05/18/87
DATE RECEIVED: 05/18/87
DATE ANALYZED: 05/22/87

LABORATORY SAMPLE IDENTIFICATION

87053050 - Location 8
87053051 - Location 5
87053052 - Location 9
87053053 - Location 10

ANALYSES	IDENTIFICATION NO. 3050	3051	3052	3053	QUALITY CONTROL STANDARD OR SPIKE VALUE	% RECOVERY	RELATIVE % DEVIATION
Toxephene, ug/l	<0.24	<0.24	<0.24	<0.24	2	91	10

COMMENT

Analyses conducted in accordance with 40 CFR, Part 261, July, 1982, Test Methods for Evaluating Solid Waste (SW-846).

CERTIFICATION

MANAGER, QUALITY ASSURANCE

MANAGER, ANALYTICAL DEPARTMENT

ENVIRONMENTAL PROTECTION SYSTEMS, INC.

P. O. Box 20382 • 160 Upton Drive • Jackson, MS 39209
Telephone: (601) 922-8242
(800) 523-0659

7215 Pine Forest Road • Pensacola, FL 32506
Telephone: (904) 944-0301
(800) 874-0272

LABORATORY REPORT

87.1.3015 | 3/4

CLIENT: Cedar Chemical Corporation
LOCATION: Vicksburg, MS
DATE: 05/22/87
INVOICE NO.: 013405/ncr

COLLECTED BY: Client (7954)
DATE COLLECTED: 05/16/87
DATE RECEIVED: 05/18/87
DATE ANALYZED: 05/22/87

LABORATORY SAMPLE IDENTIFICATION

87053034 - Location 11
87053035 - Location 12
87053036 - Location 14
87053037 - Location 15

ANALYSES	IDENTIFICATION NO. 3034	3035	3036	3037	QUALITY CONTROL STANDARD OR SPIKE VALUE	% RECOVERY	RELATIVE % DEVIATION
Toxaphene, ug/l	<0.24	<0.24	<0.24	<0.24	2	91	10

COMMENT

Analyses conducted in accordance with 40 CFR, Part 261, July, 1982, Test Methods for Evaluating Solid Waste (SW-846).

CERTIFICATION

John Broussard
MANAGER, QUALITY ASSURANCE

MANAGER, ANALYTICAL DEPARTMENT

ENVIRONMENTAL PROTECTION SYSTEMS, INC.

P. O. Box 20382 • 160 Upton Drive • Jackson, MS 39209
Telephone: (601) 922-8242
(800) 523-0659

7215 Pine Forest Road • Pensacola, FL 32506
Telephone: (904) 944-0301
(800) 874-0272

LABORATORY REPORT

87.1.1015 | 4/4

CLIENT: Cedar Chemical Corporation
LOCATION: Vicksburg, MS
DATE: 05/22/87
INVOICE NO.: 015405/ncr

COLLECTED BY: Client (7954)
DATE COLLECTED: 05/16/87
DATE RECEIVED: 05/18/87
DATE ANALYZED: 05/22/87

LABORATORY SAMPLE IDENTIFICATION

87053038 - Dirt Pond

ANALYSES	IDENTIFICATION NO.				QUALITY CONTROL		
	3038				STANDARD OR SPIKE VALUE	% RECOVERY	RELATIVE % DEVIATION
Toxaphene, mg/l	<0.24				0.002	91	10
"EP TOXICITY" Extraction	Yes				NA	NA	NA

COMMENT

Analyses conducted in accordance with 40 CFR, Part 261, July, 1982, Test Methods for Evaluating Solid Waste (SW-846).

CERTIFICATION

Ann Broussard
MANAGER, QUALITY ASSURANCE

MANAGER, ANALYTICAL DEPARTMENT

AFFIDAVIT OF SAM MABRY
WITNESS FOR MISSISSIPPI
BUREAU OF POLLUTION CONTROL

STATE OF MISSISSIPPI

COUNTY OF HINDS

Affiant, after having been duly sworn, did state that the following facts are true and correct:

My name is Sam Mabry. I am Chief of the Hazardous Waste Division of the Mississippi Bureau of Pollution Control, having served in that capacity since September, 1986. I have a B.S. in Engineering from Mississippi State University.

Part of the purpose and function of my Division is to regulate sources which produce, generate or store hazardous waste substances. Vicksburg Chemical Company has been regulated under RCRA since 1981.

It is my professional opinion that Vicksburg Chemical Company should remain to be regulated since, from November, 1980 until it ceased operation in 1982, it generated a listed hazardous waste substance, K098 (untreated process wastewater from the production of toxaphene) and further, as the wastewater entered the surface impoundment, another listed hazardous waste substance was formed, i.e. K041 process treatment sludge from the production of toxaphene).

Mississippi Hazardous Waste Regulation 261.32 clearly lists the above reference substances as being those intended to be regulated. See Exhibit "A" attached. The State of Mississippi has adopted EPA's regulations as its own regulations. Mississippi, because its regulations are equivalent to EPA, enjoys "primacy", i.e. the privilege of administering its own environmental enforcement programs. Any attempt to lessen or ignore the requirements set by the federal regulations could cause Mississippi to lose

its "primacy" status, thereby causing our hazardous waste enforcement programs to be administered by the federal government. Thus, to "de-list" a hazardous waste substance in this State which is "listed" under the federal regulations could cause adverse consequences for this State.

The Mississippi Bureau of Pollution Control has conducted a sampling of the toxaphene levels in the surface impoundment at Vicksburg Chemical Company and found it to be at 2320 parts per million. Even though the concentration levels of toxaphene are relevant from an environmental standpoint, they bear little relevance with regard to the issue of regulation. The fact remains that two known listed hazardous waste were generated, produced or stored at Vicksburg Chemical Company, and evidence of the same is still present in the surface impoundment some five years after the Facility stopped producing toxaphene. Toxaphene is extremely toxic and is a known cancer-causing substance. The Listings Background Document clearly states the dangerous propensities of toxaphene; thus, the reason for regulation. It is the Bureau's position that additional groundwater monitoring is needed at the facility in order to assess the environmental situation.

It is necessary that this impoundment remain regulated to adequately protect the environment and the citizens of this State. If the wastewater and sludge at this facility is "de-listed" by the Commission, Vicksburg Chemical Company will be free of its obligation to provide financial assurance (insurance) for the impoundment. Thus, if Vicksburg Chemical Company ceases operations in the future and an environmental

problem subsequently arises, or if a clean-up procedure is needed that Vicksburg Chemical Company cannot afford, the State of Mississippi will be saddled with the costs.

It is my opinion that it would be improper for the Commission to, in effect, "de-list" the toxaphene wastewater generated at Vicksburg Chemical Company and the wastewater treatment sludge because this would be a violation of the proper de-listing procedure set forth in Part 260.22 of the Mississippi Hazardous Waste Regulations. See Exhibit "B" attached.

It is further my opinion that there are options available to Vicksburg Chemical Company to "close" the impoundment under RCRA without having to effect an "actual closure." Therefore, the beneficial aspects of the impoundment, i.e., its use as a watershed to prevent run-off of contaminates, could be maintained. The Bureau of Pollution Control is willing to assist Vicksburg Chemical Company in its study of various options.

Sam Maloy
AFFIANT

Sworn to and subscribed before me, this the 23rd day of June, 1987.

Mary L Bredenkamp
NOTARY PUBLIC

MY COMMISSION EXPIRES:
My Commission Expires Dec. 7, 1988

BEFORE THE COMMISSION ON NATURAL RESOURCES

MISSISSIPPI BUREAU OF POLLUTION CONTROL

VERSUS ADMIN. CASE NO. _____

VICKSBURG CHEMICAL COMPANY, A DIVISION
OF CEDAR CHEMICAL COMPANY

MEMORANDUM TO COMMISSIONERS

EDWIN LLOYD PITTMAN
ATTORNEY GENERAL
STATE OF MISSISSIPPI

J. ARTHUR PRESTAGE
SPECIAL ASSISTANT
ATTORNEY GENERAL

POST OFFICE BOX 220
JACKSON, MISSISSIPPI
TELEPHONE: (601) 359-3680

BEFORE THE COMMISSION ON NATURAL RESOURCES

MISSISSIPPI BUREAU OF POLLUTION CONTROL

VERSUS ADMIN. CASE NO. _____

VICKSBURG CHEMICAL COMPANY, A DIVISION
OF CEDAR CHEMICAL COMPANY

MEMORANDUM TO COMMISSIONERS

STATEMENT OF FACTS

During a period of time from November, 1980 until it ceased operation in 1982, Vicksburg Chemical Company manufactured toxaphene, a highly toxic pesticide which has since been banned from the market due to its adverse ecological and environmental effects. From the inception of the Facility's toxaphene production, Vicksburg Chemical Company has been regulated under the Resource Conservation and Recovery Act (RCRA) due to its production and/or storage of two listed hazardous wastes, namely, K098, untreated process wastewater from the production of toxaphene, and K041, wastewater treatment sludge from the production of toxaphene.

In the administrative hearing at bar, Vicksburg Chemical Company wishes to disregard its present RCRA regulation and discontinue the same in the future, alleging that the process stream and the treatment sludge generated at the facility is not that intended to be regulated under RCRA, and therefore RCRA regulation is not proper. The Bureau of Pollution Control, as well as the United States Environmental Protection Agency (USEPA) strongly disagree with

Vicksburg Chemical Company's allegations, and firmly believe that the process stream and the treatment sludge generated at Vicksburg Chemcial Company are exactly the hazardous wastes which EPA intended to regulate; therefore, regulation must be maintained.

ARGUMENT

Mississippi's Hazardous Waste Regulation 261.32 clearly shows that K098, untreated process wastewater from the production of toxaphene, and K041, wastewater treatment sludge from the production of toxaphene, are listed hazardous wastes, and therefore subject to regulation under RCRA. In fact, Vicksburg Chemical Company's own expert witness, in his oral testimony before the Commission, stated that, even though he felt that USEPA had drafted the listing regulations too hastily and that mistakes had been made, he agreed that Vicksburg Chemical Company was a regulated facility under the listings as they presently exist. Additional proof that USEPA intended that this facility and its process stream and sludge be regulated is easily found in the Listings Background Document prepared by USEPA. Page 5 of the Listings Background Document specifically includes wastes generated by the acid recovery system as being untreated process wastewater from the production of toxaphene. Under effluent guidelines and standard regulations, a process wastewater is any water which, during manufacturing or processing comes in direct contact with the results from the production or use of any material, intermediate product, finish product, or product. Surely this waste stream meets these requirements. (See affidavit of Matt Straus, Page 2, 3). Further, under RCRA, neutralization and

settling of waste streams are considered treatment. In the report "Wastewater Treatment Technology Documentation For Toxaphene Manufacture", it is indicated that the effluent from the toxaphene process at Vicksburg Chemical Company "is discharged to a final neutralization and settling pond on site." (See affidavit of Matt Straus, Page 4). Vicksburg Chemical Company has never disputed that their waste streams from the toxaphene facility were treated in the impoundment. Therefore, it is clear that the process waste stream and treatment sludge is indeed intended to be regulated under Part 261.32 of the Mississippi Hazardous Waste Regulations.

In the earlier hearing before the Commission on May 27, 1987, Vicksburg Chemical Company went to great lengths to display diagrams and flow charts of how the toxaphene production facility operated, arguing that the acid recovery system was separate and distinct from the toxaphene production. However, the listing language for K098 untreated process wastewater from the production of toxaphene and K041, wastewater treatment sludge from the production of toxaphene, does not limit itself to any particular stage in the production process; therefore, any wastewater generated by any of the steps in the toxaphene production process are covered by the listings. (See Affidavit of Matt Straus, Page 2).

During the course of the above referenced hearing, Vicksburg Chemical Company has argued that, if subjected to RCRA regulation, it would have to "close" the impoundment at Vicksburg Chemical Company and its beneficial use as a water shed, i. e. a "catch basin" for run off of leaks and spills of contaiminants, would

be lost. Officials of the Mississippi Bureau Pollution Control and EPA Region IV believe that options are available to Vicksburg Chemical Company which would meet the requirements of closure for purposes of regulation without necessitating actual closure of the impoundment. The Mississippi Bureau of Pollution Control is willing to assist Vicksburg Chemical Company in this endeavor. (See Affidavit of Sam Mabry, Page 3; Affidavit of Jim Scarbrough, Page 2).

Should the Commission allow Vicksburg Chemical Company to avoid RCRA regulation, Vicksburg Chemical Company's obligation to provide financial assurance (insurance) against possible spills or contamination of groundwater for the impoundment will be forfeited. This State would be adversely affected if it is saddled with the cost of an enviromental clean-up assuming Vicksburg Chemical Company's inability or unwillingness to do so.

Further, Vicksburg Chemical Company has argued that any toxaphene contamination from leaks or spills which entered the impoundment were de minimis losses (minor leaks or spills), and therefore exempt from regulation. In reviewing the de minimis loss provision of the Mississippi Hazardous Waste Regulations, cited at Part 261.33 (a)(2)(IV)(D), it is apparent that de minimis losses (i. e. spills and leaks) of commercial chemical products that are discharged to wastewaters <u>are not automatically considered hazardous wastes unless the wastewater is a listed hazardous waste</u>. Because the wastewater referred to within this memorandum is a <u>listed hazardous waste</u>, namely, KO98, the de minimis loss provision does not apply.

Vicksburg Chemical Company's objective throughout the course of this hearing has been to seek and obtain from this Commission a "de-listing" of the process waste water and treatment sludge at the Facility, thereby negating the necessity for RCRA regulation. After a review of the Mississippi Hazardous Waste Regulations, it is clear that Vicksburg Chemical Company has improperly brought this matter before the Commission. Part 260.22 of the Mississippi Hazardous Waste Regulations states that "any person seeking to exclude a waste at a particular generating facility from the hazardous waste listings in sub-part D of Part 261 may petition for a regulatory amendment..." The petition is to be filed with the Enviromental Protection Agency Administrator or his Designee, and must demonstrate to the Administrator's satisfaction that the waste produced by a particular generating facility does not meet any of the criteria under which the waste was listed as hazardous. Prior to "de-listing" the waste, the Administrator or his Designee will make an analysis of not only the listed wastes in a particular impoundment but other constituents in the empoundment as well. USEPA is understandably very careful in considering de-listing petitions due to the serious nature of the request and the adverse consequences which could rise if a particular facility is erroneously de-listed and contamination subsequently occurs. No state administrative body is given the authority to de-list; in fact, even officials at EPA Region 4 cannot hear a de-listing petition. Only the Administrator or his Disignee at USEPA Headquarters in Washington, D.C. may presently hear these petitions.

CONCLUSION

Vicksburg Chemical Company is and should continue to be regulated under RCRA as result of its generation of toxaphene process wastewater and treatment sludge during a period of time from November, 1982 until the facility ceased its toxaphene production process in 1982. Toxaphene contamination is still present in the impoundment; therefore potential for groundwater contamination or a "spill over" of the impoundment and subsequent run-off of a hazardous waste is a very real threat.

In order to better protect the health and welfare of the citizenry of this State, and by reason of the facts set forth hereinabove, the Mississippi Bureau of Pollution Control respectfully requests that Vicksburg Chemical Company's petition be denied.

Respectfully submitted,

J. ARTHUR PRESTAGE
SPECIAL ASSISTANT ATTORNEY GENERAL
ATTORNEY FOR:
MISSISSIPPI BUREAU OF POLLUTION CONTROL

OFFICE OF THE ATTORNEY GENERAL
POST OFFICE BOX 220
JACKSON, MISSISSIPPI 39205-0220
TELEPHONE: (601) 359-3680

CERTIFICATE OF SERVICE

I, J. Arthur Prestage, Attorney for Mississippi's Attorney General, do hereby certify that on this day I caused to be personally served a true and correct copy of Memorandum With Supporting Affidavits to William L. Smith, Esquire at Brunini, Grantham, Grower and Hughes, Post Office Drawer 119, Jackson, Mississippi 39205.

This the 23 day of June, 1987.

J. ARTHUR PRESTAGE
SPECIAL ASSISTANT
ATTORNEY GENERAL

AFFIDAVIT OF JAMES H. SCARBROUGH
WITNESS FOR MISSISSIPPI BUREAU OF POLLUTION CONTROL

STATE OF GEORGIA

COUNTY OF FULTON

Affiant, after having first been duly sworn, did state that the following facts are true and correct:

My name is James H. Scarbrough. I am Chief of the Residuals Management Branch of USEPA Region IV in Atlanta, Georgia. I have been employed in this capacity since November 1974.

I am familiar with Vicksburg Chemical Company and have read about its operations while producing toxaphene from 1980-1982. Based on what I have read and what my staff has told me, it is my professional opinion that untreated process wastewater (K098), and wastewater treatment sludge from the production of toxaphene (K041), are present at the facility. I base my opinion upon the written regulations concerning "listings", discussions with Matt Straus at USEPA in Washington, D.C., the Listings Background Document, and inspection reports prepared by my staff.

When determining whether a particular substance is listed, I often times consult with Matt Straus. I consider him to be most knowledgeable with regard to the listing of hazardous waste substances. Additionally, I read Listings Background Documents to obtain a better understanding for the basis of the listing. The Listing Background Document explains why EPA listed a particular substance. A Listings Background Document is prepared by EPA for each listed hazardous waste substance. A particular company which produces or stores listed hazardous waste substances does

MISSISSIPPI DEPARTMENT OF NATURAL RESOURCES
BUREAU OF POLLUTION CONTROL

HEARING BEFORE THE COMMISSION ON NATURAL RESOURCES
IN RE:

CEDAR CHEMICAL CORPORATION

Held in the offices of the Department of Natural Resources
2380 Highway 80 West, Jackson, Mississippi
Tuesday, May 27, 1987, beginning at 9:15 a.m.

APPEARANCES:

COL. CHARLIE BLALOCK - Hearing Officer
Executive Director
Department of Natural Resources

ALVA N. TEMPLE - Commission Chairman
JAKE HURDLE
ROBERT C. TRAVIS
THOMAS L. GOLDMAN
EARL F. BOYD

COMMISSION ON NATURAL RESOURCES

ART PRESTAGE, ESQUIRE
Special Assistant
Office of the Attorney General

REPRESENTING THE BUREAU OF POLLUTION CONTROL

ROBERT DAVID KAUFMAN, ESQUIRE
and
WILLIAM L. SMITH, ESQUIRE
Brunini, Grantham, Grower & Hewes
Post Office Drawer 119
Jackson, Mississippi 39205

and

ALLEN T. MALONE, ESQUIRE
Apperson, Crump, Duzane & Maxwell
100 North Main Building
Suite 2610
Memphis, Tennessee 38103

REPRESENTING CEDAR CHEMICAL CORPORATION

REPORTED BY: Ruth A. Blackledge
5350 Jamaica Drive
Jackson, Mississippi
956-6760

Court Reporters Supply House Style # 4-S

CONTENTS OF TESTIMONY

Style and Appearances..... 1

Opening Statements..... 2

Testimony of SONNY KING:

Direct Examination by Mr. Kaufman..... 18

Cross Examination by Mr. Prestage..... 38

Testimony of WILLIAM H. GASTROCK:

Direct Examination by Mr. Kaufman..... 45

Cross Examination by Mr. Prestage..... 49

Redirect Examination by Mr. Kaufman..... 50

Recross Examination by Mr. Prestage..... 51

Testimony of GARY DIETRICH:

Direct Examination by Mr. Malone..... 56

Cross Examination by Mr. Prestage..... 75

Commission Examination..... 87

Redirect Examination by Mr. Malone..... 91

Recross Examination by Mr. Prestage..... 93

Closing Remarks and Motion..... 94

Certificate of Court Reporter..... 100

Court Reporters Supply House Style # 4-S

EXHIBITS

Cedar Exhibit No. 12 - Affidavit with Samples..... 18

Cedar Exhibit No. 13 - Vicksburg Chemical Toxaphene..... 21
Production Schematic

Cedar Exhibit No. 14 - Schematic of Toxaphene..... 23
Emissions Control System

Cedar Exhibit No. 15 - Hercules' Production and..... 31
Waste Schematic for Toxaphene

Cedar Exhibit No. 16 - Hercules Toxaphene Production..... 33
Schematic

Cedar Exhibit No. 17 - Listing Background Document..... 35
Toxaphene Production (Two Pages)

Cedar Exhibit No. 18 - Listing Background Document..... 64
Toxaphene Production

Cedar Exhibit No. 19 - Wastewater Treatment Technology... 64
Documentation for Toxaphene
Manufacture

Court Reporters Supply House Style # 4-S

HEARING OFFICER: I am going to begin with a very brief statement to set the stage for the Commission following which I understand Cedar Chemical would like to make a statement and following that the State will make a brief opening statement; then Cedar will present the cause and evidence for this petition followed by the State. All witnesses will be sworn.

You probably recall the Commission members present here today. They're the same as when last you were here: Mr. Temple, Chairman; Mr. Hurdle from Holly Springs; Mr. Travis from Jackson; Mr. Goldman from Meridian, and Mr. Boyd from Tylertown.

Bill, would you identify the folks at your table with you, please.

MR. SMITH: Yes, sir. I'm Bill Smith along with David Kaufman. We're with the Brunini firm here. We're delighted to have Allen Malone with the Apperson, Crump firm in Memphis also representing Cedar Chemical.

HEARING OFFICER: And Mr. Prestage with Sam Mabry, who's at the table on behalf of the State.

I am going to make my statement right now. In 1986 Cedar Chemical, Vicksburg, filed a petition with the Commission contending that the company's surface impoundment is not properly designated as a hazardous waste facility and is not subject to the Hazardous Waste Regulations. Specif-

ically, the company argued that past use of the surface impoundment as a catchment basin for storage, treatment or disposal of spills in connection with production of pesticides at the Vicksburg plant constitutes de minimis losses. This matter was heard on September 16, 1986, where evidence was presented relating to the pesticide dinoseb (DNBP).

At its December 17, 1986, meeting the Commission ruled that the impoundment was not regulated for purposes of dinoseb. However, it determined that the question of whether it was regulated for purposes of other pesticides formerly manufactured at the plant--toxaphene--had not yet been determined.

The Commission on that date issued Order No. 1153-86 incorporating the ruling on dinoseb. The Order additionally provided that a subsequent hearing would be set to determine whether the surface impoundment is regulated because of toxaphene related wastes after the Bureau of Pollution Control staff and the company had developed their arguments. The purpose of this hearing today is to hear the arguments related to the toxaphene waste streams so that the Commission may make a determination as to whether the impoundment is covered under the hazardous waste regulatory programs.

I believe before you go ahead and make your statements, so we don't disrupt the proceedings, if we could have

all the witnesses that each side is going to use sworn now. Do you have them all here?

MR. SMITH: Yes, sir, all save one.

HEARING OFFICER: All right. We'll get him later.

MR. PRESTAGE: We have possibly two people coming in at ten o'clock that aren't here yet.

HEARING OFFICER: All right. Remind me they will have to be sworn.

[ALL PERSONS TO TESTIFY ARE SWORN BY THE COURT REPORTER.]

HEARING OFFICER: Mr. Smith, you may proceed.

MR. SMITH: I'm going to let Mr. Malone make our statement.

MR. MALONE: Mr. Chairman and members of the Commission: Col. Blalock's statement covered some of the points that I wanted to make, so this will not be long.

This case, as you know, was heard eight months ago. The case has been pending for about a year. We had hoped that the hearing last September would dispose of the issue of whether this pond is or is not a hazardous waste facility and therefore regulated under RCRA. It turned out that I guess that was round one, so we're in round two now.

I think it would be a good idea for me to take a couple of minutes and review how we got here and some of the terms we use just to-- I know you've heard them before, but

it's been eight months.

The complaint that was filed charges Cedar with violations of the Mississippi Hazardous Waste Management Regulations. We call them sometimes RCRA regulations; RCRA because the state regulations were lifted directly out of the federal code of regulations that were promulgated under RCRA--the Resource Conservation and Recovery Act. I want to emphasize however that what we are here today to do is to construe a state regulation, not a federal regulation, as adopted in the State of Mississippi.

The Bureau contended in its complaint and in its response to the company's motion to dismiss that the regulations are applicable in this particular case because of a pond which is located at the site, at the Vicksburg Chemical Company site. Now the Vicksburg site was acquired by Cedar last year; but this suit was filed shortly after the acquisition by Cedar of the site--formerly known as Vertac Chemical Corporation.

The pond we're talking about is a facility that is capable of handling three and a half to five million gallons of liquid, and it is an integral part of the operations of the plant at Vicksburg. We have referred to this and will probably today refer to this facility as a surface impoundment. It is basically three separate ponds that are connected.

The question that is put to the Commission is whether or not--and was put in fact last September--was whether or not the pond is a regulated unit, that is, a hazardous waste unit, and therefore subject to RCRA and therefore, I think is generally conceded, must be closed if it is because that's what the RCRA regulations would require.

As Colonel Blalock stated, the issue last time was dinoseb, whether or not dinoseb, a listed hazardous waste, had been introduced into this pond subsequent to the effective date of RCRA--the statute of RCRA, the regulations--and therefore must require regulation of the pond. The testimony was to the effect that the pond did receive these wastes, but because of the de minimis nature of the discharge that the pond need not be regulated because it was within what was called the de minimis rule, which we heard all about last September. Mr. Gary Dietrich, formerly Deputy Director with the EPA, was present and testified before this Commission at that time. That was his testimony. He's back today to testify again today.

I think it was clear to everybody by the end of that hearing--it seemed clear anyway--that in fact the de minimis rule was applicable. So it wasn't too long after the close of that hearing, but before the ruling from the Commission which came in December that the Bureau with--

prodded by EPA no doubt--began to further its investigation. It submitted a lengthy questionnaire to the Company asking about past practices, past operating practices, and waste discharges at the site. We carefully responded to that fully, completely and in a timely manner. We thought probably naively that this would facilitate the end of this proceeding.

At the same time or thereabouts the Bureau came back to the plant to take additional samples to subject the samples to additional analysis. They carried out that analysis. The principal objective there was to determine quantities of these hazardous wastes located in the sediment of the pond and to determine whether or not they would pass tests that--which if it didn't pass would establish that in fact the sediments were hazardous wastes all by themselves, because they are what they call an EP test, which if it had failed would have established that the sediment was a "characteristic" under the RCRA regulations and therefore a hazardous waste.

The test indicated that in fact the sediment passed; it was not subject to RCRA because of that test. So then they began to take a look at the responses to the questionnaire to try to determine if there was anything else about past practices at this plant that would constitute a discharge of hazardous wastes in the unit to the pond or

surface impoundment after November of 1980, which is the operative date.

So they began to--and when I say "they" I'm talking about the Bureau and EPA, too. They began to look at that and finally determined in April of this year in a letter from Mr. Mabry that it was their opinion that two hazardous wastes were in fact discharged. They both relate to the production of toxaphene. They're classified KO-98 and KO-41. You'll hear those classifications a lot today I suspect. KO-98 is designated in the regulations as processed wastewater from--untreated processed wastewater from the production of toxaphene. And KO-41 is called wastewater treatment sludge from production of toxaphene.

Now the specific claim regarding the KO-98, the processed wastewater, is that a scrubber water--I don't know whether you know what scrubber water is; but you'll hear proof about that today. Scrubber water from a HCL--that's hydrochloric acid or also called muriatic acid. That was generated--HCL being a by-product of the toxaphene production. It was reclaimed and sold as part of the process. Whether or not the scrubber water that was generated from reclaiming the hydrochloric acid was hazardous waste--the claim is that, yes, it's within the designation of KO-98. So that's an issue before the Commission today; whether or not the scrubber water that was generated at the Vicksburg

plant in fact is. There's no dispute that in very small quantities; namely, 200 gallons a day during the two years that we're talking about--two years, incidentally, being the period from November of '80 to October of '82 when the toxaphene production ceased forever; whether or not that quantity of scrubber water which was discharged to this three and a half to five million gallon pond is properly designated as hazardous waste under KO-98.

We don't think there is going to be any serious dispute about the facts in this case. It's more of a question of law, it seems to me. It's a matter of interpretation of the rules, the two listing rules, and interpretation of the background documents which you've got to look at to understand what the rules mean. I believe the Commission after hearing the evidence today will be convinced just by looking at the background document on its face that it doesn't make any sense to interpret the listings that we're talking about as broadly as the Bureau is suggesting they be interpreted.

Now we're going to show--I think this is the key to the evidence today--that the rules--we're talking of two rules, the listing rules KO-98 and KO-41, hazardous waste listings, came about not because of the Vicksburg plant but because of a plant down in Brunswick, Georgia, that was operated by Hercules years ago. It was closed down years

ago. But at the time the rule was adopted it was operating, and the proof is going to show that it was that plant that brought about this rule. It had nothing to do with the Vicksburg plant. It doesn't make any sense to apply the rules to the Vicksburg plant.

That's what the proof is going to show. I have to say this whole matter is a little strange and frustrating to me and certainly to my client, not just because we're having to come back and relitigate what we thought we had litigated before and had gotten out of the way, but because it really to us makes no sense that the Bureau would want to bring this pond under RCRA and therefore cause it to be closed. We believe that the proof is going to show, and we're convinced we believe the Bureau shares this opinion--at least some of the folks in the Bureau--that this pond serves a very valuable function from an environmental standpoint.

The pond--the Commission heard testimony on this last time. The pond is able to capture surface water runoff from surrounding acreage around the pond in the plant. The runoff quite clearly carries with it trace contaminants of pesticides that have been produced at that plant going back to the days of (Dwarf and Amax) 30 years ago. Without the pond there to capture it, without the ability of the company then to treat the influent to the pond and then discharge it under a NPDES permit, which it is doing and intends to con-

tinue to do, this surface water runoff will not be controlled. It will go to Hennesseys Bayou and to the other bayous that are on the plant site and will not be treated. So we believe that pond serves that very valuable function. If the pond had to be closed the proof is going to show that the costs will be substantial, and the proof I submit to you will show to you this anyway will--the fact that the costs will exceed the company's ability to justify that kind of expense involved, particularly in light of what kind of operations it presently has and the revenues from the plant.

We don't believe that kind of monumental effort is required. We believe it makes a heck of a lot more sense to let the pond protect the surface water runoff. We do not believe the proof will show that this pond poses any threat to the environment in terms of surface groundwater, which if there is any concern that's what it would be. The company has implemented a groundwater monitoring program. The company is committed to keep that program in place to continue to monitor; to continue to draw samples; analyze the samples; report the results to the Bureau; if any corrective action is required, to work with the Bureau. I believe the Bureau will have to concede that it does not need RCRA to regulate this pond. The pond can be regulated with or without RCRA in a manner that will be safe for the--protect the environment. That's what it's all about, I thought.

Today what we're asking the Commission to do is to interpret the state regulations in the manner that I've just described, to find that they are limited to the wastes that were generated down in Brunswick, Georgia, and that they have no application to the Vicksburg plant, and to go a step further, in fact, amend the regulations to so state. We believe that the proof that is put into evidence today will support that action. Thank you very much.

HEARING OFFICER: Mr. Prestage.

MR. PRESTAGE: Gentlemen, I'll be as brief as possible.

Cedar has been regulated as a storer of hazardous waste since 1980. That's when the regulation went into effect. Through the course from 1980 to 1982 I believe there was some 7500 tons of toxaphene that was produced at this facility.

Mr. Malone has spoken to you about the basis for the regulations--the KO-98 and the KO-41. The KO-98--to go over this again because this is going to be important. The KO-98 is the untreated process wastewater from the production of toxaphene. That is presently listed as a hazardous waste under the regulations. The KO-41 is the wastewater treatment sludge in the impoundment in the production of toxaphene. That also is a listed hazardous waste at this time under the regulations.

As Mr. Malone correctly pointed out, our state regulations mirror the federal regulations. We have adopted those regulations, and there's a reason for that. We have to maintain equivalent regulations with the Federal Government or we'll lose our privacy which is in effect our ability to run our hazardous waste enforcement program.

Mr. Malone has stated that the de minimis rule applied to dinoseb. I'm not arguing that. I think dinoseb is not at issue here today. But we will show through testimony that the de minimis rule does not apply at all in this situation, because what we have is two--the two processes. The wastewater stream and also the sludge in the impoundment are already listed as hazardous wastes. They've been that way in the regulations since 1980. The de minimis rule does nothing to eradicate that on the list. They're still hazardous wastes; and therefore any application of the de minimis rule as regards to spills or leaks going into the impoundment would keep this from being a hazardous waste just does not apply.

We're going to be presenting testimony today from Sam Mabry. He's the Chief of the Division of Solid Waste here at the Bureau. We'll also be presenting testimony by Matt Strauss. He is Chief of the Waste Characterization Branch, Office of Solid Waste, the headquarters in Washington, D.C., with EPA. Also Jim Scarborough, Chief of

the Residuals Management Branch of EPA Region IV in Atlanta. All these gentlemen are going to tell you today that the correct interpretation of the rules and the regulations is that this impoundment is indeed and should be regulated as a hazardous waste facility. That is their position and that is our position as well.

There's going to be some evidence concerning the levels of toxaphene in the impoundment. I suppose that these gentlemen are going to be making quite a bit of testimony regarding the levels of toxaphene or the concentrations. Even though that does have its importance we think strictly from a regulatory standpoint it should not apply. The reason being is we have these listed wastes that are going into the impoundment; we have these sludges that are also listed wastes which are already in the impoundment. I don't think there's going to be any dispute about is a level of toxaphene present; therefore, it should be regulated. I don't think that even though the level of the toxaphene does have its purpose and is important in a way, it certainly is not conclusively that there should not be any regulations.

One other point that I'd like to bring out at this time is that the regulations, both federal and the state regulations which we have adopted, contemplated controversies such as this. When a company feels like they've been wronged, when a company feels like that their particular

process waste stream or whatever should not apply to this list of hazardous wastes, they have a remedy. They can go through a delisting procedure. This is spelled out in our state regs.; it's spelled out in our federal regs. They are to go through headquarters in Washington, D.C.--EPA; file a delisting petition; put on their evidence. And we would contend that the levels of toxaphene would be relevant there. Obviously, if you can show these folks in Washington that the levels are low or whatever, that might go to whether or not they're going to delist this particular facility from the hazardous waste regulations or they might even want to modify the regulations.

But the point is that this is not the proper forum at all for this. They're asking you to in effect delist a hazardous waste which the federal government has listed. I don't think that you gentlemen have that authority, quite honestly. I'm being respectful in saying that. But I do believe that this process should have been done through the delisting procedure as accorded by regulations; and this is something they are totally bypassing. They're asking you to do it for them without them having to go through the process. It's unfair to any other company that has gone through this delisting process to do otherwise.

I think from a regulatory standpoint the issues are clear. I think our testimony will bring that out. We

ask you to rule that these regulations do in effect control here today, and to ask these people to go through the proper procedure, to go file their delisting petition. We informed them in a letter that that's what they should do. That is the proper procedure. But they have chosen to come before you today. So we ask that once you've listened to this testimony that you would indeed consider this to be a regulated source and allow them to go through the proper procedure that's necessary. Thank you very much.

HEARING OFFICER: Bill, do you want to proceed with your witnesses?

MR. SMITH: Yes, sir. At this time we call Sonny King.

COMMISSIONER GOLDMAN: May I ask a question?

HEARING OFFICER: Yes, sir.

COMMISSIONER GOLDMAN: Is there any way you can stipulate the levels of toxaphene? Is there any dispute about that?

MR. SMITH: There is a dispute about one particular sample that was taken; otherwise, we would stipulate to levels. There were 19 samples taken. We would stipulate to 18 of them.

COMMISSIONER GOLDMAN: I think it would be wise to do that.

MR. SMITH: In fact, we would be willing to stipu-

late that rather than putting in the 19 samples, if this would overcome the disagreement, that an average composite of all 19 samples be taken to be agreed upon as the level of toxaphene in the pond.

MR. PRESTAGE: We can't agree with that. We certainly stipulate to the others, but not to the high sample that we got. That particular sample was taken from the point of the discharge of the processed wastewater into the impoundment. It wouldn't make sense to combine those levels.

COMMISSIONER GOLDMAN: Well, can't you stipulate as to the finding of the 18 samples?

MR. MALONE: We have some very minor differences. Their chemist did one analysis; ours did a different--the same analysis on a split sample. The differences are not---

COMMISSIONER GOLDMAN: Y'all are going to bore us to death then.

[COUNSEL CONFERRING]

HEARING OFFICER: Do you reach an agreement here?

MR. PRESTAGE: I don't believe we can stipulate to the high sample. We will stipulate to the others. But as I said, because that particular sample was taken right where the affluent came into the pond we don't feel like it makes sense to combine all those samples together.

MR. SMITH: I think what we might be able to do,

Mr. Goldman, that would take up a lot of time is we can stipulate that whatever sample results they got, they got, and put that in the record, and the samples were properly taken and analyzed to the best of their ability, and we would stipulate the same to ours; then we can just stick the results in the record and not have to put a bunch of chemists on the stand.

MR. PRESTAGE: That's fine.

HEARING OFFICER: All right. You got that agreement?

MR. SMITH: Yes, sir.

HEARING OFFICER: Enter those in the record.

[AFFIDAVIT OF CHEMIST WITH ATTACHMENTS MARKED EXHIBIT 12, APPENDED HERETO.]

JAMES D. (SONNY) KING,

having been duly sworn by the court reporter, was examined and testified as follows, to-wit:

DIRECT EXAMINATION

BY MR. KAUFMAN:

Q. Mr. King, state your full name for the record.

A. James D. King.

Q. You previously testified in this proceeding back in September?

A. That's correct.

Q. I don't want to go back through your long employment history with the Company, but I want to touch on the highlights. You've been employed there for over 25 years?

A. Twenty-five years, yes.

Q. And you were production supervisor in 1972?

A. I started in '72 as a production supervisor; as a production superintendent; two years as a maintenance superintendent, and for the last four years as production manager.

Q. That's your current position?

A. Right.

Q. Did your responsibilities during this time period, 1972 to date, include supervision of the toxaphene manufacturing process?

A. Yes, it did.

Q. Before we get into this too far would you explain for what purposes the toxaphene was used.

A. Toxaphene is a pesticide that's basically used for boll weevils and this sort of thing in the cotton production. A small amount is used as a cattle dip and different things of that nature.

Q. What does it look like? What is the consistency?

A. Toxaphene is a very thick--maybe we would say a very thick molasses type. Our toxaphene was of a honey color and maybe the texture of honey. Maybe that would be a

better indication.

Q. How would you define this product?

A. The product has to be cut with some type solid, and the biggest part of it is sprayed through aerial applications or ground spray equipment.

Q. During what period of time did Vertac manufacture toxaphene?

A. We started manufacturing toxaphene I'd say early '73. We stopped production in October or November of '82.

Q. So no toxaphene has been manufactured for a little less than five years?

A. None whatsoever.

Q. Do you have any present plans to manufacture it in the future?

A. No, sir. Part of the plant has been dismantled.

Q. Can you give us an idea, a ballpark figure, of what toxaphene costs per gallon, per 55-gallon drum? Anything you can give us on that.

A. Well, toxaphene is I think at this time around 75 cents a pound. It weighs approximately 13 1/2 pounds per gallon. So we would be in the--drumwise, $550 to $600.

Q. Have you prepared a schematic which depicts the toxaphene manufacturing process that you utilized in Vicksburg?

A. Yes, I have.

MR. KAUFMAN: I'd like to have marked as Cedar's-- I guess we would number these sequentially from last year's. The last exhibit number I have is No. 11.

HEARING OFFICER: Okay. We'll begin with No. 12.

[Reporter's note: Samples marked Exhibit 12.]

[SCHEMATIC DEPICTING TOXAPHENE PRODUCTION MARKED EXHIBIT NO. 13, APPENDED HERETO.]

MR. PRESTAGE: We've got a schematic, a big blown-up version of this, if y'all would like to have it.

BY MR. KAUFMAN:

Q. Is this the schematic you were referring to which depicts your operation?

A. Yes, it is.

Q. Was the production, manufacture of toxaphene, basically a batch process? By that I mean that you mix some chemicals together under certain conditions to produce this product?

A. Yes, sir, it was a batch operation.

Q. I see up here "Chlorine" and "Camphene." Were these the two chemicals that were mixed together to produce toxaphene?

A. That's correct.

Q. I see in the block "Chlorinator." What exactly was the chlorinator?

A. Okay. The chlorinator was a 2,000-gallon glass-lined steel reactor where we charged the camphene into this reactor and added chlorine gas to chlorinate it into a toxaphene solution.

Q. Okay. Where did you get the chlorine that you used in this process?

A. We manufacture chlorine at our north facility.

Q. Where did you get the camphene that was used in this process?

A. It was purchased from the outside.

Q. How is camphene made? What is it?

A. Camphene is, I guess we'd say, a pine tree resin. It comes from the pine tree.

Q. What happens when you mix this camphene and this chlorine in this reactor? What's produced?

A. Okay. When we would mix the chlorine with the camphene we produced the toxaphene, and we also have a by-product of ACL muriatic acid that comes off the reactor that we recover.

Q. I want to set aside for the moment the toxaphene stream and focus on the muriatic acid stream.

A. Okay.

Q. Would you go to the easel and point out exactly where this hydrochloric gas stream goes from the chlorinator, or reactor as you call it.

A. Okay. [GOES TO EASEL] The HCL came off the chlorinator as a gas. It came through an absorption column, an absorption column of which we had three of them. We had a small glass column; we had what we call a primary absorption column, and a secondary column. In this column you have a gas flow flowing upward while the water flows downward that absorbs the HCL gas into 32 per cent muriatic acid.

Q. Have you prepared a schematic which elaborates on this hydrochloric acid system?

A. Yes.

MR. KAUFMAN: I would like to have identified as the next exhibit number a one-page schematic entitled "Toxaphene Emissions Control System."

[SAID DOCUMENT MARKED EXHIBIT NO. 14, APPENDED HERETO.]

MR. KAUFMAN: I'd like to place a blown-up version of that on the easel.

BY MR. KAUFMAN:

Q. We were talking about where this hydrochloric acid stream goes. Would you show on exhibit--we can tie Exhibit 14 to Exhibit 13. Would the reactor on Exhibit 14 be the same thing as the chlorinator here?

A. That's correct.

Q. Okay. And then I see an absorber and a scrubber on Cedar Exhibit No. 13. Those are also depicted on Exhibit

No. 14?

A. Right. This is a little glass exchanger that we had before our primary absorber. The gas came into it and out of it into the secondary absorber. Out of the secondary we went into the caustic scrubber. The material that went to the caustic scrubber was only the HCL that we couldn't absorb into the absorber, which would be a small amount. In the caustic storage tank we had a 15 to 18 per cent caustic solution that we circulated through the scrubber continually. This was about a 200-gallon storage tank. When the pH of the caustic got down to 1-1/2 or 2 per cent we dumped the tank and recharged it.

Q. Okay. Is the hydrochloric acid which flowed from the reactor through the glass heat exchanger into the absorber a gas or a liquid?

A. This was a gas stream.

Q. Is it gas all the way through?

A. Yes. Anything that would come over would be a gas.

Q. I note an arrow off of the hydrochloric acid absorber which shows 32 per cent HCL to storage. What does that represent?

A. Okay. The HCL is the recovery of muriatic acid--32 per cent--that we sold to a company by the name of Reagent Chemical. I think their headquarters is in

Beaumont, Texas.

Q. What did Reagent do with the hydrochloric acid it bought from you?

A. Reagent bought the acid from us and transported it and they used it in oil well drillings.

Q. Was there any toxaphene in the hydrochloric acid that was sold to Reagent?

A. No.

Q. How did you know that?

A. They couldn't have bought the acid from us if it had toxaphene or any other impurities in it.

Q. In this last storage tank which is shown on Exhibit No. 14, what did you say ultimately winds up in that?

A. In this storage tank?

Q. Yes, sir.

A. Okay. There's about 200 gallons of a 15 to 18 per cent caustic solution, and it just neutralizes the HCL that we don't take out with the absorbers.

Q. Is there any toxaphene in that storage tank?

A. No, sir.

Q. And the contents of that storage tank ultimately goes to the pond?

A. That's correct.

Q. Is this entire process here self-contained and isolated from the rest of the manufacturing facilities at

your plant? By that I mean the reactor---

A. The reactor is all the way over. I can't show you on that one; but this part is the tank. [INDICATING]

Q. So what would happen if you had any drips, leaks or spills with anything in this process?

A. They would be picked up and disposed of.

Q. Does the toxaphene flow as a liquid?

A. No. Toxaphene is very gummy. It's more of a molasses type.

Q. If you had a spill, dribble or whatever in this process how would you pick up the toxaphene? Could you vacuum it up?

A. No. You'd have to put down cement or pour a solid or something of that nature and shovel it up.

Q. Shovel it up. Okay. I'm going to indicate on Exhibit No. 13 where--or that part of this hydrochloric acid gas system that is self-contained. Why don't you do it? Just show me the--leaving from the chlorinator--is also contained. Show me what part of this is self-contained.

A. You don't mind me marking on it?

HEARING OFFICER: No. Go ahead.

A. Okay. It's like this. [SO INDICATING]

Q. I now want to focus---

COMMISSIONER TRAVIS: I would like to see what he's marked, if you don't mind.

MR. KAUFMAN: Certainly.

[OFF THE RECORD]

HEARING OFFICER: Go ahead.

BY MR. KAUFMAN:

Q. We followed the hydrochloric acid stream, and I'm now going to follow the toxaphene stream out of the container. You show in a box a stripper box. What occurs in the stripper area?

A. In the stripper area the remaining HCL is stripped from the product. When the HCL is stripped from the product the--100 per cent toxaphene is very hard to pump. It's hard to move and it's very hard to handle. So we added a 10 per cent solvent to the toxaphene and agitated it to get it in a liquid that we could transfer by pumps to other areas of the plant.

Q. And I see a line going back to the--from the stripper back to solvent and in the chlorinator. What does that represent?

A. That's the HCL solvent that would be left in the toxaphene that we would remove before we added our solvent to the 100 per cent tox.

Q. Okay. I now want to move to outside of that containment area and follow the stream of toxaphene. You show some blocks that have 30,000 gallon storage tanks. What does all of that represent?

A. Okay. We left the plant. The storage tanks were probably 200 feet from the toxaphene unit itself. From the toxaphene unit to the storage tank, that area was not contained. It went through the--we had four 30,000 gallon storage tanks. They had a set of pumps for those tanks. Those pumps pumped the material up to the loading dock that was probably another 100 feet from the--maybe further than that; maybe 150 feet from the tox. storage tanks to where it was loaded. Probably 60 per cent of it was loaded in bulk trucks and the other 40 per cent was in 55-gallon drums.

Q. Could you have drips, leaks and spills of the finished product--toxaphene--in these areas that I'm referring to, the storage tank areas and these pumping areas?

A. Yes, sir. We had some flange leaks and pump packing leaks and we had some leaks up where we loaded our trucks just from hoses dripping or whatever.

Q. Okay. How much product are you talking about when you talk about a leak or a spill?

A. It could be half a gallon or a gallon. And we did have--at one time we had this line leaving the plant right here. We had a pretty good leak develop in that line. We lost a flange in that line.

Q. What happened to that spill?

A. We had to clean it up. We cleaned the soil and everything around, you know, that area.

Q. Was it carted off?

A. Yes.

Q. It did not go to the surface impoundment?

A. No. We sent it off.

Q. In 1980--after. In this period after November 1980 was the drum building area self-contained?

A. Yes, after about '78 or '79.

Q. Was it connected to the main sewer system of the plant which led to the surface impoundment?

A. After '78?

Q. After 1980.

A. No, it wasn't.

Q. If you did have a leak or a spill of the product you of course lost that value of that product: right?

A. You're right. We lost the value of it; but the value of the product is not--it's probably a fourth of the cost of what it cost us to pick it up and send it off-site to dispose of it.

Q. What are these other costs you're referring to?

A. Well, it's the labor to clean the stuff up, to cover all the gloves and equipment the people use when they pick it up.

Q. We talked about what would happen if you had a leak or a spill or a drip in this area. You told us it would be picked up and disposed of.

A. That area is contained.

Q. Contained. Do you have the plant operator right here at the chlorinator?

A. I have the plant operator right there in the plant.

Q. Would he observe any leaks or spills or drips from the reaction process?

A. Yes.

Q. Now when Vertac first manufactured toxaphene in 1972 were there any other companies manufacturing toxaphene?

A. To the best of my knowledge at that time there was probably two. Hercules was probably one and Riverside might have been producing a small amount.

Q. But the predominant manufacturer was Hercules?

A. Hercules.

Q. What motivated Vertac to enter into the toxaphene manufacturing business? How did you think you could compete with Hercules?

A. Well, at that time we had a research chemist by the name of Mike Valotee [Phonetic] that had changed the process quite a bit on toxaphene. We thought we could produce a much better product than they were, which in fact we did.

Q. And are you familiar with the process that was utilized by Hercules?

A. Yes.

Q. Have you drawn up a schematic of their process?

A. Yes.

MR. KAUFMAN: I would like to have marked as the next exhibit a page out of the Listing Background Document for Toxaphene Production which is entitled "Hercules' Production and Waste Schematic for Toxaphene."

[SAID DOCUMENT MARKED EXHIBIT NO. 15, APPENDED HERETO.]

BY MR. KAUFMAN:

Q. I'm handing you Cedar Chemical Exhibit No. 15. Is that the schematic you were talking about?

A. Yes, sir.

Q. I would like to put on the easel a blown-up version of that exhibit. [SO DOES]

What I would like for you to do is to point out to the Commission the differences between the Hercules' manufacturing production process for toxaphene, as it's depicted on this exhibit, from your process.

A. Okay. One of the first things we wanted to get away from when we thought about producing toxaphene was this section right here. So we did not have the-- We didn't start with the pine stumps to remove the camphene. We purchased the camphene from a supplier.

Q. So Hercules was making its own camphene.

A. Hercules was making its own.

Q. I'm going to circle in red and put a one up here as to one difference, and this is the production of camphene, or the manufacturing of camphene, by Hercules. In other words, you bought your camphene.

A. We bought our camphene. The next difference that they had from what we were doing is we recovered all of our HCL that we could recover because we had a market for it. They used limestone and lime in the two separate scrubbers because they didn't have a market for all of the HCL; so they were just taking and neutralizing some of the HCL because they couldn't get rid of all of it.

Q. Okay. I'm going to circle in red and put a number two beside the arrow going back to the neutralizer. That reflects what you've just described?

A. Right. Which this give them solid waste out of their scrubber neutralization system of which we had none, no solid waste.

Q. I notice in here an arrow out of the chlorinator that has "spills, leaks, washdowns." Did you have any washdown processing chlorinator at the plant?

A. No. The only time we washed down a chlorinator was if we was going to change them out--had the maintenance working on them or something of that nature. Again, our product camphene was completely clear. It almost looked like--it was a light water color. We produced our own chlo-

rine, which is 99.9 per cent pure; so we had nothing in our chlorinator to wash out. We never had any.

Q. I'm going to circle "washdowns" and put a number three there to indicate another difference.

A. The next difference is that they made a dry formulation. We never made a dry formulation.

Q. Does that exhibit reflect what you believe to be their entire toxaphene manufacturing process?

A. No, sir, it doesn't. It reflects what they show, but it doesn't reflect what we understood was there.

Q. Did you find another document of Hercules in the EPA documents that show their entire manufacturing operation?

A. Yes.

MR. KAUFMAN: I would like to have identified as Cedar's next exhibit another one-page schematic entitled "Hercules Toxaphene Production Schematic."

[SAID DOCUMENT MARKED EXHIBIT NO. 16, APPENDED HERETO.]

MR. KAUFMAN: I would like to place on the easel a blown-up version of that. [SO DOES]

BY MR. KAUFMAN:

Q. I would like for you to point out the difference between Exhibit 15 and 16.

A. Okay. The only difference between 15 and 16 is

when they came out of that chlorinator with the toxaphene solution, since it was dirty and it had particles in the camphene that weren't completely removed, they chlorinated those particles. So when they finished with the toxaphene they had to filter them out in some form, because this stuff is going to be sprayed with a aerial applicator or a ground rig and it will stop the nozzle up; so they had to take it out somewhere. So they took it out through a filter. Then they took this solid from this stripper, washed it down as much as they could from the filtering system. And it looks like they went to solid waste with whatever remained. I don't have any idea what would remain.

Q. Okay. So this part of the process that I'm putting a red square around was something that was in their process that was not reflected in the listing background document; correct?

A. That's correct. The other thing I might add is we didn't have any filter. We never filtered our finished toxaphene in no form. It was probably the only product we ever made there that we didn't have to filter. There wasn't anything in it. It was clean.

Q. Okay. So you didn't have this process.

A. None whatsoever.

Q. And you didn't have processes one-two-three and four which are shown on Cedar Exhibit No. 15?

A. No.

Q. I'm going to put a five on there. [SO DOES] Are you familiar with the listing background document for toxaphene production?

A. Yes.

MR. KAUFMAN: I have two pages that I think we can make as one exhibit. And this would be Cedar Chemical Exhibit No. 17?

HEARING OFFICER: No. 17. That's correct.

[DOCUMENT ENTITLED "LISTING BACKGROUND DOCUMENT TOXAPHENE PRODUCTION" MARKED EXHIBIT NO. 17, APPENDED HERETO.]

BY MR. KAUFMAN:

Q. Do you recognize this as part of the listing background document for toxaphene production?

A. Yes.

Q. You'll note--and I've highlighted--some language under the paragraph headed "I. Summary of Basis for Listing". It says, "The production of toxaphene, a chlorinated hydrocarbon pesticide, results in the generation of process wastewater containing heavily diluted concentrations of toxaphene, and wastewater treatment sludges that contain approximately one per cent of toxaphene by weight." Mr. King, does that describe your toxaphene manufacturing pro-

cess at the Vertac facility?

A. No, sir.

Q. Looking down in the numbered paragraphs, particularly No. 2, it says, "Approximately 7 tons of wastewater treatment sludge containing about 140 lbs. of toxaphene are generated per production day." Does that describe the toxaphene manufacturing process that was utilized by Vertac?

A. No, sir. We didn't have any.

Q. Looking back to the schematics of the Hercules production process would you tell the Commission what you believe the source of that level of toxaphene and treatment sludge was.

A. Okay. The biggest part, I think, of the 7 tons came primarily from the limestone neutralization. They had a lot of lime and limestone left over from their neutralization process, and with this material over here they had washdown spills from the chlorination area; plus they had the cake from their filter and their filter wash that went to solid waste.

Q. You had neither of these processes?

A. We had neither of those.

Q. Did Vertac ever intentionally discard toxaphene into the surface impoundment?

A. No, sir.

Q. Now there are, as counsel has indicated, some

traces of toxaphene in the pond. How did that get there?

A. We certainly--it's sad to say, but we certainly had spills and leaks in the plant. We ran the plant for like 9-1/2 to 10 years. We produced probably 60 to 70 million pounds of the product, and in handling 60 to 70 million pounds in this length of them we had spills. I might add, this area--anywhere we would have a leak or a spill it goes to this impoundment, or pond or whatever we want to call it. It's a large area. I'm not sure of the acreage. It's probably 12, 15 or 18 acres that's directly in the toxaphene plant area. We had a couple of other plants in this area that we produced some pesticides and some herbicides, and all this watershed goes to this one pond. There's no place else for it to go. If it doesn't go to the pond, it goes to the bayou. It's not contained.

Q. You're referring to the spills and leaks which occur outside the containment area.

A. That's correct.

Q. And the ones that occurred outside of the containment area, were the ones you noted occurred in the handling of the treated product in the storage tanks and pumping areas onto truck loadings?

A. That's correct.

Q. And the spills, leaks, et cetera, that occurred in the drumming building area after 1980 were contained. They

didn't get to the surface impoundment.

A. After 1980 that's correct.

Q. What uses are commonly being made of the surface impoundment?

A. It collects any runoff from the process area of not only the toxaphene plant, the other pesticide plants and herbicide plants we have in that area, along with it collects the water from our north facility where we make our chlorine and potassium nitrate.

Q. Will it adversely affect your operations to close the pond?

A. Yes, sir, it will.

MR. KAUFMAN: We tender the witness for cross examination.

CROSS EXAMINATION

BY MR. PRESTAGE:

Q. Mr. King, I believe you said that the impoundment has not received toxaphene processed wastewater for five years; is that right? Excuse me, since 1982. Is that correct?

A. What are you called processed wastewater? I'm misunderstanding your question.

Q. Okay. The affluent from the process streams goes directly into the impoundment. What do you have going into the impoundment at this time?

A. Okay. Are you talking about the scrubber water?

Q. Yeah, let's talk about the scrubber water.

A. Okay. The scrubber water goes to the impoundment.

Q. Even today?

A. Well, up until 1982 when we stopped manufacturing.

Q. So that's been five years ago, and I understand there's still levels of contamination in the impoundment. Is that correct?

A. I can't question that. It'd have to be--I really don't even know what the levels are.

Q. Okay. Isn't it true that the scrubber water was part of the toxaphene process?

A. I'm not sure what you would--if you could say it was part of the toxaphene process. It was part of recovering the HCL from the tox. process.

Q. You could not have had one process without the other, could you? In other words, you can't have the acid recovery process without the toxaphene process, without the manufacturing and production of toxaphene.

A. I'm sure we could. It wouldn't be economically feasible to. But you can make muriatic acid without producing toxaphene, sir.

Q. You had stated earlier that no toxaphene was in the scrubber water, I believe, that went into the impoundment. Did you make that statement?

A. Yes, sir.

Q. What basis do you have for that?

A. Again, I would have to rely on our friendly lab chemist that analyzed the stuff and it was below---

Q. So you really don't know what---

A. As far as me personally, no, I don't know.

Q. Obviously it came from some source; right?

A. Yes, sir.

Q. Into the impoundment.

A. Sure.

Q. Are you familiar with toxaphene, the nature of toxaphene? What I mean by that is, is it a very toxic substance? Do you know?

A. No, sir. I know that it's toxic. I suspect there are some chemicals that's much worse and some not as bad. Probably a mid point I would say.

Q. Do you know it's been listed as a known carcinogen?

A. Sure.

Q. Do you know it's high on--can cause mutation in genes if it's ingested?

A. Yes.

Q. Do you know that it bioaccumulates?

A. Sure.

Q. Explain to the board what that means.

A. The best I know, it means you can accumulate it in your system, or you don't get rid of it once you have.

Q. Would you say that toxaphene is a highly persistent substance?

A. I'm not sure I get the meaning.

Q. How long does toxaphene last? What kind of lifetime can you expect for a substance like that? Does it break down quickly?

A. From what I have read--and this is just what I've read from different areas--that it sticks around quite a while. That's the reason it's banned and we can't use it anymore. That's the reason it's in our lakes in the whole Delta area where I go to fish, and I can't fish anymore because of that.

Q. You've talked about the background listing document. I assume that you've read that document.

A. Portions of it. I don't know if I've completely read the whole document.

Q. Did you read the portion regarding the extreme toxicity of toxaphene?

A. Um-hum.

Q. Okay. Did you read about the adverse ecological effects that toxaphene could have?

A. Sure.

Q. Do you know the basis for the background listing

document? Do you know what it is? Do you have any knowledge with regard to that; what the purpose of the background listing document is for?

A. No, unh-unh.

Q. Tell the Commission why you stopped manufacturing toxaphene in 1982.

A. I'm not sure if I can answer that. With all honesty, I'm really not sure of it. The reason I quit manufacturing it is because my plant manager said that we didn't want to produce it anymore. [LAUGHTER] I really can't answer that.

Q. But you do know that it's been banned?

A. Yes, sir, I know it's been banned.

Q. In the background listing document did you read the section which more or less referred to Vertac Chemical Company? You don't deny that the background listing document doesn't speak to the Vertac chemical process also, do you?

A. I'm not sure that-- I couldn't tell by reading it if it directly was referring to us or simply referring to someone else. Due to the amount of sludge and stuff that was listed in there, it didn't appear that it came from us. I'm sure that it did pertain to us, you know. It's obvious. You sent it to us.

Q. And you don't deny that Vertac Chemical Company

was specifically mentioned in the background listing document?

A. No, I don't deny it.

Q. And you don't deny that the processes from the two facilities were mentioned in the background listing document?

A. No, I don't deny it.

Q. So in reality you can't say that the EPA, when they came out with this background listing document, referred only to Hercules. You can't say that.

MR. KAUFMAN: Counsel, I don't think that's what he said. He testified that---

MR. PRESTAGE: Well, let him testify.

MR. KAUFMAN: ---the chlorinator did not describe his process.

HEARING OFFICER: I think the testimony was clear in that regard. That's what he testified to.

MR. PRESTAGE: Just a moment.

[OFF THE RECORD]

BY MR. PRESTAGE:

Q. I believe you testified earlier that because of spills and leaks possibly some of the toxaphene had gotten into the impoundment there from that source; is that correct? Is that what you stated?

A. Outside of this area of the plant?

Q. Right.

A. Yes, sir, that's correct.

Q. Where would it have entered the impoundment? Do you know?

A. It would have entered in--all the runoff enters the impoundment. There's about a 18- or 20-inch pipe that leads under the Illinois Central Railroad directly to our impoundment. It's only entered through the pipe.

Q. Okay. The area which you said was contained, if you would, point to that again.

A. The area with the---

Q. Right. I believe that's what you testified to was contained.

A. Yes, sir.

Q. What do you mean by contained?

A. It had about an 18-inch concrete dike that enclosed this area.

Q. Okay. It had to go somewhere. Where did it go?

A. We had to pick it up with a shovel and sand-- We had to put sand or oil solvent or something of that nature to pick the material up and put it in drums and ship it off-site for disposal.

MR. PRESTAGE: I have no further questions of this witness.

HEARING OFFICER: Does the Commission have any

questions? Do you have any redirect?

MR. SMITH: No, sir. It if please the Commission, Mr. King has been a little under the weather, and we kind of drug him over here. We'd like to excuse him.

HEARING OFFICER: Does the Commission have any objection to that? You're excused, Mr. King. We appreciate it.

[WITNESS EXCUSED AND A FIVE-MINUTE RECESS WAS TAKEN.]

WILLIAM H. GASTROCK,

having been duly sworn by the court reporter, was examined and testified as follows, to-wit:

DIRECT EXAMINATION

BY MR. KAUFMAN:

Q. Mr. Gastrock, would you please state your full name for the record.

A. William H. Gastrock.

Q. And by whom are you employed and in what capacity?

A. By Cedar Chemical Corporation. I am chief chemist.

Q. Could you tell me a little bit about your educational background; what degrees you have received?

A. Yes. I've received a bachelor of science degree in chemistry from Louisiana State University in 1962; a Ph.D. in organic medicinal chemistry from the University of

Kansas in 1967.

Q. Could you tell me what your job responsibilities are in general in your position as chief chemist?

A. Yes. I am responsible for all of the chemical processes that are being performed at the Vicksburg plant; also current processes and any new processes that we are considering for manufacturing.

Q. Are you familiar with the toxaphene manufacturing process which Vertac Chemical utilized at the plant?

A. Yes.

Q. Have you made any study to determine what levels of toxaphene could have made its way from the reactor to the hydrogen chloride scrubbers?

A. Yes, I have.

MR. KAUFMAN: If the Commission please, I'd like to place Cedar Exhibit No. 13 back on the easel. [SO DOES]

BY MR. KAUFMAN:

Q. So your study was to determine what levels of toxaphene could have gotten from the chlorinator to the hydrochloride gas absorber scrubber system: right?

A. That specifically went into the scrubber.

Q. How did you go about making the study?

A. It was based on the vapor pressure of the components in the first absorber, which would be water, hydrochloric acid present as 32 per cent solution, and a maxi-

mum--the absolute maximum amount of toxaphene that could be present due to its solubility, or low solubility.

Q. In layman's terms does that mean the toxaphene is not readily dissolved in water or---

A. The solubility limit in water is three parts per million toxaphene. It's very unsoluble in water.

Q. What did your study reveal as to what levels of toxaphene could conceivably have gotten into the absorber and scrubber from the reactor?

A. It showed that there would be less than a detectable limit of toxaphene in the scrubber, a detectable limit being .24 parts per billion.

Q. Now that is the maximum---

A. That is the absolute maximum, because this study-- Well, just looking at the off-gasses from the first absorber-- Well, that's not shown on this.

Q. Let's put the other one up there. [CHANGES EXHIBITS] Okay. Would you point out what you were just referring to.

A. Yes. The study was looking at the off-gasses from the first absorber, which is this absorber; and the reason it was just looking at this was because there was insufficient data to show what the concentration of HCL in this absorber was and also what the--the vapor flow to the second absorber. So even just looking at the off-gasses, the

vapors from the first absorber, they would be below the detection limits in the scrubber.

Q. Let's assume that some toxaphene, albeit below this detectable limit, made its way into the caustic scrubber. What would have happened to it in the scrubber?

A. It's known in the literature that toxaphene is not stable in a strong alkaline, in a strong caustic solution. It decomposes. It loses hydrochloric acid and is converted to another compound.

Q. So under that scenario would any toxaphene have gone into the storage tank?

A. Even if some were there at lower than detected limits it would be decomposed by the caustic there.

Q. You heard Mr. King testify about the physical properties of toxaphene. Are those consistent with your version of---

A. Yes, they are. Toxaphene is a very heavy, thick liquid, as we see it. Now we see it as the 90 per cent solution. Toxaphene itself without the 10 per cent solvent is in essence a solid. It's a waxy solid that melts at--above 140 degrees Fahrenheit.

Q. Does it stick to dirt?

A. Oh, it sticks to dirt, it--it's just unsoluble in water. It sticks to dirt and hangs right in.

MR. KAUFMAN: That's all the questions I have.

HEARING OFFICER: Mr. Prestage.

MR. PRESTAGE: Yes. Thank you.

CROSS EXAMINATION

BY MR. PRESTAGE:

Q. You're familiar with the background listing document, aren't you?

A. Yes, I am.

Q. You've read it in its entirety?

A. Yes, I have read it.

Q. Do you recall reading the part concerning the analysis of the bleed stream from Vicksburg Chemical Company, from the process?

A. Yes, I saw the analysis you refer to.

Q. Do you also recall that they found levels of .033 parts per million, I believe that is, in the wastewater of toxaphene?

A. Yes, I saw that that was in there. I don't know where the data came from. Yes, I saw it in the document.

Q. Are you disagreeing with that completely?

A. No. I'm referring to scrubber water.

Q. You're not talking about the wastewater that actually goes into the impoundment?

A. I am talking about the scrubber solution and what I'm saying my study has shown; that there cannot be detectable levels of toxaphene in the scrubber solution.

Q. But you do not question these results?

A. It's in there. I mean, I don't have anything to question it or anything to confirm it. It's in the document and I read it.

Q. Due to the fact that the process stream, the untreated process wastewater, is a listed waste in the regulations---

A. According to this.

Q. ---don't you think it is significant that they would come out with a figure like that, that indeed it's a hazardous waste that is going into the impoundment?

A. In my mind, no, I don't think it should be; because your scrubber solution is-- What your scrubber solution is, is a salt solution. In my mind it's not a hazardous waste. I don't know what occurred when all of this was classified.

Q. But you don't have the evidence here today to refute this that's in the background listing document regarding their analysis?

A. I don't, I don't have any evidence. I don't have any indication of exactly what the strength was.

MR. PRESTAGE: No further questions.

HEARING OFFICER: Does the Commission have any questions of this witness? Any redirect?

REDIRECT EXAMINATION

BY MR. KAUFMAN:

Q. I would like to show you the background document counsel was talking about; a value in there of 33 parts per million, I believe he said.

A. Well, it's---

Q. What is that figure?

A. This figure is 33--it appears to be nanograms per liter.

Q. Is that 33 parts per trillion?

A. Yes. As written, it's nanograms per liter, parts per trillion.

MR. KAUFMAN: No further questions.

HEARING OFFICER: Do you have anything on that point?

MR. PRESTAGE: Yes, sir. I have one question.

RECROSS EXAMINATION

BY MR. PRESTAGE:

Q. This .033 parts per trillion--is that what you said?

A. That would be 33 parts per trillion, as written in the document.

Q. And that is less than your nondetectable limit?

A. That's less than the detection limit that the laboratory is providing us. Their detection limit is .24 parts per billion.

Q. So we can assume that since that figure was less in the background listing document than your nondetectable limits, that that was a source of concern to these people when they formulated the background listing document. You don't question that, do you?

A. Truthfully, I would question whether they can obtain a detection limit that low.

MR. PRESTAGE: No further questions.

HEARING OFFICER: You're excused.

[WITNESS EXCUSED]

MR. SMITH: At this time we call Gary Dietrich to the stand.

COMMISSIONER TRAVIS: Before we get started with this witness, I would like to ask counsel for the State what he was just talking about, because I don't have anything before me except Exhibit 17 that refers to the "Listing Background Document Toxaphene Production." I don't find any of those figures that were just mentioned in this material. Is this something that is coming later or--you were just referring to?

MR. PRESTAGE: Yes, sir. I'm sorry. I failed to remember that they had only introduced a couple of pages of the background listing document. I think it would be good that we introduce the entire background listing document into the record because we will be discussing it.

HEARING OFFICER: Let's do, because it's clear that we're going to continue to talk about it.

MR. MALONE: Col. Blalock, it's my understanding that not only the background listing document but all of the documents that were attached to Mr. Mabry's letter that have been the subject of our exchange of correspondence were part of this record, and if they're not I would like---

HEARING OFFICER: They will be. They just haven't been done yet in this proceeding.

MR. MALONE: We weren't going to necessarily introduce them ourselves. We just assumed that they were already part of the record, and we might be---

HEARING OFFICER: Because we're sort of going in reverse order is why we're in this predicament.

COMMISSIONER TRAVIS: I just would like to say that I do not understand all that I am hearing and I'd be happy for anyone to explain at any time, when you get into something technical, exactly what this means. But if I don't have anything to look at, it really makes it more difficult. And I'm trying, I'm struggling to try to understand how some of the testimony and some of the facts elicited fit into what the issues of this hearing are. And I'll be happy for anybody to explain at any time exactly what it is that this witness--why I'm hearing something that-- I mean, I don't understand why I'm hearing something about Hercules'

production system when I thought I am here to try to determine what it is that's going into the wastewater at Vicksburg.

MR. SMITH: If I could address that, Mr. Travis, briefly. I can understand your confusion, and there have been times in my own preparation of this case where I have shared it and I'm not so sure that at certain aspects I don't still share it.

At the time RCRA was written we had certain chemical products that we could all delineate as being hazardous, and those are the so-called commercial chemical products that were listed in a certain section of the regulations. But in addition to that, EPA was under a mandate from the courts and from Congress to come up with other descriptions of hazardous wastes, because they knew there were hazardous wastes in addition to these listed products.

And they did that in two ways. One way they did it is they came up with this characteristic-type test, the EP test. And when we talk about this company being put through triple jeopardy, that was the second jeopardy we went through. They did the so-called EP test on this impoundment and it passed that.

But in addition to the characteristics they then tried to describe certain wastes because they were not easily identified. And two of the wastes that were des-

cribed are the so-called KO-98 and KO-41. And one of the issues that this Commission is hearing is whether or not the description of KO-98 was intended to cover the process that occurred at Vertac--the former owner of this plant between 1980 and 1982. And the background listing document, which is the document that EPA gave to the D.C. Circuit Court of Appeals each time somebody appealed one of these regulations, is their basis for listing. Primarily, in our view it describes not the process at Vicksburg; but instead describes a wholly different process, a wholly different process place, and that was the process that Hercules had at Brunswick, Georgia.

So when you hear the testimony between the distinctions that existed at Vertac between '80 and '82 and the Brunswick, Georgia, plant we elicit that testimony for that purpose, to show in fact we're not covered.

MR. PRESTAGE: If I might respond to that. Our testimony later in the day will show through Matt Strauss, who is Chief of Waste Characterization Division at Washington, that with regard to these background listing documents they're not supposed to be five specific documents. In other words, you might discuss five facilities in the background listing document; but that doesn't mean that there's another company out there that has the same type of process that would not be covered.

So we need to keep in mind the fact that Vertac was listed, was mentioned in this background listing document, obviously, it was intended that they cover that and that they felt like the process stream applied to this particular listed waste.

HEARING OFFICER: I hope y'all both responded to what the Commission asked. You will have a chance to develop the two views. That's what we're talking about: did it or didn't it.

MR. SMITH: I understand the Commission's confusion and concern over it.

HEARING OFFICER: Okay. Well, let's proceed on.

GARY N. DIETRICH,

having been duly sworn by the court reporter,

was examined and testified as follows, to-wit:

BY MR. MALONE:

Q. Would you state your name for the record, please.

A. Gary N. Dietrich.

Q. Mr. Dietrich, where are you employed and in what capacity?

A. I'm a senior vice president with ICF Technology, a consulting firm in Washington, D.C.

Q. How long have you been employed with ICF?

A. Since May of 1982.

Q. All right, sir. Now you appeared before this

Commission back in September, and some of this testimony you've already given; but just would you state for the Commission your educational and employment background prior to the time you went to work for ICF.

A. I'm a civil engineer by training. I graduated from the California Institute of Technology in 1957. I did graduate work in water research development at Cornell in '66-67; also some other graduate work at the University of Oregon. Occupationally, I spent 23 years with EPA and its predecessor agencies, the Federal Water Quality Administration and the U.S. Public Health Service. In that 23-year tenure I occupied a number of positions in water quality standards, in technical assistance, in enforcement. However, what's most important with regard to these hearings is the last three years of that tenure. I was Deputy Director and then Director of the Office of Solid Waste for EPA in Washington, and in that capacity was responsible for managing the development of the Hazardous Waste Regulations in Parts 260 through 265, including Part 261, which we're discussing today.

Q. Now in May of 1980, Mr. Dietrich, what exactly was your position at EPA?

A. At that time I was Deputy Director of the Office of Solid Waste.

Q. Now that was the approximate time that KO-98 and

KO-41 hazardous waste listings were promulgated by the agency; is that correct?

A. That is correct.

Q. Is toxaphene itself, the product toxaphene, a separately listed hazardous waste?

A. Yes. Toxaphene as a product, if discarded, is listed in Part 261, specifically in Section 261.33, as a hazardous waste if it is discarded.

Q. And was that listing promulgated during your tenure at the agency?

A. Yes, it was.

Q. The other two, the KO-98 and KO-41, those were under 261. What subsection under Part 261 were they promulgated?

A. In Section 261.32.

Q. If you would, Mr. Dietrich, state for the Commission the circumstances that surrounded the promulgation of these hazardous waste listings and particularly the role that you played as Deputy Director at the agency in that effort.

A. This might be somewhat of a long answer, but I think to understand: Basically, the listings, including these two listings, were promulgated under quite a bit of pressure from the time pressure and the technical pressure. And that ultimated resulted from the fact that we originally

did not anticipate listing hazardous wastes. We anticipated having characteristics that would define hazardous wastes, and people could test their wastes to see if those wastes met the characteristics, and if they did, they would have to manage it as a hazardous waste; if not, they would not have to so manage.

So in 1978, I believe, we proposed characteristics, and one of the characteristics-- Well, we proposed the characteristic of ignitability, reactivity--EPA toxicity characteristics that are currently in the regulations today. We also proposed characteristics for organic toxicity, and we got quite a bit of public comments on that proposal. We also re-evaluated within the agency and ultimately determined that we couldn't carry the burden for that type of regulation; that it would have been too difficult for the regulated community to comply with; it would have overstressed the laboratory capabilities available in this country. And there were a lot of technical questions with regard to that characteristic.

So we decided that we couldn't promulgate that characteristic, and that essentially meant that we therefore would not be covering a lot of the hazardous wastes that we thought were causing the most problems. Certainly we wouldn't have covered a lot of the hazardous wastes that were causing problems at the Love Canal, or down at Harriman

County, Tennessee, or Valley of the Dreams in Kentucky.

So it was concluded after many, many long sessions that we would list wastes, we would try to list specific industrial wastes, and hopefully in that listing process we would pick up all or certainly most or a large number of the organic--the wastes that had organic toxicity that we would not have otherwise have covered. That decision was made, and we set about to do that, and that created its own set of difficulties, and that was basically that we didn't have a lot of data about wastes. The Office of Solid Waste had not been funded sufficiently to have down a lot of industrial studies.

Basically, to list hazardous wastes you have to have some industrial studies. You have to know for each industrial segment what wastes they are producing, what toxic materials they have in those wastes, and what concentration so you can make a judgment about whether those wastes should or should not be regulated as hazardous waste.

So the Office of Solid Waste really didn't have a great deal of its own data, and of necessity we went to the Effluent Guidelines Division of EPA who had for eight or so years done--had done industrial studies to support their program. And most of the listings that we did do were based on data from the Effluent Guidelines Division. Even there we had problems, because the data that they had really was

based on what are the concentrations of constituents in wastewaters, and they didn't have a lot of information on constituents in sludge, which was one of the types of waste that we very much wanted to regulate.

In addition, the Effluent Guidelines folks had been more interested and focused on examining wastes for the traditional wastewater effluents: biological oxygen demand, chemical oxygen demand, suspended solids, pH. They didn't have a great deal of information on individual hazardous constituents, such as toxaphene or trichloroethylene.

To summarize real quickly, we ended up having to use whatever data they had, that the Effluent Guidelines folks had, and what little data we had. It ended up to be fairly meager data. At the same time we were under pressure to list as many wastes as possible because we knew that we would be horribly criticized by the public and by Congress for not having covered a lot of organic waste, and if we didn't cover those through the listing program then we would be horribly criticized.

So on one hand I had my boss, who was the Assistant Administrator for Water and Waste Programs--I believe was the title at the time--was pushing me strongly to list two-three-four-five hundred waste streams, and I didn't have the data to do that, or we didn't have the data to do that. We were also under pressure by court order to promulgate

these regulations by the spring of 1980, and so, we were pressing to make these listings and get that job done. So on one hand we had poor data; we were being pushed to list more and more waste, and we had very little time to go out and collect data, and it was a high-pressure situation.

I only make that point to indicate that we did make mistakes, and we did list some wastes that we should not have. One example of that was the leather tanning wastes which we listed by virtue of the fact that they had chromium, we presumed hexavalent chromium, which is a highly toxic form of chromium. When we listed those wastes and entered them in final form the leather tanning industry came to us and said, hey, wait, we don't have hexavalent chromium in our waste, we only have trivalent, and the reason we have trivalent is that's the type of form of chromium that tans leather. Hexavalent won't tan leather. As a result we had to go back and undo that waste listing. So we did make mistakes; but we made a valiant try, and we promulgated about 100 listed wastes in Part 261.32.

Q. And two of those wastes then were the KO-98 and KO-41?

A. That is correct.

Q. Now, Mr. Dietrich, when you were asked to express opinions for Cedar with regard to the scope of those list-

ings what documents did you take a look at to try to come to some conclusions about the intent and scope?

A. Well, I read the so-called listing background document that was prepared by the Office of Solid Waste.

Q. You mentioned effluent guideline documents during your testimony. I'm going to hand you a document, and read the title of that document and tell me what it is and how it relates to KO-98 and KO-41 listings.

A. This document is the "Wastewater Treatment Technology Documentation for Toxaphene Manufacture." It was prepared by the Effluent Guidelines Division of the Office of Water, EPA, in Washington. It was prepared for them. It was actually prepared by Midwest Research Institute. It is one of the references in the background document that I talked about earlier and therefore is part of the rule-making record for the KO-41 and KO-98 that was listed. And I have read this document.

Q. Does that document refer specifically to the toxaphene manufacturing processes used by Hercules and also at the Vicksburg plant?

A. Yes, it does. It goes over probably in somewhat more detail than the background document, the processes of both the Hercules and the Vicksburg plant. It also covers two other plants which were producing toxaphene at that time. This was February of 1976.

MR. MALONE: I would like to offer that as an exhibit. Now we have already introduced, but I don't think the exhibit number was placed on it, the actual Listing Background Document. So I suppose that would be the next exhibit number.

HEARING OFFICER: And then you want that one entered?

MR. MALONE: Yes, sir.

HEARING OFFICER: The "Listing Background Document" will be Exhibit No. 18, and the "Wastewater Treatment Technology Documentation for Toxaphene Manufacture" will be Exhibit No. 19.

[SAID DOCUMENTS MARKED EXHIBIT NO. 18 AND 19, RESPECTIVELY, APPENDED HERETO.]

BY MR. MALONE:

Q. If you would, it might be useful to the Commission to understand why the agency generated listing background documents and what those documents have to do with the actual hazardous waste listings that were promulgated while you were with the agency.

A. Well, the administrative procedures requires EPA and other Federal agencies to support their rule-making with information that is placed in the dockets, in the public dockets. And so, there was an obligation on our part to put

all of the bases for listing KO-41 and KO-98 into the public docket. We chose to do that by creating a background docket, document, for each of the listed wastes or for each group of listed wastes, and that that background document would contain all the data, either directly or by reference, that was relied upon to develop the rule. So in this case the background document that we've referred to is the official docket material that accordingly contains all of the supporting data that was used to develop and promulgate the KO-41 and KO-98 listings.

Q. Now in September of last year you appeared before this Commission and testified regarding the de minimis rule as it related to past dinoseb production. I'm going to ask you--you earlier testified that toxaphene itself is a listed hazardous waste. Is that correct?

A. Yes.

Q. Now, do you recall what the listing number is in the regulations?

A. It's 231, I believe.

Q. How about 123?

A. Yes, 123.

Q. That is under 261.33; is that correct?

A. That's correct.

Q. Now with regard to such toxaphene have you formed any opinion as to whether or not the release of such toxa-

phene into the surface impoundment was or was not a result of de minimis losses as contemplated by the de minimis rule that you testified about last time?

A. Well, in my reading of the background document and the referenced wastewater treatment technology document, I am pretty convinced in its description of the Vicksburg plant that any toxaphene that was discharged into impoundments came in wastewater streams in which the amount was a de minimis amount, and I can go through that and describe that if you would like for me to.

Q. Well, sir, you testified, and I don't want to burden the Commission with testimony that repeats what you've already-- You did testify about the de minimis rule. We had a chart that illustrated the applicability of the rule. Is it your opinion that that same rule is applicable to toxaphene production at the Vicksburg plant?

A. Oh, okay. There are in the regulations a de minimis rule which basically say that toxaphene, the product toxaphene, which if discarded into a wastewater that is subject to the NPDES program, if those losses into that wastewater are from de minimis losses then the wastewater itself does not become a hazardous waste. I think we went over the application of the rules with regard to dinoseb last time. I believe that that same set of rules applies to toxaphene in this case.

Q. Now, Mr. Dietrich, with specific reference to the two hazardous waste listings that have been cited by the Bureau--the subject of this case, KO-98 and KO-41--I want to ask you this--a hypothetical question, if you will: Assume that in 1980, at the time you and your office promulgated those two listings, assume that there was no Hercules plant at that time and there never had been; so the only toxaphene manufacturing plant that had ever existed--I want you to assume this--was in fact the Vicksburg plant, and the only thing that you had at your disposal in the way of data was data that related to the Vicksburg plant, as reflected in the background document and in other references to the background document, at that time.

And I'm going to ask you this question on that hypothetical set of facts: Would EPA have promulgated the two regulations, KO-41 and KO-98?

A. Well, I think EPA would not have promulgated those two waste listings. Certainly I wouldn't have supported that listing, and the reason is that we only have one piece of data in the background document with regard to wastewater discharges from the Vicksburg plant, and that one piece of data is the 33 nanograms per liter concentration of toxaphene in the scrubber water that was mentioned previously, a level that I might add meets the drinking water standards. Presumably therefore, if it wasn't so salty that water could

be used as drinking water. It's the only piece of data in the background document relating to Vicksburg, and with that one piece of data I don't think that EPA would have had sufficient information in order to support a listing of either the KO-41 or the KO-98 wastes.

Q. All right, sir. Now I'm going to ask you to assume another hypothetical, and that is: Go back to 1980 and think of all the data you had available in 1980, and there was in fact a toxaphene plant at Brunswick, Georgia, operated by Hercules just as we know there was. But let's also assume that you had available to you in 1980 all of the data that has been generated subsequent to that date right up until today relating to the Vicksburg plant, its process, and the sediment, the contamination of toxaphene in the sediment that's in the pond. And I will ask you this question under those set of circumstances:

Would the two listings have been promulgated, and if so, would they have been any different in your judgment than as they were promulgated in 1980? Do you understand my question?

A. Yes. Well, I'm not sure I can always speak for EPA, but I--I myself would have very sternly recommended that there be a listing of KO-41 and KO-98 with regard to the wastewater and wastewater treatment sludges generated by the Hercules plant. I would at the same time have recom-

mended no listing for those two waste streams with regard to the Vicksburg plant. And perhaps I should explain why that would be my recommendation.

When I look at the background document there is good--in my opinion, good solid data on the Hercules plant with regard to the amount of toxaphene that was generated and discharged into wastewaters and into wastewater treatment sludges. And I believe that there was adequate data--that was adequate data to substantiate a listing of those two waste streams for that particular plant. I also see in the background document that we had little data on the Vicksburg plant.

Today I have some additional data. That additional data is that there are sediments in the impoundment. Those sediments contain toxaphene in average concentrations of about 200 parts per million. However, those sediments, when subjected to the EP toxicity test, passed that test and would indicate that those materials would not be hazardous wastes by virtue of the EP toxicity characteristic. That to me suggests these new pieces of data, together with the one piece of data we had back in 1980, suggests that the waste streams, the wastewater and the wastewater--so-called wastewater treatment sludges from the Vicksburg plant were marginal from a hazardous potency point of view, I guess you would say, and it would have been my position that they

don't merit listing; that we do have the EP characteristic for toxaphene which would enable us to list those wastes if in fact they needed--would enable us to bring those wastes into the regulatory framework if in fact they should at some time and for some reason pass the characteristic test.

So I would have relied on characteristics for the Vicksburg plant. I would have relied on listings and would have listed KO-41 and 98 wastes for the Hercules plant.

Q. Mr. Dietrich, in your opinion does the pond that we're talking about today in Vicksburg, Mississippi, does that present any threat to the environment or specifically to the groundwater that might be in the vicinity of the Vicksburg plant?

A. From what I can see it--I think it does not create a threat. In fact, I think it provides an environmental protection function, a very valuable function. But with regard to the first question, I think, as the last witness indicated, that toxaphene absorbs onto soils very well, and the toxaphene that is in that pond is basically absorbed onto sediments in the bottom of that pond. It is unsoluble in water, and that toxaphene is not going to move from those sediments. It is not going to move--to solubilize in any significant degree into the water and therefore be discharged into surface waters.

And I might add, even if it were discharged in the

surface water, that toxaphene would be taken out of those discharges by the carbon filtration that is provided at the facility. And I doubt very much that there would be any significant amount that would solubilize and leach down into the groundwater body. Certainly the information that we have would indicate to us--indicates that there has been no detection of toxaphene in any of the wells, and those wells have been sampled for several years now. There is no indication that toxaphene has been discharged into surface waters. I think the toxaphene in the pond is going to stay there and stay there safely.

If you take those impoundments away, as has already been stated; if you close the pond, as has already been stated, you have the problem of what are you going to do with the runoff water from that plant property? Whether we like it or not--that plant has been in operation for 20 or 30 years--has inadvertently caused some contamination of the soils in and around the plant, and as far as--as long as that situation remains and as long as it rains from time to time we are going to have storm water runoff from the general plant property. I think the impoundment serves an extremely valuable function by collecting that water and preventing it from going into that small water course that runs along the side of the plant where that contaminated storm water runoff could cause quite a problem.

So I, just looking at it from a very practical point, think that the benefits of having that pond from a surface water pollution control standpoint far outweigh the necessity of closing it in order to comply with a RCRA rule.

Q. Well, bringing you back to the RCRA rule and the question before the Commission of whether or not--the extent of coverage I want to direct your attention to the chart on the board, which is Exhibit No. 17. Typically, did the background listing document summarize the basis for the listing?

A. That's what they're supposed to do.

Q. So in other words, if there is any issue or question in anybody's mind about what was intended by the listing could they go to the background document for help? Is that a fair statement?

A. Yes. That would be the source to go to.

Q. All right, sir. Now you've already testified that not only was the rule promulgated under your supervision, but also that--let me ask you this, Mr. Dietrich: I'm sure that quite a number of rules were promulgated under your--while you were at the agency. Roughly how many?

A. Well, that depends on how you count a rule. I mean, we promulgated---

Q. Well, let's just say hazardous waste listings.

A. I think we listed about 100 individual process wastes in 261.32.

Q. In order today to get a fix on exactly why it was listed and what was intended to be covered and so forth, you would have to go back and look--I mean, you're not intimately familiar with every rule or every hazardous waste listing that was promulgated under your tenure, are you?

A. Well, I'm reasonably familiar; but I from time to time like everybody else have to go back and read the fine print, so to speak, and refresh my memory.

Q. Having done that at our request in your opinion should any wastes which were generated by the Vicksburg plant on and after November 19, 1980, be regulated as either KO-98 or KO-41 wastes under RCRA?

A. Well, I honestly think not, and the reason I think not is because I think that EPA did a bum job--and I have to bear quite a bit of the responsibility for that--in promulgating the KO-41 and KO-98 listings and applying them to the Vicksburg plant. I believe we have a faulty listing, at least with regard to Vicksburg. I do not think that's a faulty listing with regard to Hercules. And I feel very strongly that having made that error and having not corrected that error that we should not be enforcing what to me is a faulty rule. There is just not sufficient information on Vicksburg in the background document to substantiate that it posed anywhere near the same human health and environmental threats as to wastes from the Hercules plant.

It is clear when I read the background document that EPA concluded the necessity to list KO-41 and KO-98 wastes based on facts that you see highlighted on the exhibit here, Exhibit 17. It's very clear in their conclusions they listed those wastes because they contained 7 tons a day of wastewater treatment sludge and 140 pounds a day of toxaphene contained in those sludges. You don't have anyway near that type of discharges at the Vicksburg plant. So it's my position that to enforce those listings with regard to Vicksburg would be enforcing what I believe to be a faulty regulation.

Q. Mr. Dietrich, it was suggested earlier by counsel for the Bureau that this company has a remedy available to it, and that is delisting, I believe he said--a Petition to Delist. Do you have any opinion as to that suggestion?

A. Well, certainly that is a remedy. It's expensive to do and it takes time to do. But certainly that is a remedy. It seems to me kind of unfair to place the burden on Cedar Chemical at this point in time to undo something that was done wrong in the first place. So an alternative to delisting is to persuade either EPA or this Commission or both that the requirement--the listing of KO-41 and KO-98 as it applies to Vicksburg is a faulty regulation, and to deal with it by rule-making, or rule-making interpretation by either one of those bodies, rather than placing the burden

on the company to basically undo a mistake that I believe was made.

MR. MALONE: Thank you. I have no further questions.

CROSS EXAMINATION

BY MR. PRESTAGE:

Q. Mr. Dietrich, basically what your testimony has been today is that EPA just did a bum job and they made a mistake and it was a faulty listing. Is that what you're saying?

A. I believe that sums it up.

Q. But it is a listing today: right? KO-98 and KO-41, untreated processed wastewater from the production of toxaphene and the process stream of sludge are listed wastes at this time and have been since 1980; isn't that correct?

A. I think I would have to agree with that.

Q. Okay. Now we talked--counsel talked about the delisting procedure. Let's talk about that a minute. I believe you did state that that was a remedy that could be approached by these people.

A. Of course.

Q. All right. Could you explain the delisting procedure? I understand that you were one of the writers of that procedure. Could you basically just explain it briefly, how it works?

A. Well, basically it's a petition for rule-making. You submit your petition either to the state or EPA. I believe the State of Mississippi has not assumed primacy for delisting; therefore, that petition would have to be submitted to EPA in Washington. With that petition you would be required to supply information that substantiates why you believe the listed waste should not be listed. In this case that information would require sampling results from the sediments in the impoundment. In fact, EPA has developed quite a good set of guidelines with regard to the level and degree of sampling that would have to be done. They would have to be, if I recall the guidance correctly, 15 or 20 composite samples taken in those three ponds taken on a random basis. Those composite samples--we'll take the sample of the sediment from top to bottom. Those would have to be analyzed. They would have to be analyzed for all of the Appendix Eight constituents from 400 different constituents.

Q. You're saying there's more involved than just the analysis of toxaphene in the delisting procedure?

A. They would have to be analyzed for more than just toxaphene.

Q. Why is that?

A. Because Congress came along and wrote a provision in the statute that said you can't delist exclusively and solely on the basis that EPA listed the waste, which in this

case was toxaphene; that you have to carry the burden of showing that the waste is hazardous for any other reason. And so, basically in order to implement that, EPA has had to require petitioners for delisting to basically analyze and report information on all of the other Appendix Eight constituents unless it could be shown for some of those constituents that there is no possibility that they would be in that list. And I suppose you could do that for some of the Appendix Eight constituents in this case and therefore could probably reduce your analysis of constituents to maybe 100 or 150 of the 400.

Q. In effect your testimony today though is that you would ask this Commission to delist basically toxaphene and based solely on the levels of toxaphene in the wastewater or in the sludge. Is that what you're asking today?

A. I'm saying today that I think that the State of Mississippi doesn't need to have to carry the obligation of implementing and enforcing a bad regulation in which there is no supporting documentation in the background document to support that. In other words---I mean, the background document has a lot of information and it concluded that Hercules was a bad apple. It had no information on Vicksburg, but it made the assumption that Vicksburg was also a bad apple.

Q. Isn't it true that the background listing document spoke generally about the hazardous nature of toxaphene and

that it was extremely toxic, extremely mutagenic, a known carcinogine?

A. Sure.

Q. Are you saying that applied only to Hercules and not to Vicksburg?

A. No. Toxaphene has those properties wherever it is. But that doesn't mean that wherever it is you have to regulate it. Certainly EPA did not regulate the cattle dips where toxaphene was used. Certainly EPA didn't regulate other possible uses of toxaphene. EPA didn't list a lot of wastes that could have been listed because we didn't have the information.

Q. Would you consider background listing documents, or the listing background document, to be a site specific document? What I mean by that is, was a background listing document supplied for every facility?

A. No, it wasn't. The theory that we used at that time was the same theory that had been used in the Effluent Guidelines. That is that you prepare a listing for an industrial segment or for a waste--a waste or several waste streams from that industrial segment. What the Effluent Guidelines people learned through doing this is that if they looked at any one particular industry--the steel industry, the electroplating industry, the pesticides manufacturing industry; and they learned very quickly that the industry

has quite a bit of variation, and they tended to subcategorize small plants and large plants, plants that use this process versus that process, and then develop a background document for each one of the subcategories.

That was done--that was not done very much in the listing of these hazardous wastes in 261.32 because we really didn't have enough data to subcategorize. But as I look at the data today it very--it occurs to me that you had an industrial segment here, the toxaphene production industrial segment, that had two plants in it, one of which was large and one of which was small, one of which had a different process than the other, and it should have been subcategorized. So I believe that, yes, there should have been a listing for one-half of the industry, i.e, Hercules, and you could have considered a listing for the other half, i.e., Vicksburg, and it would have been my opinion that you would not have listed that second category.

Q. That was not done?

A. That was not done.

Q. All right. Would you agree with the statement that a company can be regulated even though it might not be specifically spelled out in the background listing document? In other words, if you have 50 companies who manufacture a specific product and have that specific waste stream do they actually have to be discussed in that background listing

document before that regulation would apply to it?

A. I think generally the burden we felt that we had to carry and Effluent Guidelines had to carry is when the industrial segment was small enough that you did list all of the companies. Yes, you did cover them specifically by name and you had information on all of those companies in the document. Where the industrial category was large, such as the electroplating industry, you obviously can't get down to that level of specificity. So basically the theory there is that you promulgate a listing for a subsection of the industry that might apply to 100-200 plants, and if any of those plants for one reason or another is fundamentally different than the other plant then they have the opportunity to come in and get a delisting.

Q. Is it not reasonable that since there were only two plants at this particular time--I believe Hercules and Vicksburg Chemical--that were generating this type of process stream, isn't it reasonable-- And also I might add that since they were included in the actual background listing document by name and specifically included, isn't it reasonable to assume that EPA knew and discussed and studied information from both facilities?

A. Well, they did. They didn't have any information on the Vicksburg facility, so they studied a very small amount of information.

Q. But Vicksburg Chemical is mentioned in that background listing document.

A. Sure it's mentioned.

Q. If a company were to produce toxaphene after the listing came out and have that process waste stream or that treatment sludge would they be regulated even though they came out after the fact and began production of toxaphene?

A. Yes.

Q. I believe you testified that you were formerly with EPA. How long has it been since you left?

A. I left EPA in May of 1982.

Q. So you're certainly not the voice of EPA today.

A. Obviously. I don't work for EPA. I'm not sure I was then either.

[LAUGHTER]

Q. When the regs. came out in their interim final form isn't there a comment period that's allowed for companies to come in and make comments and say, hey, this is not right with regard to my company?

A. Yes, there was a 6-month comment--I think it was a 180-day comment period. Because the reg. was so large and complex we gave a very ample comment period.

Q. Did Vicksburg Chemical Company make a comment during that period of time?

A. I don't know of any comments that they-- I've not

seen any comments that they might have made. I might mention that a lot of the regulated community didn't make any comments, because they spent that whole six months trying to understand the regulations. I mean, they were very, very complex, and it's taken lots of people a great deal longer than that six months to fully understand all of the nuances of the regulations.

Q. You had mentioned earlier the EP toxicity test.

A. Yes.

Q. When you follow the delisting procedure--say this company was going through delisting--would EPA accept that test with regard to the analysis done on the impoundment?

A. Yeah. Basically the information that you have to submit would be the concentrations of toxaphene and other constituents on the Appendix Eight list that are found in the extract from the sediments; that extract being derived by the EP test, which is an extract procedure. So you would be using the EP test in order to get an extract. You would then analyze that extract for toxaphene and 150 other constituents, and that would be the information that would be supplied to EPA to substantiate the delisting.

Q. Isn't it true that the EP toxicity test does not work well with organics such as what we have here today?

A. Yes. I think it's been concluded that there is a better test. In fact, one has been proposed.

Q. You had testified earlier that the impoundment served a very useful purpose because of the fact that it served as a water shed basically to prevent any contaminants from running into the streams and river. Do you know whether or not there's any option available to Cedar Chemical Company rather than to actually close the impoundment to actually shut it down? Do you know if there is any option available to keep it open but yet still regulate the impoundment?

A. I believe that the State of Mississippi probably has an adequate set of regulations to regulate that impoundment in a responsible and accurate way without applying the so-called RCRA regulations. I believe the pond could be taken out of the RCRA program and that through various water and other regulatory authorities that the State has--as well as perhaps a consent agreement with Cedar Chemical--could assure that there would be monitoring of those impoundments; there would be maintenance of the dikes, the levees, to make sure they don't become weak; there would be monitoring of the effluent discharge in the Mississippi River; there would be--

I think you could even--certainly in a consent decree, you could even agree to the maintenance of a closure fund, or a trust fund, that would provide enough money to close that impoundment. You could do the same thing that

you do under RCRA right now, that has been done under RCRA for the past five years--I think you could do under other agreements.

Q. If the State were to choose not to regulate this waste that EPA does regulate, then in effect the State would not have an equivalent program to the Federal regulations. Would you agree with that?

A. It would--it would not have an identically equivalent program. However, there are lots of states that don't have an equivalent program. In fact, Mississippi is one of the few states that basically has adopted the regulations, the Federal regulations, almost word for word. But I would say a good two-thirds of the states have some variation and some of that variation is not exactly equivalent. I believe the statute does not require equivalency, it requires consistency.

And I believe--and the position that I would take is that if the State of Mississippi would conclude that there was not sufficient support for KO-41 and KO-98 and they chose not to include that in their regulation, or to at least interpret their regulation that those two waste streams were not included therein, I don't believe that would constitute sufficient deviation from the Federal regulations to warrant a finding of inconsistency.

Q. But you don't deny that there is a process avail-

able to be used by Cedar Chemical Company to go about a delisting procedure, do you?

A. Sure. For $50,000 and six to nine months worth of worry and effort there is a procedure to do that.

Q. I believe you stated earlier that you were Deputy Director of Office of Solid Waste; is that correct?

A. Yes.

Q. During the period of time these listings were promulgated?

A. Yes.

Q. Was that a supervisory role?

A. Yes.

Q. Do you know Matt Strauss?

A. Yes.

Q. What position did Matt Strauss hold while you were there during that period of time?

A. Well, he may want to correct me, but I seem to recall he was a section chief in the Characterization Branch, which was in the Technology Division within the Office of Solid Waste.

Q. Did you have day-to-day contact or hands-on experience with the actual listings?

A. Yes.

Q. In other words, you're saying that you were there working with Matt Strauss daily promulgating these listings?

A. That may be a slight overstatement. I was responsible for overseeing the full development of the regulations. Obviously, I couldn't write all of the regulations myself or all the background documents. The roles that I played were-- One of the principal roles was to chair a number of decision meetings in which each one of these regulations were--their regulatory concepts were discussed. I chaired a number of RCRA meetings. I reviewed the concept paper and pre-regulatory development papers. I reviewed drafts of regulation and drafts of preamble.

Q. Okay. Let me ask you this: During the time that you were Deputy Director at the time this list came out, KO-98 and KO-41, were you ever contacted by Vicksburg Chemical Company? In other words, during that comment period did they make any kind of objection to you at all and say, hey, we shouldn't be listed here?

A. I don't know that-- They certainly didn't make any call or write a letter to me. They might have commented on the regulation. If they did, I was unaware.

MR. PRESTAGE: No further questions.

HEARING OFFICER: Does the Commission have any questions of this witness?

COMMISSIONER GOLDMAN: Yes, I would like to ask a question or two.

HEARING OFFICER: All right.

COMMISSION EXAMINATION

BY COMMISSIONER GOLDMAN:

Q. You're familiar with the physical layout there at the plant, the impoundment and so forth?

A. Yes.

Q. In your opinion does the impoundment and the amount of this chemical present in the impoundment pose any particular hazard to the public health?

A. I think it doesn't. I think the toxaphene is well absorbed under the sediments; the sediments are in the bottom of the pond; the sediments are going to stay in the bottom of the pond, they're not going to move; water is not going to leach those toxaphenes out in any significant amounts to cause it to migrate into the groundwater; water is not going to solubilize any significant amount of toxaphene out for discharge into the Mississippi River. So I think you basically have a pretty safe depository of toxaphene in the impoundment right now.

You know, the alternative of when you close this thing is to perhaps leave--one option of closing it is to leave the toxaphene right there. One method of closure is merely to take the water out of the impoundment, to solidify the sludge and to put a cap on it. And so, the toxaphene would not be moved under that scenario. It would remain exactly where it is today, and it would probably be as

safe--would be as safe under that scenario closure.

Another way to close that pond is to dig it all up and haul it away to a landfill. But then you're bringing the same situation--you're putting the same sediment with toxaphene at about 200 parts per million in the ground. It's probably going to be safe in that disposal situation; certainly since you would have to go to a hazardous waste disposal service.

It seems to me that where the stuff is now is not a great deal different than where it would be if you closed the impoundment one way or the other, and that in all those cases that because it is well absorbed under the soil it does not migrate into drinking water, into air, into surface waters; therefore, it does not present a significant threat, or any threat I believe, to human health or the environment.

Q. Another thing I'd like to ask you: It appeared to me that we've tried two lawsuits. The State says merely the fact that toxaphene is present in whatever quantity subjects this plant to regulation, and my understanding of this is that the company says the de minimis doctrine exempts their company from regulation. Do you have a comment on that?

A. Yes. I'll comment in two ways. The background document talks about wastewater streams that in the Hercules case basically included 140 pounds a day of toxaphene. I see those same wastewater streams at the Vicksburg plant,

but I don't see anywhere near 140 pounds a day of toxaphene in those waste streams.

So the first point I would make is I believe that there is no substantial evidence that the wastewater streams that are supposed to be regulated as KO-98 have anywhere near the toxaphene that the background document--did not have anywhere near the toxaphene that the background document says they did.

In addition to that there was some loss--there is always some loss of product when you handle that product. When you fill a drum and take the hose out of the drum you're going to have a loss. When you fill a truck you're going to have the same situation. EPA--and typically that lose of product, those de minimis spills and leaks, are washed into the sewer and in this case go into the impoundment. EPA looked at that issue subsequent to this delisting and promulgated a "de minimis rule" that said where you lose product, a listed hazardous waste--products that are listed hazardous wastes--when you lose that in de minimis quantities into wastewaters it doesn't cause those wastewaters through the mixture rule to become hazardous wastes. Therefore I would think--I firmly believe that the wastewaters in the Vicksburg impoundment should not ever be concluded to be hazardous waste by virtue of de minimis losses from the loading operation that Sonny King talked about.

Q. In other words, you're saying that the amount of toxaphene present is consistent more with de minimis spills than it is with waste generated by the manufacturing process?

A. Yes. We've had testimony today that the toxaphene in the scrubber effluent was probably below--very likely below the detectable limit, which is something like 2 parts per billion. Certainly the background document seems to substantiate that with a 33 parts per trillion concentration. The Effluent Guidelines document, by the way, says that there is no toxaphene in the scrubber effluent, that no detectable amounts could be found.

Another waste stream that was talked about in the background document is the so-called washdown waste stream from the production process. I think Sonny King said they never washed down their reactor tank or the equipment in the reactor area. Perhaps Hercules did, I don't know; but they certainly didn't in Vicksburg. So there would have been little or no toxaphene in that waste stream.

So I just don't know where you get 140 pounds a day of toxaphene in the wastewaters from the Vicksburg plant. I think there was some de minimis discharges, yes; but those de minimis discharges are within the spirit and I believe the letter of the regulation to except without causing it to become hazardous waste.

COMMISSIONER GOLDMAN: That's all.

HEARING OFFICER: Any further questions by the Commission? Any redirect?

MR. MALONE: Just one or two.

REDIRECT EXAMINATION

BY MR. MALONE:

Q. You were asked earlier, Mr. Dietrich, about whether EPA would accept the EP tox. test. Now what we've heard about the EP toxicity test, I don't think anybody has testified yet about what that really is. Would you explain to the Commission what does EP stand for and what is the intent of carrying out that test.

A. EP stands for extract procedure. It refers to a laboratory test in which you take a solid waste, or in this case a sediment in a sludge, and you physically put it in a container with a filter holding it, and you put it through an extract medium--in this case it's slightly acidic water--and you run this through this sample for a certain length of time, and at the end of that time you take your extract, which presumably would have solubilized or dissolved some of the materials in the waste, and therefore those materials would be dissolved in the extract. You take that extract and you analyze it for toxaphene or mercury or arsenic or whatever constituent you're interested in. That's basically what the extract procedure is.

The so-called EP toxicity test that we talked about is principally designed to determine whether there are hazardous levels of heavy metals and six pesticides in solid waste in sufficiently high amounts to warrant their being regulated as hazardous wastes. So the EP toxicity test is basically used to deal with metal contaminants.

Q. Is toxaphene one of those pesticides?

A. Toxaphene is one of those pesticides.

Q. What is the TCLP method? Is that designed to get you the same kind of information?

A. It's the same type of test in the sense that you are extracting constituents from the waste, and you take the extract and you analyze it for the constituents, particularly organic constituents. The particulars of the test I'm not familiar with.

Q. Is that test more suitable for organics than---

A. My understanding is that it was specifically designed to be more suitable for organics.

Q. Did you look at any data in this case with regard to the sediment in the pond where it was subjected to that test--TCLP?

A. I believe that one of the samples was subjected to the TCLP test.

Q. That was the State sample?

A. That was the State sample. The samples were done

in November.

Q. Did it pass?

A. Yes, it did.

Q. And you also testified that there are a majority of the states who have adopted as their primacy to enforce hazardous waste regulations--have not adopted the regulations precisely as they were promulgated by EPA under RCRA. Did I understand you correctly?

A. A good many of the states have not, yes.

Q. The regulations that we're looking at today that are under scrutiny, are these Federal or State regulations that we're talking about today?

A. We're talking about the State regulations.

Q. Who is empowered to enforce and interpret those regulations?

A. The State of Mississippi.

MR. MALONE: Thank you. I have no further questions.

HEARING OFFICER: Any recross?

RECROSS EXAMINATION

BY MR. PRESTAGE:

Q. Isn't it true that EPA requires that the states maintain regulations at least as stringent as EPA in order to maintain the state's primacy?

A. Yes.

MR. PRESTAGE: No further questions.

HEARING OFFICER: Any further questions by the Commission? Okay. The witness is excused.

[WITNESS EXCUSED]

HEARING OFFICER: About how many more witnesses do you have?

MR. SMITH: Two.

COMMISSIONER GOLDMAN: I will give notice that I intend to make a motion prior to five o'clock that if this case is not finished we would continue until the next meeting of the Commission. I do not intend to sit here tonight.

[HEARING RECESSED FROM 12:00 PM UNTIL 1:15 PM.]

MR. SMITH: May it please the Commission, I would like to make a statement if I could to the Commission, a proposition.

I understand the Commission's desire to wrap this up and wrap it up quickly. And I have been concerned, very frankly, since the earliest days of preparation for this particular hearing that what is really going on is an argument over a legal question rather than any factual dispute. I frankly think the facts are pretty well in agreement.

I personally am in a position--involved in some litigation that grew out of this explosion down in Crystal Springs where I am not going to be available during the

months of June, July and August.

I have talked to my client, and we have just a couple of more witnesses to put on, and although we have given Mr. Prestage an opportunity to cross-examine our witnesses we are willing to waive cross examination of his witnesses, and suggest to the Commission that the procedure be followed that we've used before in front of other administrative agencies in this state where my two remaining witnesses will simply submit prefiled testimony within a week or day or whatever future time you want, and allow Mr. Prestage's witnesses to do the same. He wouldn't have the benefit of crossing mine; I will waive the cross examination of his, and in that way the Commission, which I'm competent is not--based on my past experience--is not going to make a decision today, and would have the benefit of the complete record before it--an opportunity to study the testimony in a deliberate fashion, and put us in a position of in fact wrapping up. And if we could do that, really the only other thing that I would have left would be the introduction of the samples that I sent to Sam yesterday.

HEARING OFFICER: Art, have you got any comment on that proposal?

MR. PRESTAGE: Let me make sure that I understand this correctly. You would ask that my witnesses, rather than take the stand, just submit a report to you?

MR. SMITH: Well, just as I would do with my remaining witnesses. This is the procedure that's followed in several administrative agencies in this state. I just type out questions and answers and put them on the stand. Very frankly, you've cross-examined my primary interpretation witness, Mr. Dietrich. As I understand it, Mr. Strauss is your primary interpretation witness. He'd be able--You'd ask him questions and he'd answer and in effect I wouldn't be able to cross-examine him. So there wouldn't be any particular benefit to be gained.

The point I think I'm trying to drive at with respect to it, Art, is that I'm not confident we are going to finish today. I'm not sure if a great deal is going to be gained by going forward--in the matter going forward. It seems to me if my client is willing to waive the cross that we are the ones that's giving something up in fact.

MR. PRESTAGE: Personally I don't have any problems with it if that's the Commission's pleasure. We do have a couple of witnesses with EPA--one from Washington and one from Atlanta.

COMMISSIONER GOLDMAN: I like it.

HEARING OFFICER: What is the Commission's pleasure?

THE CHAIRMAN: Don't you think we should hear the witnesses that are here?

MR. SMITH: I'm assuming that you're going to go back and study their testimony in written form anyhow.

COMMISSIONER GOLDMAN: I move we accept that procedure.

HEARING OFFICER: Y'all just have a seat and let's let them decide what they want to do.

[COMMISSION CONFERRING]

COMMISSIONER GOLDMAN: I move we adopt the procedure.

COMMISSIONER BOYD: I'll second that motion.

COMMISSIONER GOLDMAN: I move that we adopt the procedure that they recommend.

COMMISSIONER TRAVIS: That is in this case that we accept the submission of written testimony from those witnesses that have not heretofore testified and then make the decision based on the record that we have before us so far plus the written testimony of the additional witnesses.

The hearing will be complete. It will be the same as if we had all the oral testimony. It would simply spare us the time of sitting here all afternoon and listening to these witnesses. Counsel for both sides have accepted this as being an acceptable way to complete this hearing, and it seems to me it's the thing we ought to do, to save all of us time.

HEARING OFFICER: I don't think there's anything

wrong with what's been proposed. You do forego the rights to ask your own questions of witnesses, which if you're willing to do, certainly there is nothing wrong with this procedure.

COMMISSIONER TRAVIS: You have a motion before you, Mr. Chairman.

THE CHAIRMAN: All in favor of the motion please say "aye."

[FOUR AFFIRMATIVE VOTES]

COMMISSIONER TRAVIS: May I ask one thing please, Mr. Chairman: I think it would be helpful to the Commission, gentlemen, if you all--the lawyers for both sides would lay out exactly what the issues are and exactly what facts you think apply to those issues in as brief a form as you possibly can. Just cut right through and get right to the point: What are the issues that you want us to decide and what are the facts that you think bear on those issues, just are briefly and concisely as you can. I think that will be helpful to all of us.

MR. SMITH: Yes, sir.

COMMISSIONER TRAVIS: And you can agree between yourselves.

HEARING OFFICER: You two get together on that and whenever we get the information we'll get it to the Commissioners.

MR. SMITH: I also would like to say one other thing for the record before we adjourn. It's been a very difficult 12 months for my client; but one thing that has made it tolerable has been the cooperation and the effort that your staff has shown towards me personally and towards my client, and I wanted to say that for the record.

HEARING OFFICER: This will close the record until we get the written testimony.

--HEARING CONCLUDED--

CERTIFICATE OF COURT REPORTER

I, Kay E. Miles, Court Reporter and Notary Public in and for the County of Hinds, State of Mississippi, hereby certify;

That on the 27th day of May 1987 the foregoing proceedings were taken by Ruth Blackledge, Court Reporter, in shorthand with electronic verification, and having been reduced to typewritten form by me, I hereby take responsibility that the foregoing 99 pages contain a full, true and correct transcript of those proceedings;

That all witnesses were placed under oath by the court reporter to truthfully answer all questions in this matter;

Further, this Certificate applies only to the original and copies of the transcript as notarized by me. I assume no responsibility for the accuracy of any reproduced copies not made under my control or direction.

Witness my signature and seal this the 13th day of July 1987.

Kay C. Miles
Kay E. Miles

My Commission Expires:
March 9, 1989

Court Reporters Supply House Style # 4-S

AFFIDAVIT OF HERBERT A. JOHNSTON
Witness for Cedar Chemical Corporation

STATE OF MISSISSIPPI

COUNTY OF HINDS

After being first duly sworn, the Affiant did state as follows:

My name is Herbert A. Johnston. I have a Ph.D in Chemistry from the University of Southern Mississippi, and am employed by Environmental Protections Systems, Inc., 160 Upton Drive, Jackson, Mississippi, 39209, as an analytical chemist in charge of the Analytical Department of Environmental Protection Systems, Inc.

In November of 1986, the State of Mississippi took split stream samples from the surface impoundment in Vicksburg, Mississippi, operated by Cedar Chemical Corporation. The split stream sample given by the state to Cedar Chemical Corporation was given by Cedar Chemical to our company for analysis. Attached hereto as Exhibit 1 to this Affidavit are the results of the analysis performed on the split stream samples received by my company. I note that while our results were basically consistent with that of the State Chemical Lab, one of the samples is considerably different, sample #86116172. In my opinion, proper statistical analysis of the sampling, if it is to be used to determine the amount of toxaphene in the pond, would require either an averaging of the samples or the establishing of a mean. All of the

results achieved by the Mississippi State Chemical Lab are on the same order of magnitude with the exception of sample #86116172 which is considerably higher. Our results for this sample are one quarter of the state's results. Proper statistical analysis would require, in my opinion, that the state because the difference between this one sample and its remaining 18, either resample and analyze that sample point again or remove the highest and lowest samples and average the remaining. In any event, the average of our total samples represented approximately 200 parts per million toxaphene in the surface impoundment.

We were also given samples by Cedar Chemical of 12 wells which encircle the surface impoundment. These samples were collected on May 16, 1987 and analyzed on May 22, 1987. Attached hereto as Exhibit 2 are those analytical results. As can be seen, no toxaphene could be detected in any of the wells at the known toxaphene detection limits.

Also on May 16, 1987, the company gave to us a composite sample taken from the surface impoundment. Again, this sample was analyzed by EP Tox Extraction for toxaphene and no toxaphene could be found at the detection limit.

While our lab does work for many private entities including Cedar Chemical Corporation, we have also worked for the State of Mississippi, specifically, the Mississippi Department of Natural Resources.

The Affiant sayeth further not.

This the 3rd day of June, 1987.

Herbert A Johnston
HERBERT A. JOHNSTON

STATE OF MISSISSIPPI

COUNTY OF HINDS

Came on before me this day, Herbert A. Johnston, who by me after being first duly sworn, did state and affirm that the above and foregoing facts are true and correct.

Susan Carpenter
NOTARY PUBLIC

My Commission Expires:

My Commission Expires Feb. 7, 1989

ENVIRONMENTAL PROTECTION SYSTEMS, INC.

P. O. Box 20382 • 160 Upton Drive • Jackson, MS 39209
Telephone: (601) 922-8242
(800) 523-0659

7215 Pine Forest Road • Pensacola, FL 32506
Telephone: (904) 944-0301
(800) 874-0272

LABORATORY REPORT

Ec-1.3449 | 1/c

CLIENT: Vicksburg Chemical
LOCATION: Vicksburg, MS
DATE: 11/20/86
INVOICE NO.: 011479/ncr

COLLECTED BY: Client (7954)
DATE COLLECTED: See Below
DATE RECEIVED: 11/06/86
DATE ANALYZED: 11/14/86

LABORATORY SAMPLE IDENTIFICATION

86116169 - Location 1 + 1A 6' Depth; 10/30/86; 11:00 a.m.
86116173 - VC-F Location Site 2 + 5 4' Depth; 10/30/86; 12:00 p.m.
86116174 - VC-G Location 3 + 4 4' Depth; 10/30/86; 12:00 p.m.

ANALYSES	IDENTIFICATION NO. 6169	6173	6174	LIMIT	QUALITY CONTROL STANDARD OR SPIKE VALUE	% RECOVERY	RELATIVE % DEVIATION
Arsenic, EP Leachable, mg/l EPA No. D004	0.26	0.714	0.361	5.0	0.010	111	2.3
Barium, EP Leachable, mg/l EPA No. D005	<0.10	0.16	0.24	100.0	1.00	90	0
Cadmium, EP Leachable, mg/l EPA No. D006	0.01	0.03	0.01	1.0	0.20	100	0
Chromium, EP Leachable, mg/l EPA No. D007	<0.01	<0.01	<0.01	5.0	0.50	100	0
Chromium, Hexavalent, EP Leachable, mg/l, EPA No. D007	<0.01	<0.01	<0.01	5.0	0.50	100	0
Lead, EP Leachable, mg/l EPA No. D008	<0.10	0.12	<0.10	5.0	1.00	112	0
Mercury, EP Leachable, mg/l EPA No. D009	<0.001	<0.001	<0.001	0.2	0.002	120	0
Selenium, EP Leachable, mg/l EPA No. D010	<0.003	<0.003	<0.003	1.0	0.010	80	0
Silver, EP Leachable, mg/l EPA No. D011	<0.01	<0.01	<0.01	5.0	0.20	105	0
"EP TOXICITY" Extraction	Yes	Yes	Yes				

COMMENT

Analyses conducted in accordance with 40 CFR, Part 261, July, 1982, Test Methods for Evaluating Solid Waste (SW-846).

CERTIFICATION

MANAGER, QUALITY ASSURANCE

MANAGER, ANALYTICAL DEPARTMENT

ENVIRONMENTAL PROTECTION SYSTEMS, INC.

P. O. Box 20382 • 160 Upton Drive • Jackson, MS 39209
Telephone: (601) 922-8242
(800) 523-0659

7215 Pine Forest Road • Pensacola, FL 32506
Telephone: (904) 944-0301
(800) 874-0272

LABORATORY REPORT

86-1-3445 | 2/6

CLIENT: Vicksburg Chemical
LOCATION: Vicksburg, MS
DATE: 11/20/86
INVOICE NO.: 011479/mcr

COLLECTED BY: Client (7954)
DATE COLLECTED: See Below
DATE RECEIVED: 11/06/86
DATE ANALYZED: 11/14/86

LABORATORY SAMPLE IDENTIFICATION

86116169 - Location 1 + 1A 0' Depth; 10/30/86; 10:00 p.m.
86116173 - VC-F Location Site 2 + 5 4' Depth; 10/30/86; 12:00 p.m.
86116174 - VC-G Location 3 + 4 4' Depth; 10/30/86; 12:00 p.m.

ANALYSES	IDENTIFICATION NO. 6169	6173	6174	LIMIT	QUALITY CONTROL STANDARD OR SPIKE VALUE	% RECOVERY	RELATIVE % DEVIATION
Endrin, EP Leachable, mg/l EPA No. D012	<10	<10	<10	0.02	0.4	NA	NA
Lindane, EP Leachable, mg/l EPA No. D013	<10	<10	<10	0.4	0.4	NA	NA
Methoxychlor, EP Leachable, mg/l EPA No. D014	<10	<10	<10	10	0.4	NA	NA
Toxephene, EP Leachable, mg/l EPA No. D015	<10	<10	<10	0.5	0.4	NA	NA
2,4 - D, EP Leachable, mg/l EPA No. D016	<10	<10	<10	10	0.4	NA	NA
2,4,5 - TP Silvex, EP Leachable, mg/l EPA No. D017	<10	<10	<10	1	0.4	NA	NA
Arsenic, Total, mg/kg	16.0	44.2	12.0		0.010	111	2.3
Toxephene, mg/kg	334	56	62		1.11	NA	2.3

COMMENT

Analyses conducted in accordance with 40 CFR, Part 261, July, 1982, Test Methods for Evaluating Solid Waste (SW-846).

CERTIFICATION

Herbert A. Johnston
MANAGER, QUALITY ASSURANCE

MANAGER, ANALYTICAL DEPARTMENT

ENVIRONMENTAL PROTECTION SYSTEMS, INC.
P. O. Box 20382 • 160 Upton Drive • Jackson, MS 39209
Telephone: (601) 922-8242
(800) 523-0659
7215 Pine Forest Road • Pensacola, FL 32506
Telephone: (904) 944-0301
(800) 874-0272

LABORATORY REPORT

86.1.3445 | 3/6

CLIENT: Vicksburg Chemical
LOCATION: Vicksburg, MS
DATE: 11/20/86
INVOICE NO.: 011479/ncr

COLLECTED BY: Client (7954)
DATE COLLECTED: See Below
DATE RECEIVED: 11/06/86
DATE ANALYZED: 11/14/86

LABORATORY SAMPLE IDENTIFICATION

86116176 - VC-M Location 9 + 10 + 12 2'Depth; 10/30/86; 4:00 p.m.

ANALYSES	IDENTIFICATION NO. 6176			LIMIT	QUALITY CONTROL STANDARD OR SPIKE VALUE	RECOVERY	RELATIVE DEVIATION
Arsenic, EP Leachable, mg/l EPA No. D004	0.226			5.0	0.010	111	2.3
Barium, EP Leachable, mg/l EPA No. D005	0.40			100.0	1.00	90	0
Cadmium, EP Leachable, mg/l EPA No. D006	0.02			1.0	0.20	100	0
Chromium, EP Leachable, mg/l EPA No. D007	<0.01			5.0	0.50	100	0
Chromium, Hexavalent, EP Leachable, mg/l, EPA No. D007	<0.01			5.0	0.50	100	0
Lead, EP Leachable, mg/l EPA No. D008	<0.10			5.0	1.00	112	0
Mercury, EP Leachable, mg/l EPA No. D009	<0.001			0.2	0.002	120	0
Selenium, EP Leachable, mg/l EPA No. D010	<0.003			1.0	0.010	80	0
Silver, EP Leachable, mg/l EPA No. D011	<0.01			5.0	0.20	105	0
"EP TOXICITY" Extraction	Yes						

COMMENT

Analyses conducted in accordance with 40 CFR, Part 261, July, 1982, Test Methods for Evaluating Solid Waste (SW-846).

CERTIFICATION

Herbert A. Johnston
MANAGER, QUALITY ASSURANCE

MANAGER, ANALYTICAL DEPARTMENT

ENVIRONMENTAL PROTECTION SYSTEMS, INC.

P. O. Box 20382 • 160 Upton Drive • Jackson, MS 39209
Telephone: (601) 922-8242
(800) 523-0659

7215 Pine Forest Road • Pensacola, FL 32506
Telephone: (904) 944-0301
(800) 874-0272

LABORATORY REPORT

86-1-3445 | 4/6

CLIENT: Vicksburg Chemical
LOCATION: Vicksburg, MS
DATE: 11/20/86
INVOICE NO.: 011479/ncr

COLLECTED BY: Client (7954)
DATE COLLECTED: See Below
DATE RECEIVED: 11/06/86
DATE ANALYZED: 11/14/86

LABORATORY SAMPLE IDENTIFICATION

86116176 - VC-M Location 9 + 10 + 12 2'Depth; 10/30/86; 4:00 p.m.

ANALYSES	IDENTIFICATION NO. 6176			LIMIT	QUALITY CONTROL STANDARD OR SPIKE VALUE	% RECOVERY	RELATIVE % DEVIATION
Endrin EP Leachable, mg/l EPA No. D012	<10			0.02	0.4	NA	NA
Lindane, EP Leachable, mg/l EPA No. D013	<10			0.4	0.4	NA	NA
Methoxychlor, EP Leachable, mg/l EPA No. D014	<10			10	0.4	NA	NA
Toxaphene, EP Leachable, mg/l EPA No. D015	<10			0.5	0.4	NA	NA
2,4 - D, EP Leachable, mg/l EPA No. D016	<10			10	0.4	NA	NA
2,4,5 - TP Silvex, EP Leachable, mg/l EPA No. D017	<10			1	0.4	NA	NA
Arsenic, Total, mg/kg	13.4				0.010	111	2.3
Toxaphene, mg/kg	<10				1.11	NA	2.3

COMMENT

Analyses conducted in accordance with 40 CFR, Part 261, July, 1982, Test Methods for Evaluating Solid Waste (SW-846). Due to high background materials, higher than normal dilutions were taken. As noted in 40CFR136 and SW846 detection limits are matrix dependent.

CERTIFICATION

Herbert A Johnston
MANAGER, QUALITY ASSURANCE

MANAGER, ANALYTICAL DEPARTMENT

ENVIRONMENTAL PROTECTION SYSTEMS, INC.

P. O. Box 20382 • 160 Upton Drive • Jackson, MS 39209
Telephone: (601) 922-8242
(800) 523-0659

7215 Pine Forest Road • Pensacola, FL 32506
Telephone: (904) 944-0301
(800) 874-0272

LABORATORY REPORT

86-1-3-45 | 5/6

CLIENT: Vicksburg Chemical
LOCATION: Vicksburg, MS
DATE: 11/20/86
INVOICE NO.: 011479/ncr

COLLECTED BY: Client (7954)
DATE COLLECTED: See Below
DATE RECEIVED: 11/06/86
DATE ANALYZED: 11/14/86

LABORATORY SAMPLE IDENTIFICATION

86116170 - VC-B Location 2 + 5 6' Depth; 10/30/86; 12:00 p.m.
86116171 - VC-C Location 3 + 4 6' Depth; 10/30/86; 12:00 p.m.
86116172 - VC-E Location 1 + 1A 4' Depth; 10/30/86; 11:00 a.m.
86116175 - VC-I Location 1 + 1A 2' Depth; 10/30/86; 11:00 a.m.

ANALYSES	IDENTIFICATION NO. 6170	6171	6172	6175	QUALITY CONTROL STANDARD OR SPIKE VALUE	% RECOVERY	RELATIVE % DEVIATION
Arsenic, Total, mg/kg	4.11	36.1	88.6	115	0.10	111	2.3
Toxephene, mg/kg	244	176	487	84	1.11	NA	NA

COMMENT

Analyses conducted in accordance with 40 CFR, Part 261, July, 1982, Test Methods for Evaluating Solid Waste (SW-846).

CERTIFICATION

MANAGER, QUALITY ASSURANCE

MANAGER, ANALYTICAL DEPARTMENT

ENVIRONMENTAL PROTECTION SYSTEMS, INC.

P. O. Box 20382 • 160 Upton Drive • Jackson, MS 39209
Telephone: (601) 922-8242
(800) 523-0659

7215 Pine Forest Road • Pensacola, FL 32506
Telephone: (904) 944-0301
(800) 874-0272

LABORATORY REPORT

No. 1-3445 | c/c

CLIENT: Vicksburg Chemical
LOCATION: Vicksburg, MS
DATE: 11/20/86
INVOICE NO.: 011475/ncr

COLLECTED BY: Client (7954)
DATE COLLECTED: See Below
DATE RECEIVED: 11/06/86
DATE ANALYZED: 11/14/86

LABORATORY SAMPLE IDENTIFICATION

86116177 - VC-F Location 17 + 18 2' Depth; 10/30/86; 3:45 p.m.
86116176 - VC-A Location 21 + 22 2' Depth; 10/30/86; 4:30 a.m.

ANALYSES	IDENTIFICATION NO. 6177	6176			QUALITY CONTROL STANDARD OR SPIKE VALUE	% RECOVERY	RELATIVE % DEVIATION
Arsenic, Total, mg/kg	7.6	22.0			0.010	111	2.3
Toxephene, mg/kg	<0.2	<0.2			1.11	NA	NA

COMMENT

Analyses conducted in accordance with 40 CFR, Part 261, July, 1982, Test Methods for Evaluating Solid Waste (SW-846).

CERTIFICATION

Herbert A. Levinstein
MANAGER, QUALITY ASSURANCE

MANAGER, ANALYTICAL DEPARTMENT

Exhibit ? to Herbert Johnston Affidavit

ENVIRONMENTAL PROTECTION SYSTEMS, INC.

P. O. Box 20382 • 160 Upton Drive • Jackson, MS 39209
Telephone: (601) 922-8242
(800) 523-0659

7215 Pine Forest Road • Pensacola, FL 32506
Telephone: (904) 944-0301
(800) 874-0272

LABORATORY REPORT

[illegible]

CLIENT: Cedar Chemical Corporation
LOCATION: Vicksburg, MS
DATE: 05/22/87
INVOICE NO.: 013405/ncr

COLLECTED BY: Client (7954)
DATE COLLECTED: 05/18/87
DATE RECEIVED: 05/18/87
DATE ANALYZED: 05/22/87

LABORATORY SAMPLE IDENTIFICATION

87053026 - Location 1a
87053027 - Location 2
87053028 - Location 4
87053029 - Location 5

ANALYSES	IDENTIFICATION NO.				QUALITY CONTROL		
	3026	3027	3028	3029	STANDARD OR SPIKE VALUE	% RECOVERY	RELATIVE % DEVIATION
Toxaphene, ug/l	<0.24	<0.24	<0.24	<0.24	2	91	10

COMMENT

Analyses conducted in accordance with 40 CFR, Part 261, July, 1982, Test Methods for Evaluating Solid Waste (SW-846).

CERTIFICATION

John Broussard
MANAGER, QUALITY ASSURANCE

[illegible]
MANAGER, ANALYTICAL DEPARTMENT

ENVIRONMENTAL PROTECTION SYSTEMS, INC.

P. O. Box 20382 • 160 Upton Drive • Jackson, MS 39209
Telephone: (601) 922-8242
(800) 523-0659

7215 Pine Forest Road • Pensacola, FL 32506
Telephone: (904) 944-0301
(800) 874-0272

LABORATORY REPORT

CLIENT:	Gear Chemical Corporation	COLLECTED BY:	Client (7954)
LOCATION:	Vicksburg, MS	DATE COLLECTED:	05/15/87
DATE:	05/22/87	DATE RECEIVED:	05/18/87
INVOICE NO.:	013409/ncr	DATE ANALYZED:	05/22/87

LABORATORY SAMPLE IDENTIFICATION

87053050 - Location 6
87053051 - Location 5
87053052 - Location 9
87053053 - Location 10

ANALYSES	IDENTIFICATION NO. 3050	3051	3052	3053	QUALITY CONTROL STANDARD OR SPIKE VALUE	% RECOVERY	RELATIVE % DEVIATION
Toxaphene, ug/l	<0.24	<0.24	<0.24	<0.24	2	91	10

COMMENT

Analyses conducted in accordance with 40 CFR, Part 261, July, 1982, Test Methods for Evaluating Solid Waste (SW-846).

CERTIFICATION

MANAGER, QUALITY ASSURANCE

MANAGER, ANALYTICAL DEPARTMENT

ENVIRONMENTAL PROTECTION SYSTEMS, INC.

P. O. Box 20382 • 160 Upton Drive • Jackson, MS 39209
Telephone: (601) 922-8242
(800) 523-0659

7215 Pine Forest Road • Pensacola, FL 32506
Telephone: (904) 944-0301
(800) 874-0272

LABORATORY REPORT

67.1.1015 | 3/4

CLIENT: Cedar Chemical Corporation
LOCATION: Vicksburg, MS
DATE: 05/22/87
INVOICE NO.: 013405/ncr

COLLECTED BY: Client (7954)
DATE COLLECTED: 05/16/87
DATE RECEIVED: 05/16/87
DATE ANALYZED: 05/22/87

LABORATORY SAMPLE IDENTIFICATION

87053034 - Location 11
87053035 - Location 12
87053036 - Location 14
87053037 - Location 15

ANALYSES	IDENTIFICATION NO.				QUALITY CONTROL		
	3034	3035	3036	3037	STANDARD OR SPIKE VALUE	% RECOVERY	RELATIVE % DEVIATION
Toxaphene, ug/l	<0.24	<0.24	<0.24	<0.24	2	91	10

COMMENT

Analyses conducted in accordance with 40 CFR, Part 261, July, 1982, Test Methods for Evaluating Solid Waste (SW-846).

CERTIFICATION

John Broussard
MANAGER, QUALITY ASSURANCE

MANAGER, ANALYTICAL DEPARTMENT

ENVIRONMENTAL PROTECTION SYSTEMS, INC.

P. O. Box 20382 • 160 Upton Drive • Jackson, MS 39209
Telephone: (601) 922-8242
(800) 523-0659

7215 Pine Forest Road • Pensacola, FL 32506
Telephone: (904) 944-0301
(800) 874-0272

LABORATORY REPORT

07.1.191? | 474

CLIENT: Cedar Chemical Corporation
LOCATION: Vicksburg, MS
DATE: 05/22/87
INVOICE NO.: 015405/mcr

COLLECTED BY: Client (7954)
DATE COLLECTED: 05/15/87
DATE RECEIVED: 05/16/87
DATE ANALYZED: 05/22/87

LABORATORY SAMPLE IDENTIFICATION

87055038 - Dirt Pond

ANALYSES	IDENTIFICATION NO.				QUALITY CONTROL		
	3038				STANDARD OR SPIKE VALUE	% RECOVERY	% RELATIVE DEVIATION
Toxaphene, mg/l	<0.24				0.002	91	10
"EP TOXICITY" extraction	Yes				NA	NA	NA

COMMENT

Analyses conducted in accordance with 40 CFR, Part 261, July, 1982, Test Methods for Evaluating Solid Waste (SW-846).

CERTIFICATION

Ken Broussard
MANAGER, QUALITY ASSURANCE

MANAGER, ANALYTICAL DEPARTMENT

CEDAR CHEMICAL
CORPORATION
EXHIBIT NO. _____

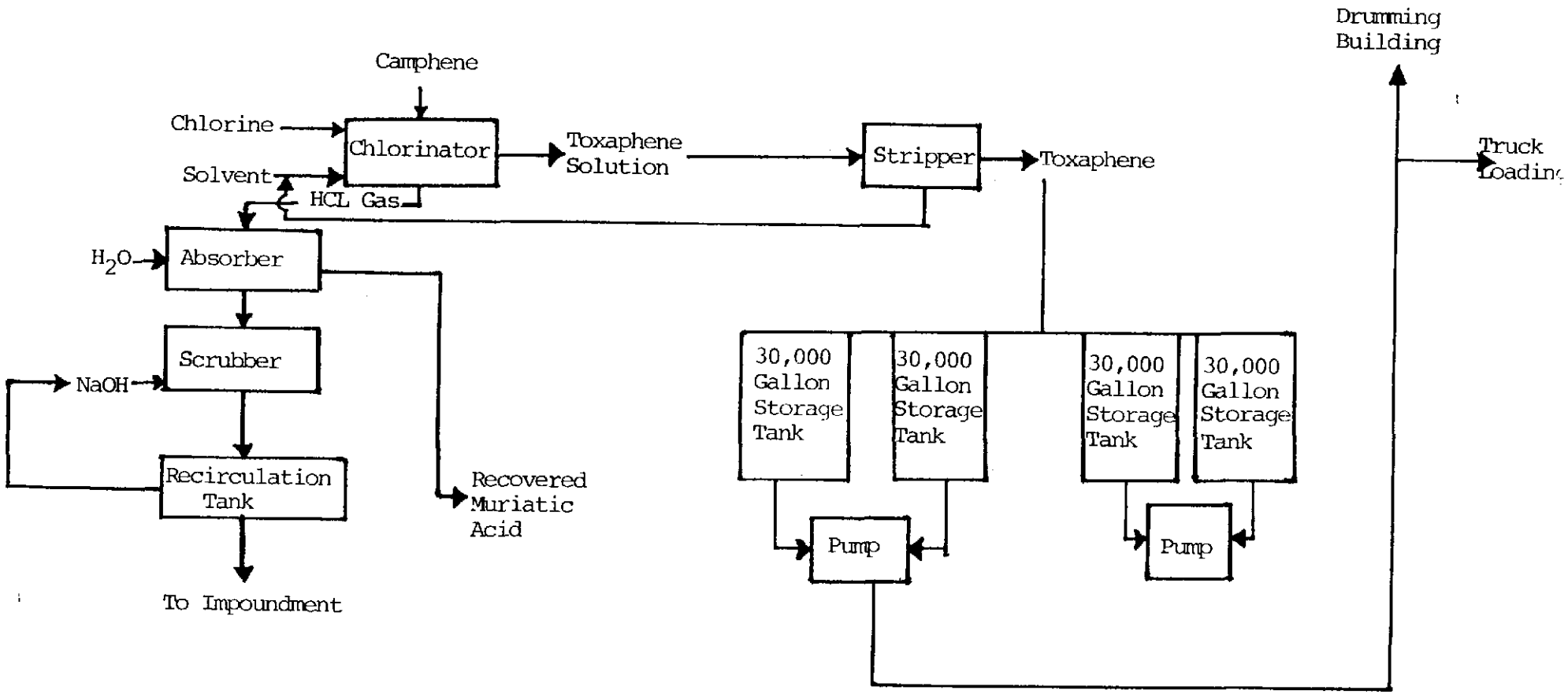

VICKSBURG CHEMICAL/VERTAC
TOXAPHENE PRODUCTION SCHEMATIC

CEDAR CHEMICAL
CORPORATION
EXHIBIT NO. ____

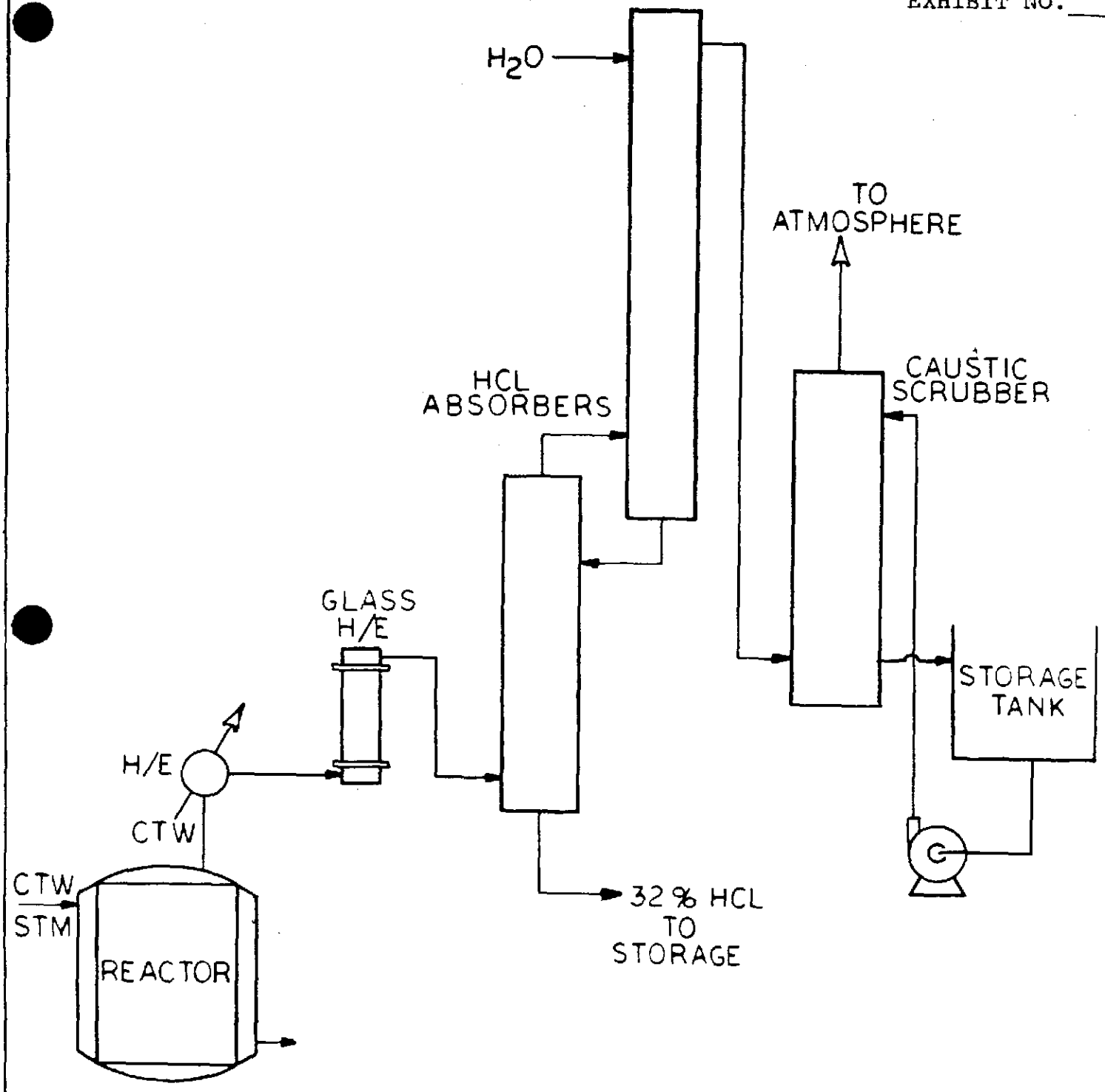

EXHIBIT
14

TOXAPHENE
EMISSIONS
CONTROL
SYSTEM

VERTAC CHEMICAL

CEDAR CHEMICAL
CORPORATION
EXHIBIT NO. ___

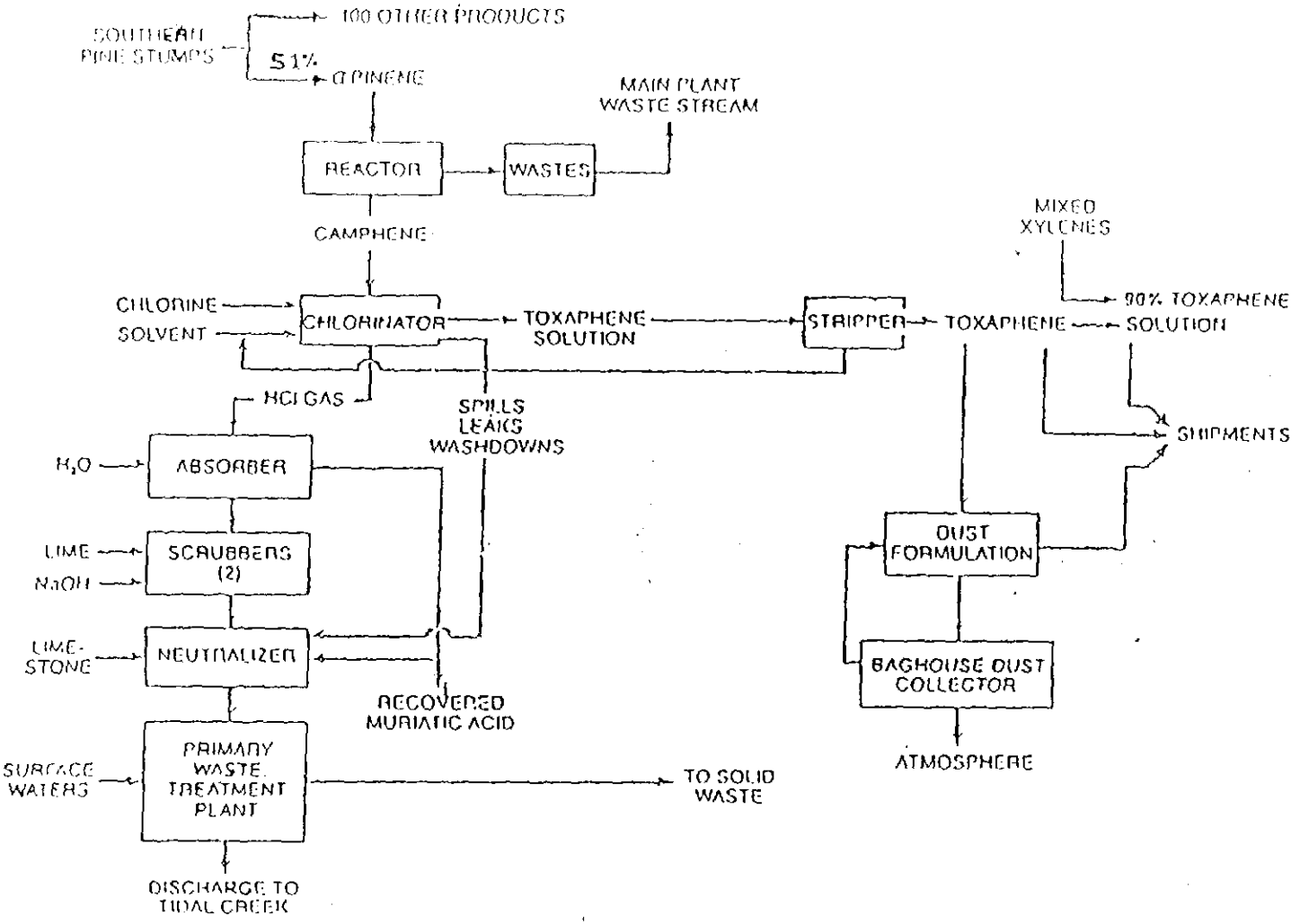

Figure 1. HERCULES' PRODUCTION AND WASTE SCHEMATIC FOR TOXAPHENE [4]

EXHIBIT 15

CEDAR CHEMICAL
CORPORATION
EXHIBIT NO. ____

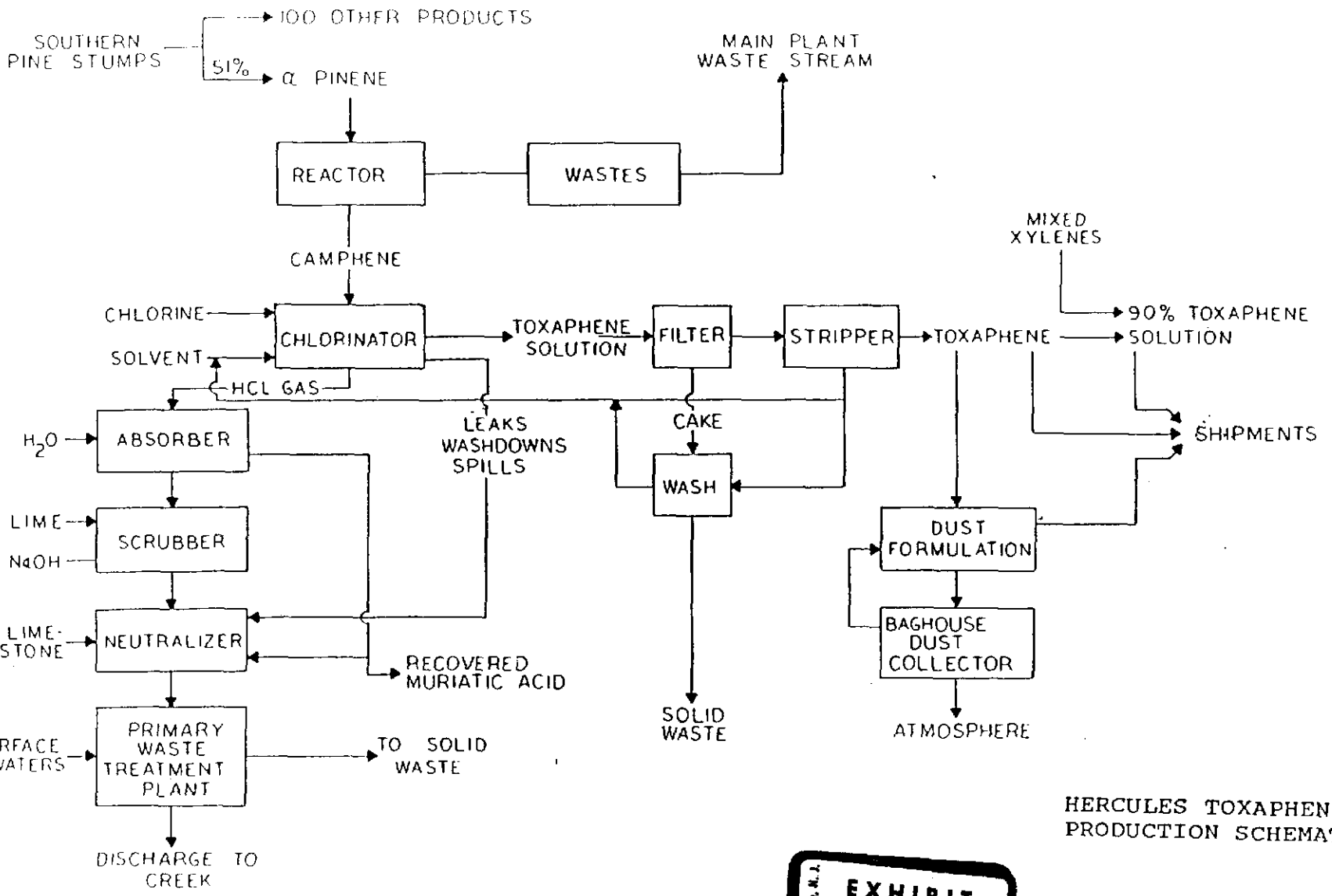

HERCULES TOXAPHENE
PRODUCTION SCHEMATIC

CEDAR CHEMICAL
CORPORATION
EXHIBIT NO. ____

C. Waste Generation and Management*

At the Hercules plant, wastewater is generated from the toxaphene production process (leaks, spills and washdowns), as well as from the scrubbing of vent gases in the HCl absorption and recovery step (see Figure 1).

(2) The volume of wastewater treated averages 4.4-4.6 liters/sec (3) (0.10-0.15 MGD).

2) The treated wastewater is directly discharged to a navigable waterway.

In Hercules' toxaphene wastewater treatment system, an average of 7 tons/day of wastewater treatment sludge (settled solids) is generated. (4,5)* The sludge results from the addition of diatomaceous earths and lime to the wastewater as sorption [sic] agents for the removal of toxaphene from the wastewater. (5)

*Variations in wastewater treatment systems or in wastewater sources at the two plants may result in different concentrations of toxaphene in the wastewater treatment sludges.

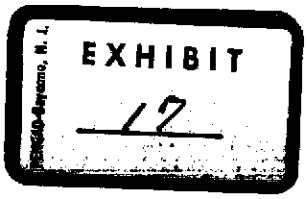

CEDAR CHEMICAL
CORPORATION
EXHIBIT NO. ____

LISTING BACKGROUND DOCUMENT

TOXAPHENE PRODUCTION

Wastewater Treatment Sludge from the Production of Toxaphene (T)

Untreated Process Wastewater from the Production of Toxaphene (T)

I. Summary of Basis for Listing

The production of toxaphene, a chlorinated hydrocarbon pesticide, results in the generation of process wastewater containing heavily diluted concentrations of toxaphene, and wastewater treatment sludges that contain approximately one percent of toxaphene by weight.

The Administrator has determined that process wastewater and wastewater treatment sludge from toxaphene production may pose a substantial present or potential hazard to human health or the environment when improperly transported, treated, stored, disposed of or otherwise managed, and therefore should be subject to appropriate management requirements under Subtitle C of RCRA. This conclusion is based on the following considerations:

1) Toxaphene is present in each of these waste streams; in the case of the wastewater treatment sludge, if it is found in very high concentrations. Toxaphene has been reported to cause cancer in laboratory animals and is extremely toxic. Toxaphene has also been recognized by the Agency as exhibiting substantial evidence of being carcinogenic. It is also a potent teratogen and has been shown to be mutagenic.

2) Approximately 7 tons of wastewater treatment sludge containing about 140 lbs. of toxaphene are generated per production day. About 19,000 tons of sludge are already disposed of in a landfill in Georgia. (5)

EXHIBIT 18

LISTING BACKGROUND DOCUMENT

TOXAPHENE PRODUCTION *

Wastewater Treatment Sludge from the Production of Toxaphene (T)

Untreated Process Wastewater from the Production of Toxaphene (T)

I. Summary of Basis for Listing

The production of toxaphene, a chlorinated hydrocarbon pesticide, results in the generation of process wastewater containing heavily diluted concentrations of toxaphene, and wastewater treatment sludges that contain approximately one percent of toxaphene by weight.

The Administrator has determined that process wastewater and wastewater treatment sludge from toxaphene production may pose a substantial present or potential hazard to human health or the environment when improperly transported, treated, stored, disposed of or otherwise managed, and therefore should be subject to appropriate management requirements under Subtitle C of RCRA. This conclusion is based on the following considerations:

1) Toxaphene is present in each of these waste streams; in the case of the wastewater treatment sludge, if it is found in very high concentrations. *Toxaphene has been reported to cause cancer in laboratory animals and is extremely toxic. Toxaphene has also been recognized by the Agency as exhibiting substantial evidence of being carcinogenic. It is also a potent teratogen and has been shown to be mutagenic.

2) Approximately 7 tons of wastewater treatment sludge containing about 140 lbs. of toxaphene are generated per production day. About 19,000 tons of sludge are already disposed of in a landfill in Georgia. (5)

* Note: This document contains Vertac information only.

3) Disposal or treatment of these wastes in improperly designed or operated landfills or unlined lagoons could result in substantial hazard if toxaphene migrates via groundwater or surface water exposure pathways.

4) Toxaphene is highly persistent in the environment and bioaccumulates greatly in environmental receptors.

II. Sources of the Waste and Typical Disposal Practices

A. Profile of the Industry

Toxaphene is produced in this country by two manufacturers: Hercules, Inc. at its Brunswick, Georgia plant, and Vertac Chemical Company at its Vicksburg, Mississippi plant.(1) Data collected by EPA/ Effluent Guidelines Division indicate that in 1977,

1,600 metric tons (3.5 million pounds) of toxaphene were produced at the Vicksburg plant*.(2,3)

Toxaphene is a complex mixture of polychlorinated camphenes containing 67 to 69 percent chlorine and has the approximate composition of $C_{10}H_{10}Cl_8$. It has been used exclusively as a non-systemic and persistent contact and ingestion insecticide. Toxaphene is marketed as a 90 percent toxaphene-10 percent solvent solution using mixed or modified xylene as the solvent. This solution is then formulated by various companies into emulsifiable concentrates, either alone or with other insecticides. Little or no toxaphene is currently being used in dust, wettable powder, or granule formulations.

RCRA CONFIDENTIAL
BUSINESS INFORMATION
Does Not Contain National
Security Information (E.O. 12065)

*All underlined data are obtained from proprietary reports and data.

RCRA CONFIDENTIAL
(2.3.12065)

B. Manufacturing Process

Toxaphene is produced in essentially the same manner by both domestic manufacturers. The reaction chemistry is as follows:(19)

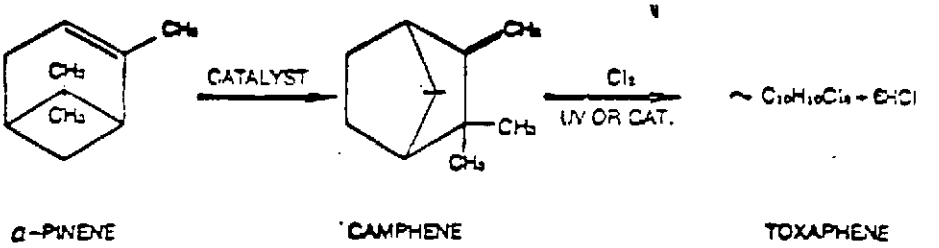

C. Waste Generation and Management*

At the Hercules plant, wastewater is generated from the toxaphene production process (leaks, spills and washdowns), as well as from the scrubbing of vent gases in the HCl absorption and recovery step (see Figure 1).

(2) The volume of wastewater treated averages 4.4-4.6 liters/sec(3) (0.10-0.15 MGD).

(2) The treated wastewater is directly discharged to a navigable waterway.

In Hercules' toxaphene wastewater treatment system, an average of 7 tons/day of wastewater treatment sludge (settled solids) is generated.(4,5)* The sludge results from the addition of diatomaceous earths

*Variations in wastewater treatment systems or in wastewater sources at the two plants may result in different concentrations of toxaphene in the wastewater treatment sludges.

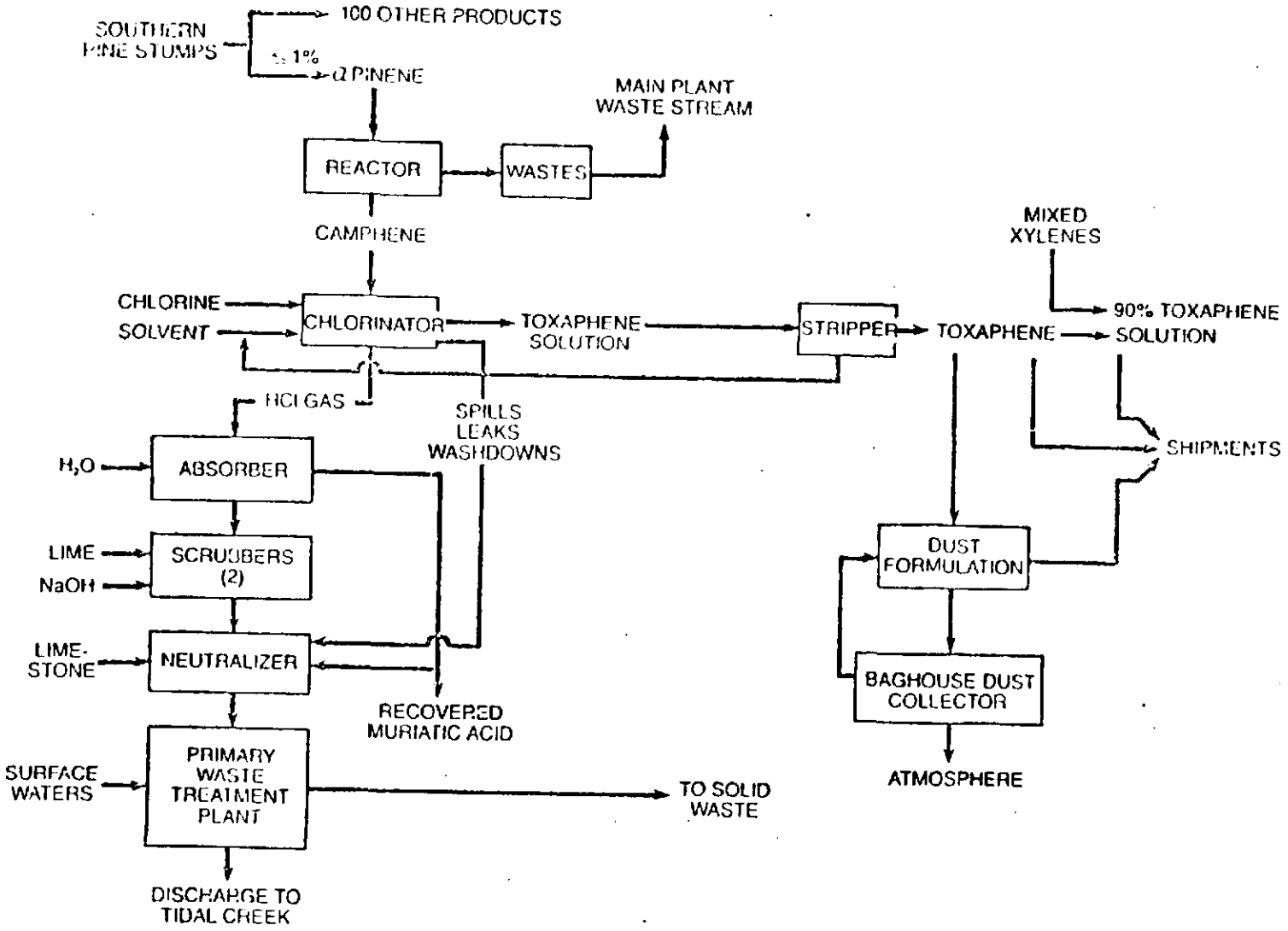

Figure 1. HERCULES' PRODUCTION AND WASTE SCHEMATIC FOR TOXAPHENE (4)

and lime to the wastewater as sorption agents for the removal of toxaphene from the wastewater.(5) The solids are allowed to settle in holding ponds and may remain there for months at a time.(13) After the basin is filled with solids it is taken off line and the sludge is allowed to dry to approximately 50% solids.(5) Analyses of the sludge performed by Hercules indicate that the sludge contains approximately one percent toxaphene by weight, or 10,000 mg toxaphene/kg of sludge.(5) Some 140 lb/day of toxaphene are generated and will be contained in this waste stream.(4,5)

The ultimate destination of the toxaphene wastewater treatment sludge generated at the Hercules plant is a state-approved landfill.(6) The landfill is known as the "009" landfill and is a privately owned site operating under Georgia permit. It is used exclusively for the disposal of the toxaphene wastewater treatment sludge generated at the Hercules Plant.(6) The "009" landfill used for disposal of the Hercules toxaphene wastewater treatment sludge has a bentonite clay liner, and has 6 monitoring wells which are monitored 4 times per year. To date, no toxaphene has been detected in the wells.(6)

At Vertac's Vicksburg plant, the toxaphene-containing process wastewater stream seems to be the bleed stream from the caustic soda scrubber for off-gas cleanup in the HCl absorption and recovery step(3). Analysis of the bleed streams indicated the presence of chloroform at 8 ng/l, carbon tetrachloride at 625 ng/l, chlorobenzene at 146 ng/l, and toxaphene at 33 ng/l(5). These effluent streams, discharged at a flow rate of about 0.63 liters/sec (10 gpm), along with residual toxaphene from

RCRA CONFIDENTIAL
[illegible]
Does Not Contain National
Security Information (E.O. 12065)

past spills, are piped to an equalization pond, and then treated in activated carbon adsorption units(3,5). Wastewater streams from two other pesticide production facilities on site, the dinoseb and atrazine manufacturing plants, are also sent to the same equalization pond and activated carbon units for treatment (3). The activated carbon is sent off-site (to Calgon Corp.) for regeneration. There are no indications that any solids accumulated in the equalization pond have been removed to date.* This pond, or lagoon, is unlined.(14) The treated wastewater is discharged to the Mississippi River.

RCRA CONFIDENTIAL
[illegible] INFORMATION
[illegible]
Scientific Information [illegible]

III. Discussion of Basis for Listing

A. Hazards Posed by the Waste

As noted above, in the Hercules toxaphene wastewater treatment system, an average of 7 tons/day of waste sludge are generated.(4,5) The toxaphene content in the waste sludge is approximately at one percent by weight or 10,000 mg/Kg sludge. High concentrations of toxaphene are undoubtedly present in process wastewater to account for such high concentrations in the sludge.

Toxaphene is an exceptionally dangerous waste consitutent. It is extremely toxic, highly bioaccumulative, and has been reported to cause cancer in laboratory animals. It is also a potent teratogen and has been shown to be mutagenic. Toxaphene is regulated as a toxic pollutant under §307(a) of the Clean Water Act. After an adjudiciative

*No data is currently available on the amount of wastewater treatment sludges (settled solids) generated at the Vertac plant. Nor is any data available on the concentrations of toxaphene in these sludges.

proceeding, a discharge concentration limitation of 1.5 ppb has been established for toxaphene discharges into navigable waters, and this discharge limitation was judicially upheld in Hercules, Inc. v. EPA, 598 F. 2d 91 (D.C. Cir 1978). (The administrative and judicial records are incorporated by reference into this listing background document.) The Agency has also established a national interim primary drinking water standard of .005 mg/l for toxaphene. (That administrative record is likewise incorporated by reference.)

The wastes are listed as toxic based on the potential for waste mismanagement and resulting environmental harm. Toxaphene is both mobile and persistent, having frequently been found in clarified and treated municipal drinking water.(18) Existing waste management methods could lead to release of waste toxaphene. Wastewaters are presently treated in holding ponds. Waste treatment sludge, if generated, is now disposed in landfills and unlined lagoons. Disposal in landfills represents a potential hazard if the landfill is improperly designed or operated. This can result in leaching of hazardous compounds and subsequent contamination of ground water. Disposal in unlined lagoons also represents a potential hazard since the wastes may leach directly into the ground, resulting in possible groundwater contamination. Care must be taken to ensure that the lagoons and landfills used for storage or disposal of the toxaphene product wastes are properly designed and operated (e.g., lined with an appropriate thickness of impervious materials or provided with leachate collection/ treatment systems) to prevent contamination of groundwater or surface water.

Prior to disposal in the "009" landfill, the Hercules plant treats these wastes in holding ponds which, if not properly designed and operated, may result in groundwater or surface water contamination. The high water table and the sandy composition of the soil at the location of the Hercules plant in Brunswick, Ga., make careful managment of these wastes particularly important. (13)*

Wastewater treatment sludge could also create a hazard if improperly managed. Although the sludges appear to be managed properly at the present time (suggesting that industry regards these wastes as hazardous), proper management of an otherwise hazardous waste does not make the waste non-hazardous.

This relates to all instances of toxaphene

One final reason for regulatory concern is noteworthy. Since toxaphene bioaccumulates in environmental receptors by factors of as much as 300,000[7], if only a small amount leaches into the environment, a serious health hazard would be created. In the soil, toxaphene may persist from several months to more than 10 years (soil half-life is 11 years, Appendix B). It has also been shown to persist for up to 9 years in lakes and ponds.[7] Thus, the potential for human exposure is considerable. The potential for substantial hazard is, therefore, very high.

*

The need for the most careful management of toxaphene-containing substances is thus well-establilshed. In light of the documented health and environmental hazards associated with toxaphene, and the fact that substantial hazard is caused by ingestion of extremely small (ppb) toxaphene concentrations, the Agency believes it is justified in listing this waste.

*It should be noted that Hercules' past effluent management practices have not always been adequate, as Hercules has conceded that its past effluent discharge "'had an adverse effect upon the ecology' of local waters." (18)

B. Health and Ecological Effects

1. Toxaphene

Health Effects - Toxaphene is extremely toxic [oral rat LD_{50} = 40 mg/kg].(8) Death in humans from ingestion of this dosage has also been reported. (9) Toxaphene is also lethal to animals by inhalation and skin absorption at dosages of 1 g/kg or less.(10)

This chemical is teratogenic in mice when administered orally at a relatively small dose (350 mg/kg).(11) Toxaphene is carcinogenic in rats and mice, causing a significant increase in the incidence of thyroid and liver cancers when administered in the diet. (12) A significant increase in liver cancer has been reported in mice at dietary levels of 50 ppm.(15)

Toxaphene and its subfractions have been found mutagenic in the standard bacterial assay (S. typhimuriumm, strain TA100). (16)

Ecological Effects - Toxaphene is extremely toxic to fish, and toxic to lower aquatic organisms, birds, and wild animals. The LD_{50} (96-hour) of toxaphene in static bioassays is 3.5, 5.1 and 14 ng/l for bluegills, fathead minnows, and goldfish, respectively.(7) Toxaphene is also capable of producing deleterious effects in fish at levels as low as 0.39 ng/l, and bioaccumulates by factors of as much as 300,000.(7)

Regulations - Toxaphene has an OSHA standard for air, TWA = 500 mg/m^3 (Skin, SCP-F). Toxaphene is listed as a priority pollutant in accordance with §307(a) of the Clean Water Act of 1977. A 0.005 mg/l EPA National Interim Primary Drinking Water Standard has been established for toxaphene.

Industrial Recognition of Hazard - Toxaphene has been rated by Sax, Dangerous Properties of Industrial Materials[15] to be highly toxic through ingestion, inhalation, and skin absorption.

Additional information and specific references on adverse effects of toxaphene can be found in Appendix A.

IV. References

1. 1977 Directory of Chemical Producers. Stanford Research Institute. Menlo Park, California.

2. Proprietary information submitted by Hercules, Inc. to the U.S. Environmental Protection Agency in 1978 response to "308" letter.

3. Proprietary information submitted by Vicksburg Chemical Company to the U.S. Environmental Protection Agency in 1978 response to "308" letter.

4. Meiners, A. F., C.E. Mumma, T. L. Ferguson, and G. L. Kelso. Westwater Treatment Technology Documentation for Toxaphene Manufacture. Report prepared by the Midwest Research Institute for the U.S. Environmental Protection Agency. EPA-400/9-76-013. February 1976.

5. Telephone communication to: Ms. Jennifer Kaduck, State of Georgia, Land Protection Division, Department of Natural Resources, Atlanta, Georgia (404-656-2833), February 28, 1980 (Edward Monnig, TRW).

6. Telephone communication to: Ms. Jennifer Kaduck, State of Georgia, Land Protection Branch, Environmental Protection Division, Department of Natural Resources, Atlanta, Georgia, 12 February 1980. (S. Quinlivan, TRW).

7. Criteria Document for Toxaphene. U.S. Environmental Protection Agency. EPS-440/9-76-0k14. June 1976.

8. Special Publication of Entomoligcal Society of America. College Park, MD, Vol. 74:1 (1974).

9. Clinical Memorandum on Economic Poisons. U.S. Dept. HEW, PHS. COC, Atlanta, GA. p.1, 1956.

10. Council on Pharmacy and Chemistry. Pharmacologic Properties of Toxaphene, a chlorinated Hydrocarbon insecticide. JAMA 149:1135-1137, July 19, 1952.

11. Chernaff, N. and Carber, B.D. Fetal toxicity of toxaphene in rats and mice. Bull. Environ. Contam. Toxicol. 15:660-664, June, 1976.

12. National Cancer Institute. (1977) Guidelines for Carcinogensis Bioassays in Small Rodents. Tec. Rep. No. 1 Publ. No. 017-042-00118-8. U.S. Govn. Print. Office, Washington, D.C.

IV. References (Continued)

13. Telephone Communications to: Ms. Jennifer Kadinck, et al., State of Georgia, Land Protection Division, Department of Natural Resources, Atlanta, Georgia, 8 April 1980. (Robert Karmen, EPA)

14. Telephone Communication: John King (EPA) to Edward Monmig (TRW), 8 April 1980.

15. Litton Bionetics, Inc. Carcinogenic evaluation in mice. Toxaphene Final Report. LBI Project No. 20602. Kensington, MD. Submitted to Hercules, Inc., Wilmington, Del., Nov. 1978.

16. Hill, R.N. (1977) Mutagenicity Testing of Toxaphene Memo dated Dec. 15, 1977, to Fred Hageman. Off. Spec. Pestic. Rev. U.S. Environmental Protection Agency, Washington, D.C.

17. Sax, N. Irving, 1975. Dangerous Properties of Industrial Materials. Fourth Edition, Van Nostrand Reinhold, New York.

18. Hercules, Inc. v. EPA, 598 F. 2d 91, 99 (D.C. Cir. 1978).

19. Lawless, E.W. Pesticide Study Series -5- "The Pollution Potential in Pesticide Manufacturing," Technical Studies Report; TS-00-72-04. Washington, U.S. GPO, 1972.

U.S. DEPARTMENT OF COMMERCE
National Technical Information Service

PB-253 676

Wastewater Treatment Technology Documentation for Toxaphene Manufacture

Midwest Research Inst.

Prepared For
Environmental Protection Agency

February 6, 1976

KEEP UP TO DATE

Between the time you ordered this report—which is only one of the hundreds of thousands in the NTIS information collection available to you—and the time you are reading this message, several *new* reports relevant to your interests probably have entered the collection.

Subscribe to the **Weekly Government Abstracts** series that will bring you summaries of new reports *as soon as they are received by NTIS* from the originators of the research. The WGA's are an NTIS weekly newsletter service covering the most recent research findings in 25 areas of industrial, technological, and sociological interest—invaluable information for executives and professionals who must keep up to date.

The executive and professional information service provided by NTIS in the **Weekly Government Abstracts** newsletters will give you thorough and comprehensive coverage of government-conducted or sponsored research activities. And you'll get this important information within two weeks of the time it's released by originating agencies.

WGA newsletters are computer produced and electronically photocomposed to slash the time gap between the release of a report and its availability. *You can learn* about technical innovations immediately—and use them in the most meaningful and productive ways possible for your organization. Please request NTIS-PR-205/PCW for more information.

The weekly newsletter series will keep you current. But *learn what you have missed in the past* by ordering a computer **NTISearch** of all the research reports in your area of interest, dating as far back as 1964, if you wish. Please request NTIS-PR-186/PCN for more information.

WRITE: Managing Editor
5285 Port Royal Road
Springfield, VA 22161

Keep Up To Date With SRIM

SRIM (Selected Research in Microfiche) provides you with regular, automatic distribution of the complete texts of NTIS research reports *only* in the subject areas you select. SRIM covers almost all Government research reports by subject area and/or the originating Federal or local government agency. You may subscribe by any category or subcategory of our WGA **(Weekly Government Abstracts)** or **Government Reports Announcements and Index** categories, or to the reports issued by a particular agency such as the Department of Defense, Federal Energy Administration, or Environmental Protection Agency. Other options that will give you greater selectivity are available on request.

The cost of SRIM service is only 45¢ domestic (60¢ foreign) for each complete microfiched report. Your SRIM service begins as soon as your order is received and processed and you will receive biweekly shipments thereafter. If you wish, your service will be backdated to furnish you microfiche of reports issued earlier.

Because of contractual arrangements with several Special Technology Groups, not all NTIS reports are distributed in the SRIM program. You will receive a notice in your microfiche shipments identifying the exceptionally priced reports not available through SRIM.

A deposit account with NTIS is required before this service can be initiated. If you have specific questions concerning this service, please call (703) 451-1558, or write NTIS, attention SRIM Product Manager.

This information product distributed by

NTIS U.S. DEPARTMENT OF COMMERCE
National Technical Information Service
5285 Port Royal Road
Springfield, Virginia 22161

176123

PB 253 676

MRI REPORT

EPA-440/9-76-013

WASTEWATER TREATMENT TECHNOLOGY DOCUMENTATION FOR TOXAPHENE MANUFACTURE

FINAL REPORT
February 6, 1976

Contract No. 68-01-3524
MRI Project No. 4127-C

EPA Project Officer
Mr. Ralph H. Holtje

REPRODUCED BY
NATIONAL TECHNICAL
INFORMATION SERVICE
U. S. DEPARTMENT OF COMMERCE
SPRINGFIELD, VA. 22161

For

Office of Water Planning and Standards
U.S. Environmental Protection Agency
Waterside Mall, Room 2834
Mail Stop WH595
401 M Street, S.W.
Washington, D.C. 20460

BIBLIOGRAPHIC DATA SHEET	1. Report No. EPA-440/9-76-013	2.	3. Recipient's Accession No.
4. Title and Subtitle Wastewater Treatment Technology Documentation, Manufacture of Toxaphene			5. Report Date Pub. June 1976 6.
7. Author(s) A. F. Meiners, C. E. Mumma, T. L. Ferguson, and G. L. Kelso			8. Performing Organization Rept. No. 4127-C
9. Performing Organization Name and Address Midwest Research Institute 425 Volker Boulevard Kansas City, Missouri 64110			10. Project/Task/Work Unit No. 11. Contract/Grant No. 68-01-3524
12. Sponsoring Organization Name and Address Office of Water Planning and Standards U.S. Environmental Protection Agency 401 M Street, S.W. Washington, D. C. 20460			13. Type of Report & Period Covered 14. Interim Report, Edited

15. Supplementary Notes

Some editing was performed by EPA.

16. Abstracts

This report was prepared to provide technologic supporting information for toxic pollutant effluent standards proposed by EPA under §307(a) of the Federal Water Pollution Control Act Amendments of 1972. The report identifies potential technologies, assesses implementation feasibility, estimates final effluent characteristics and estimates installation and operation costs for Toxaphene manufacturers.

17. Key Words and Document Analysis. 17a. Descriptors

Wastewater
Waste Treatment
Cost Analysis
Cost Comparison
Pesticides
Manufacturers

17b. Identifiers/Open-Ended Terms

Toxic Pollutant Effluent Standards
Federal Water Pollution Control Act

PRICES SUBJECT TO CHANGE

17c. COSATI Field/Group

18. Availability Statement Release unlimited	19. Security Class (This Report) UNCLASSIFIED	21. No. of Pages 147
	20. Security Class (This Page) UNCLASSIFIED	22. Price

FORM NTIS-35 (REV. 10-73) ENDORSED BY ANSI AND UNESCO. THIS FORM MAY BE REPRODUCED USCOMM-DC 8265-P74

WASTEWATER TREATMENT TECHNOLOGY DOCUMENTATION FOR TOXAPHENE MANUFACTURE

by

Midwest Research Institute
425 Volker Boulevard
Kansas City, Missouri 64110

FINAL REPORT
February 6, 1976

Contract No. 68-01-3524
MRI Project No. 4127-C

EPA Project Officer
Mr. Ralph H. Holtje

For

Office of Water Planning and Standards
U.S. Environmental Protection Agency
Waterside Mall, Room 2834
Mail Stop WH595
401 M Street, S.W.
Washington, D.C. 20460

PREFACE

This is one of four reports on pesticide-containing wastewaters prepared by Midwest Research Institute for the Office of Water Planning and Standards. These reports concern the wastewater treatment technology involved in the manufacture of aldrin/dieldrin, endrin, toxaphene, and DDT. This report is concerned with toxaphene.

These reports were prepared by Dr. Alfred F. Meiners, Mr. Charles E. Mumma, Mr. Thomas L. Ferguson, and Mr. Gary L. Kelso. This program (MRI Project No. 4127-C) has been under the general supervision of Dr. Edward W. Lawless, Head, Technology Assessment Section. Dr. Frank C. Fowler, President, Research Engineers, Inc., and Mr. William L. Bell, President, Arlington Blending and Packaging, acted as consultants to the program.

Approved for:

MIDWEST RESEARCH INSITUTE

L. J. Shannon

L. J. Shannon, Assistant Director
Physical Sciences Division

February 6, 1976

INTRODUCTION

Midwest Research Institute (MRI) has performed a comprehensive examination of the wastewater treatment technology applicable to aldrin/dieldrin, endrin, DDT, and toxaphene. The work was performed for the Environmental Protection Agency (EPA) under Contract No. 68-01-3524.

The basic objectives of the program were: (a) to perform an examination of the wastewater management practices currently employed in the manufacture of the specified pesticide; (b) to examine the state of the art of potential wastewater treatment processes that might be applicable to this industry; and (c) to select those processes that would be applicable to EPA toxic pollutant control technology requirements. Of special interest was the cost of existing and proposed wastewater treatment methods.

This report concerns the wastewater treatment technology for toxaphene manufacture.

CONTENTS

		Page
List of Tables		vi
List of Figures		vii
	TOXAPHENE MANUFACTURE	
Sections		
I	Summary	1
II	Characterization of Industry	7
	Hercules, Inc.	7
	Tenneco Chemicals, Inc.	24
	Riverside Chemical Company	32
	Vicksburg Chemical Company	38
III	Alternate Systems for Removing Toxaphene from Wastewater	45
	Present Status of Alternate Systems for Treating Toxaphene Wastewaters	45
	The Feasibility of Alternate Systems for Removing Toxaphene from Wastewater	48
	Flow Diagrams of Alternate Systems for Removing Toxaphene from Wastewater	54
	Possibilities for Zero Discharge in Toxaphene Manufacture	65
	Comparison of Effluents Produced by Alternate Treatment Systems with Effluent Limitations Guidelines	67

CONTENTS (continued)

		Page
IV	Wastewater Treatment Cost Estimates.	70
	Estimated Cost of Presently Used Wastewater Treatment Systems.	70
	Estimated Cost of Alternate Toxaphene Wastewater Treatment Systems.	71
	References	111

Appendix A - Engineering Information Pertinent to Toxaphene Waste Treatment at the Hercules, Inc., Plant at Brunswick, Georgia.

Appendix B - Definition of Terms and Discussion of Conventional Engineering Practices Used in Estimating Costs of Pesticide Wastewater Treatment Processes.

TABLES

No.	Title	Page
	TOXAPHENE MANUFACTURE	
1	Summary of Production Rates and Wastewater Characteristics For Toxaphene Manufacture.	8
2	Toxaphene Wastewater Effluent Data, Hercules, Inc., Brunswick, Georgia	18
3	Data From Hercules' Monthly Discharge Reports for NPDES Permit No. GA 0003735 at Brunswick, Georgia, Plant-- June 29 to August 28, 1975 (Outfall No. 001)	19
4	Chemical and Physical Properties of Endrin and Toxaphene.	50
5	Summary of Cumulative Pesticide Removal at 10-PPB Load . .	64
6	Effluent Limitations Guidelines for Halogenated Organic Pesticides (Tentative Recommendations)	69
7	Installed Capital Equipment Cost for the XAD-4 Resin System, The Reductive Degradation System, and the XAD-4 Resin System and Reductive Degradation System in Series	85
8	Total Investment Cost and Annual Operating Cost for Three Toxaphene Wastewater Treatment Systems Treating Either 200 or 300 Gal/Min Wastewater Effluent	93
9	Installed Capital Equipment Cost for the 300 GPM Carbon Adsorption System.	103
10	Estimated Total Investment and Annual Operating Costs For Granular Activated Carbon Adsorption Systems	110

FIGURES

No.	Title	Page
	TOXAPHENE MANUFACTURE	
1	Hercules' Production and Waste Schematic for Toxaphene . .	11
2	Hercules' Toxaphene Treatment System at Brunswick, Georgia.	15
3	Schematic Flow Diagram--Manufacture of Toxaphene (Strobane®-T) by Tenneco Chemicals, Fords, New Jersey. .	26
4	Schematic of Water Flow--Riverside Chemical Company, Port Neches, Texas	36
5	Toxaphene Production Schematic--Vicksburg Chemical Company, Vicksburg, Mississippi.	40
6	Effluent Treatment Process--Vicksburg Chemical Company, Vicksburg, Mississippi	43
7	Liquid Waste Disposal System--Vicksburg Chemical Company, Vicksburg, Mississippi	44
8	Simplified Adsorption Summary - Toxaphene.	53
9	Design Flow Diagram of Amberlite XAD-4 Resin System. . . .	56
10	Design Flow Diagram of Reductive Degradation System. . . .	57
11	Design Flow Diagram of Amberlite XAD-4 Resin System and Reductive Degradation System in Series	58
12	Design Flow Diagram for a Carbon Adsorption System	59

SECTION I

SUMMARY

Toxaphene (chlorinated camphene) is produced in the United States by four companies: Hercules, Inc. (at Brunswick, Georgia); Tenneco Chemicals, Inc. (at Fords, New Jersey); Riverside Chemical Company (at Groves, Texas) and Vicksburg Chemical Company (at Vicksburg, Mississippi). Actual toxaphene production rates are not available; however, total production in the United States is estimated to be 80 to 110 million pounds.

Toxaphene is produced in essentially the same manner by all domestic producers, that is, by the chlorination of camphene. This production method results in the formation of relatively large quantities of by-product hydrogen chloride (about 0.5 lb/lb toxaphene). The hydrogen chloride is absorbed in water, generating hydrochloric acid. The generation of the acid creates a major disposal problem. Tenneco, Riverside, and Vicksburg have reported that they sell practically all of the acid generated. Hercules neutralizes and discharges a large portion of the acid generated. A summary of toxaphene production and wastewater characteristics is presented below.

	Estimated 1975 toxaphene production (millions of pounds)	Average wastewater flow from toxaphene production		Average daily toxaphene discharge in plant effluent	
		gpm	gal/lb product	lb/day	ppb
Hercules	50-80	167	1.1-1.8	0.27	114
Tenneco	9-11	0.07	0.003-0.004	< 0.05	< 6
Riverside	8-10	5.8	0.30-0.38	0.032	320
Vicksburg	9-11	10	0.48-0.58	Unknown	Unknown

Information sources and methods for calculating the above data are detailed in the report.

The above data show that Hercules produces a relatively large quantity of wastewater compared to the other producers. Hercules employs a toxaphene wastewater system which includes neutralization of by-product hydrogen chloride followed by adsorption and sedimentation processes. The other manufacturers sell practically all of the by-product hydrogen chloride as hydrochloric (muriatic) acid. The wastewaters generated by Tenneco, Riverside, and Vicksburg are primarily spent caustic liquor from scrubbers used to absorb excess hydrogen chloride in the hydrochloric acid production process. The volume of spent caustic liquor is very small compared to the volume of neutralized hydrochloric acid produced by Hercules.

Because of the relatively large quantity of water produced by Hercules, and also because of the relatively high concentration of toxaphene in this wastewater, alternate methods may be required for treating the Hercules effluent. Four treatment systems appear to be the most promising for this purpose: (a) a resin adsorption system, (b) a reductive degradation system,

(c) the resin adsorption and reductive degradation systems in series, and (d) an activated carbon adsorption system. These systems have been examined in this report for their potential usefulness in the treatment of wastewater from the Hercules manufacturing process. The characteristics of this wastewater have been examined and estimates have been made of the expected quality of the effluents produced by the application of each alternate treatment system to this wastewater.

Only laboratory-scale data are available concerning the applicability of these alternate systems to toxaphene wastewaters. None of the alternate systems have been operated under conditions which approximate actual use, nor have they been developed to the point where a determination of operating conditions or costs can be made with a high level of confidence. However, MRI believes that these treatment systems would be technically feasible based upon (a) the limited available experimental data concerning the effectiveness of these treatment systems in removing toxaphene and related compounds from water, (b) the opinions of experienced research personnel, and (c) a consideration of the similar chemical and physical properties of toxaphene compared to those of other chlorinated pesticides which have been demonstratably removed from wastewater.

The wastewater treatment system at Hercules has been examined in some detail. The cost of the existing system at Hercules and the costs of the four alternate wastewater treatment systems have been estimated. Cost estimates have been made for two flow rates, 200 and 300 gpm; these flow rates

are (a) the approximate average effluent flow rate to the present treatment system, and (b) the design flow capacity of that system. The quality of the present effluent has been compared to the expected quality of the effluent from each alternate system. This information concerning effluent quality and costs is summarized on the following page.

The cost estimates were based upon conceptual systems which required initial sedimentation and filtration steps. Since the present Hercules system employs sedimentation, a question arises concerning whether or not the estimated costs of the alternate systems would be add-on costs for Hercules. If the alternate systems were added to the present Hercules system, no additional sedimentation step would probably be required because of the extensive sedimentation system in place at Hercules. However, because of the nature of the alternate systems, an additional filtration step would probably be required to remove suspended solids. (The average concentration of suspended solids was 57 ppm between September 1974 and March 1975.) Furthermore, because these solids remained after an extensive sedimentation step, a sophisticated and costly filtration system might be required in order to achieve a substantial reduction of suspended solids.

Sedimentation and filtration represent a significant portion (25 to 45%) of the estimated capital equipment costs for the alternate systems, and the filtration step is four or five times more costly than the sedimentation step. Thus, even though the sedimentation step might be eliminated, the total capital equipment cost would probably not be greatly reduced.

SUMMARY OF ESTIMATED COSTS FOR TOXAPHENE WASTEWATER TREATMENT SYSTEMS
(Hercules Plant, Brunswick, Georgia)

	Wastewater flow rate (gpm)	Toxaphene in treated effluent ppb	Toxaphene in treated effluent lb/day	Installed capital equipment cost	Annual operating cost	Cost per pound of toxaphene product[a/]
Hercules' system	181 (8/74)	203	0.44	$800,000	$300,000	$0.0060
	146 (2/75)	58	0.10	800,000	300,000	0.0060
Resin adsorption	200	1.4	0.0034	586,200	324,300	0.0065
	300	1.4	0.0050	790,400	433,200	0.0087
Reductive degradation	200	< 3	< 0.0072	350,700	154,100	0.0031
	300	< 3	< 0.0108	433,700	181,800	0.0036
Resin adsorption plus reductive degradation	200	0.1	0.0002	731,600	410,300	0.0082
	300	0.1	0.0004	955,900	537,500	0.0108
Activated carbon adsorption						
30 min contact time	300	< 5	< 0.018	617,000	194,200	0.0039
60 min contact time	300	< 5	< 0.018	794,000	232,500	0.0047

a/ Based upon an annual production of 50 million pounds of toxaphene.

Furthermore, if a sophisticated filtration step was required, there might even be an increase in costs. Therefore, we conclude that the estimated costs of each of the alternate systems would be approximately equal to the cost of adding that system to the existing Hercules system.

The effluent from the present Hercules system contains an average of 57 ppm suspended solids and 114 ppb toxaphene (the solubility of toxaphene has been reported to be 400 to 3,000 ppb). Estimates indicate that the concentration of toxaphene in the precipitated sludge is approximately 0.02%. If it is presumed that the amount of toxaphene adsorbed on the suspended solids is about the same as the amount adsorbed on the sludge, a 10% reduction in the amount of toxaphene in the effluent would be achievable if the suspended solids could be completely removed from the effluent stream.

Very few data are available upon which to base the design of a filtration system which would accomplish the removal of the suspended solids. If a simple sand filtration system is sufficient, the estimated capital equipment cost would be $130,000 to $160,000. If fine filtration is required, the estimated capital equipment cost would be about $225,000, but a sand filtration system would probably also be required as an initial step. Operating costs for each of these systems would be approximately 15% of the capital equipment cost.

SECTION II

CHARACTERIZATION OF INDUSTRY

Toxaphene (chlorinated camphene) is produced at four plants in the United States which differ considerably in their operating characteristics. A summary of production rates, average wastewater flows and average daily toxaphene discharges is presented in Table 1. Detailed descriptions of these plants and their wastewater operations are presented in the following four sections.

HERCULES, INC.

General

The Hercules, Inc., chemical plant at Brunswick, Georgia, is about 50 years old (Ferguson and Mumma, August 1975). The plant produces about 120 products (SIC 2861 and SIC 2879-secondary) and the principal raw material is pine stumps (Ferguson and Mumma, August 1975).

The Hercules plant produces resin, terpenes and their derivatives from pine stumps. The plant uses from 1,000 to 1,900 tons of stumps per day. The stumps are washed, ground into chips and stored. The chips are then extracted with a solvent (methyl isobutyl ketone) under heat and pressure. The mixture of solvent and dissolved resin is drained from the

Table 1. SUMMARY OF PRODUCTION RATES AND WASTEWATER CHARACTERISTICS FOR TOXAPHENE MANUFACTURERS

	Estimated 1975 toxaphene production (millions of pounds)	Average wastewater flow from toxaphene production		Average daily toxaphene discharge in plant effluent	
		gpm	gal/lb of product	lb/day	ppb
Hercules	50-80[a]	167[b]	1.10-1.75[c]	0.27[d]	114[b]
Tenneco	9-11[a]	0.07[e]	0.003-0.004[c]	< 0.05[b]	< 6[e]
Riverside	8-10[a]	5.8[g]	0.30-0.38[c]	0.032[h]	320[h]
Vicksburg	9-11[a]	10.0[i]	0.48-0.58[c]	Unknown	Unknown

a/ MRI estimate.
b/ Hicks (1975). See Table 2.
c/ Calculated from production estimates and wastewater flow rate.
d/ Calculated from data of Hicks (1975). See Table 2.
e/ Worley (1975).
f/ Calculated from "Commingled" waste stream (003) flow rate (1.01 million gallons per day) and average toxaphene concentration < 6 ppb (Worley, 1975).
g/ NPDES, TX0062448 (1975).
h/ The NPDES discharge limitation (TX0062448) is 0.04 lb/day. September 1975 analytical data supplied by a Riverside representative indicates an average monthly discharge of 0.032 lb/day. On the basis of a 12,000 gal/day (5.8 gpm) discharge, the calculated toxaphene concentration is 320 ppb.
i/ Enviro-Labs (1975). See text concerning Vicksburg wastewater characteristics.

extractors and pumped to the refinery. The spent chips are burned in the power plant boilers. Solvent, turpentine, and pine oil are removed from the mixture by distillation. The crude rosin is subsequently refined further into rosin derivatives. The solvent is recovered and returned to the extractor. Mixed turpentine and pine oil are routed to the still house for further separating and fractionating. Toxaphene insecticide is manufactured from α-pinene in a separate process (Lair and Bruner, 1975).

Normally, the plant operates 7 days/week, 24 hr/day. However, since the latter part of February 1975, the plant has been operating on a split 10-day-on 4-day-off schedule as follows (Lair and Bruner, 1975):

- Primary operations (wood milling, extraction, and main portion of the power hours) continuous until February 28, then the 10 day working schedule commencing March 5, 1975.
- Secondary operations (toxaphene plant, and other conversion operations) continuous until February 23, then the 10 day working schedule commencing February 26, 1975.

Toxaphene Manufacture

Hercules, Inc., has produced toxaphene at the Brunswick, Georgia, plant since 1948 and was its first manufacturer. Hercules' patents on toxaphene expired in the late 1960's.

The estimated annual production of toxaphene at the Hercules plant in 1975 is 50 to 80 million pounds (MRI estimate).

Toxaphene is produced in a series of steps beginning with the raw material α-pinene, which is extracted from pulverized resinous southern pine stumps. Alpha pinene is heated over a catalyst of benzoyl peroxide to form camphene plus bornylene and some α-terpineol which are then chlorinated by liquid chlorine in carbon tetrachloride to produce yellow waxy toxaphene. About two thirds of the final weight of toxaphene is chlorine. Approximately 7 moles of chlorine gas are required per mole of camphene to produce a mole of toxaphene and 6 moles of hydrochloric acid (Ferguson and Meiners, 1974).

The production chemistry for toxaphene manufacture is shown in the following equation (Ferguson and Meiners, 1974):

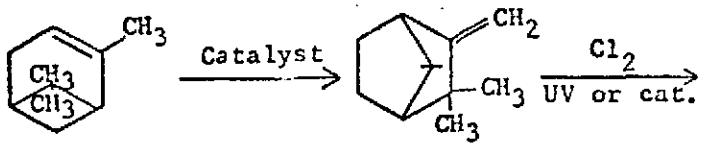

α-Pinene

Camphene

Toxaphene (mixed isomers and related compounds 67-69% Cl)

A production and waste schematic for Hercules' toxaphene process is shown in Figure 1.

Jett (1975) has reported that Hercules' hydrochloric acid (muriatic acid) by-product is either sold or neutralized. Hicks (1975) has reported that the sources of the process water are deep wells.

Other information concerning toxaphene manufacture at Hercules is shown as follows (Ferguson and Meiners, 1974).

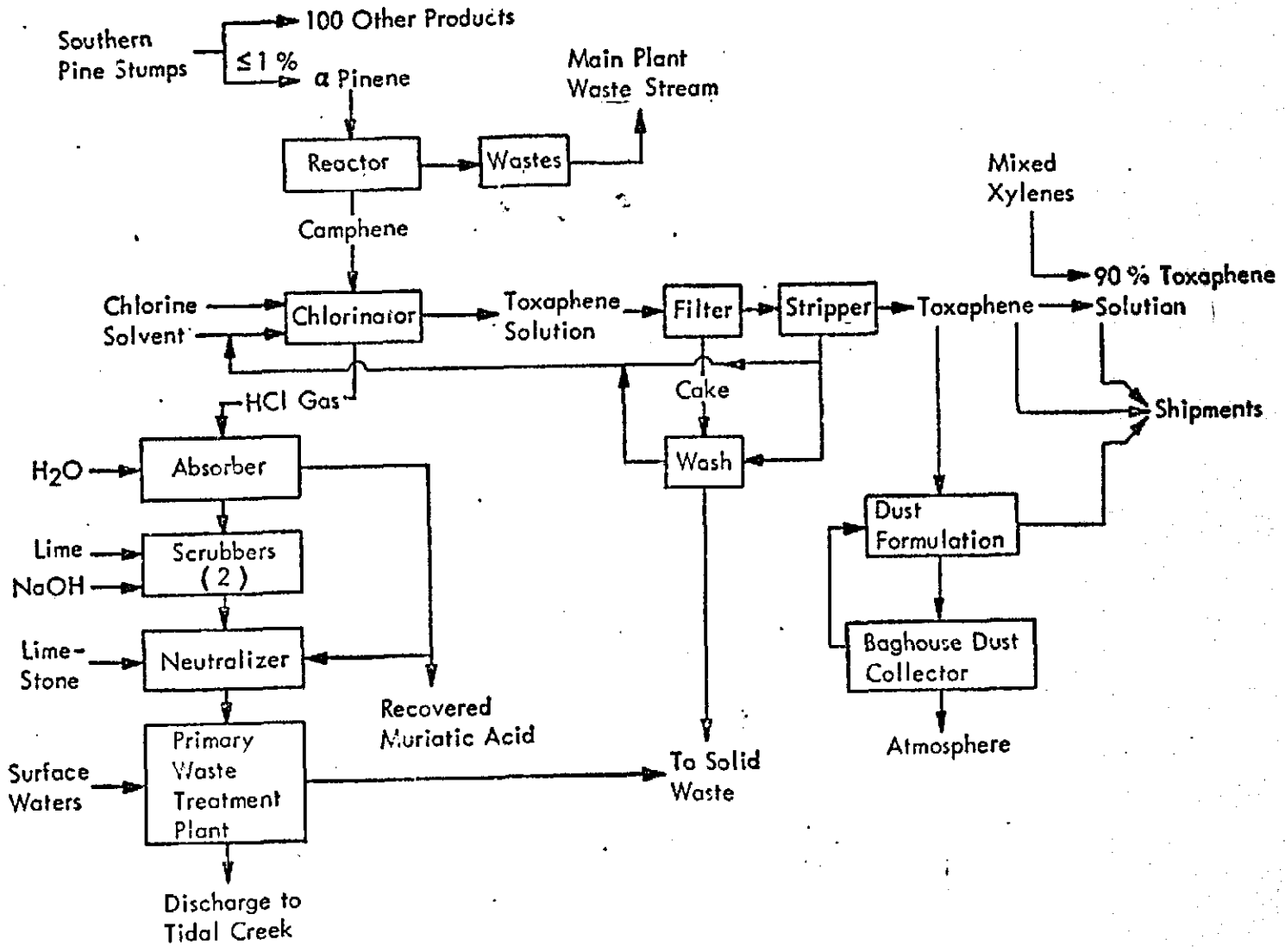

Source: Ferguson and Meiners (1974)

Figure 1. Hercules' production and waste schematic for toxaphene

Raw Materials (Ferguson and Meiners, 1974)

	Material	Received From	Received By	Storage
1.	Camphene	On site from α-pinene		
2.	Cl_2	Six local sources	Tank cars	
3.	Solvent		Tank cars	Tanks
4.	Clay	Georgia	Rail	Silo
5.	NaOH	Georgia	Tank truck	Tanks
6.	Limestone	Georgia	Rail	Silo
7.	Slaked lime	Georgia	Rail	Warehouse

Reaction By-Products (Ferguson and Meiners, 1974)

	Material	Form	Amount Produced (lb/lb AI)	Disposition
1.	HCl	Solution in water	0.53	Sold or neutralized

Other Process Wastes and Losses (Ferguson and Meiners, 1974)

	Materials	Form	Disposition
1.	Active ingredient	Liquid or solid	Waste treatment system
2.	Solvents		
3.	Camphene production	Liquid	Discharge to tidal creek
4.	Waste from scrubbers		Waste treatment system

Disposition of Technical and Formulated Products (Ferguson and Meiners, 1974)

	Shipments				
	Technical Product		Formulated Products		
Warehouse Elsewhere	Container	Transportation	Formulation	Container	Transportation
X	% Small amount, 250 gal. galvanized drums	Exported via East coast	% Most, 90% concentrate; 10% xylene	Tanks, 55 gal., 50-lb bags pelletized	Rail and truck exports

Wastewater Treatment System*

On March 15, 1974, Richard E. Chaddock stated that the Hercules' waste treatment system was based upon the principle that toxaphene in aqueous media adsorbs very strongly to particulates, especially those of soil. In this system, the waste stream to the treatment lagoon is neutralized and the pH carefully controlled (Chaddock, 1974). The inert solids were reported "to consist chiefly of sand, clay and insoluble hydroxides and carbonates." The toxaphene, "strongly adhering to the inert solids, settles out in several lagoons connected in series" (Chaddock, 1974). Data on the "irreversibility" of toxaphene adsorption has been reported by Wisconsin scientists in a study of fish poisoning (Hughes et al., 1970).

On June 24, 1975, Hicks reported that the toxaphene waste treatment system is a physical/chemical system (Hicks, 1975). Hicks (1975) also reported that residual toxaphene is removed from the wastewater by adsorption on inorganic particulate matter and neutralized. Hicks reported that "this process was selected as the best for toxaphene removal and implemented following extensive testing of other methods such as heat treatment, solvent extraction, and the use of other adsorptive media" (Hicks, 1975).

* Additional information concerning the Hercules' waste treatment system is provided in Appendix A. The information contained in Appendix A was obtained from an engineering report supplied by Mr. C. L. Dunn, Manager, Ecological Research, Hercules, Inc., to Mr. Richard K. Ballentine, Toxic Substances Branch, EPA, on December 16, 1975. This information was not received in time to be incorporated into the toxaphene manufacture report.

A schematic diagram of the Hercules toxaphene wastewater treatment system at Brunswick, Georgia, is shown in Figure 2. Hicks (1975) has reported that these treatment facilities were built during 1971 to 1974.

Hercules uses a separate treatment system exclusively for wastewater from its toxaphene plant (Ferguson and Mumma, August 1975). Wastewaters from the toxaphene plant are neutralized with caustic and limestone and then pumped into the treatment system shown in Figure 2. This treatment system consists of a distribution pond, four settling ponds (each pond is about 200 ft x 400 ft x 3 ft deep) and a pond used to collect storm water from the toxaphene manufacturing area. A Parshall flume and automatic sampler are used to monitor the effluent from the toxaphene treatment system.

Lair and Bruner (1975) have reported that the Brunswick plant discharges cooling waters, effluent from the toxaphene treatment system, and effluent from the milling powerhouse area treatment system. Discharge is into two ditches, designated by the company as the north and south ditches (Figure 2). These ditches join to form the plant's main outfall (designated 001 on the NPDES Permit No. GA 0003735 (1974)). The combined discharge is into Dupree Creek. Sanitary wastewaters from approximately 950 employees and process wastewaters from the plant's pretreatment facility are discharged into the Brunswick, Georgia, municipal sewerage system (Lair and Bruner, 1975).

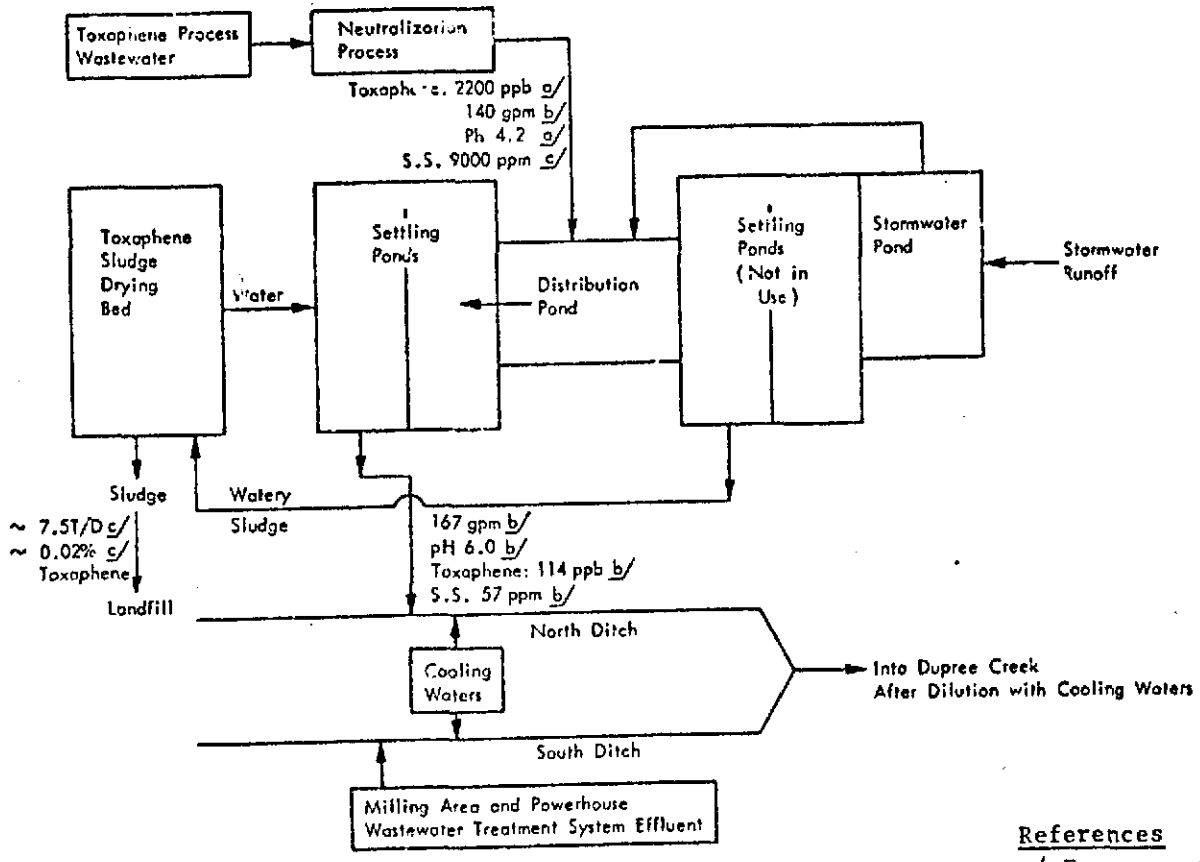

References

a/ Ferguson and Meiners (1974).
b/ Hicks (1975).
c/ MRI estimate.

Source: Adapted from Lair and Bruner (1975).
Ferguson and Meiners (1974).

Figure 2. Hercules' toxaphene treatment system at Brunswick, Georgia

Lair and Bruner (1975) have reported that wastewaters from the toxaphene area floor drains and product loading area drains are pumped into the distribution pond along with the toxaphene plant process wastes.

Storm water from the toxaphene production area is pumped to the special storm water pond. Storm waters are pumped slowly from the toxaphene storm water pond into the distribution pond and ultimately into the settling ponds. As indicated in Figure 2, effluent from the settling pond is discharged into the north ditch.

The cooling waters from the toxaphene production area are discharged separately into the north ditch. Jett (1975) has reported that all cooling water is noncontact.

Steam and electricity are generated in a separate remote area so there is no boiler blowdown in the toxaphene area (Hicks, 1975).

Only two of the four settling ponds are used at any one time. Whenever the settling ponds fill up with solids and treatment efficiency decreases, the ponds are taken out of service and the remaining two ponds are placed in service. The ponds that are out of service are allowed to dewater and the solids are dredged into a separate sludge drying bed and air dried. Any drainage from the sludge drying bed is sent to the settling ponds in service. All of the solids recovered from the toxaphene wastewater are retained in the lagoon system or related drying beds; the estimated total accumulation rate of solids is 5 to 10 tons/day (Hicks, 1975).

Wastewater Characteristics

Hicks (1975) has reported that the average influent flow rate to the Hercules' toxaphene wastewater treatment systems at Brunswick, Georgia, is 200 gpm and that the treatment system has a design flow capacity of 300 gpm. Effluent data obtained between April 1974 and March 1975 is presented in Table 2.

Daily samples taken by Hercules between April 1974 and March 1975, when the flow averaged 167 gpm, showed that the treated effluent discharged into the north ditch had the following average characteristics: (a) pH, 6.0; (b) suspended solids, 57 ppm; and (c) toxaphene concentration, 114 ppb (Hicks, 1975). These statistics are shown in Figure 2 and are the most recent information available.

Under the NPDES Permit No. GA 0003735 (NPDES, 1974), Hercules, Inc., issues monthly discharge reports (Outfall No. 001) to the Environmental Protection Agency, Water Enforcement Branch in Atlanta, Georgia. Jett (1975) has reported that the waste in the 001 outfall includes (a) the treated toxaphene waste stream, (b) unprocessed pine stump wash water which has been clarified, and (c) noncontact cooling water. Data taken from monthly discharge reports, presented in Table 3 show the quantity and and quality of the discharged effluent from Outfall No. 001 for the period of June 29 to August 28, 1975. The average daily discharge of toxaphene during this period ranged from 0.045 to 0.35 lb/day.

Table 2. TOXAPHENE WASTEWATER EFFLUENT DATA
HERCULES, INC., BRUNSWICK, GEORGIA

Month	Average treated effluent flow (gpm)	Average of daily pH readings	Average suspended solids (ppm)	Average toxaphene concentration (ppb)
April 1974	-	6.4	-	104
May 1974	181	4.4	-	93
June 1974	181	4.9	-	81
July 1974	-	5.0	-	176
August 1974	181	6.2	-	203
September 1974	194	6.5	83	125
October 1974	181	6.9	71	99
November 1974	167	6.9	81	109
December 1974	139	6.5	71	-
January 1975	153	6.4	47	90
February 1975	146	6.9	32	58
March 1975	167	5.3	12	-
Overall average	167	6.0	57	114

Source: Hicks (1975).

Note: The toxaphene plant was operated continuously from January 1 to February 23, 1975; then on an intermittant schedule (10 days on-stream and 4 days off) commencing February 26, 1975 (Lair and Bruner, 1975).

Table 3. DATA FROM HERCULES' MONTHLY DISCHARGE REPORTS FOR NPDES PERMIT NO. GA 0003735 AT BRUNSWICK, GEORGIA, PLANT--JUNE 29 TO AUGUST 28, 1975 (Outfall No. 001)

Reporting period: Parameter	Units		June 29-July 28, 1975 Minimum	Average	Maximum	July 29-August 28, 1975 Minimum	Average	Maximum
Flow	MGD	Reported	-	3.6	-	-	3.6	-
		Permit condition	-	-	-	-	-	-
Toxaphene	Lb/day	Reported	-	0.45	1.06	-	0.35	0.99
		Permit condition	-	-	1.0	-	-	1.0
Suspended solids	Lb/day	Reported	-	422	960	-	405	900
		Permit condition	-	9,000	27,000	-	9,000	27,000
pH		Reported	6.6	7.1	7.5	6.6	7.4	8.1
		Permit condition	6.0	-	9.0	6.0	-	9.0

Further tests during March 3 to March 6, 1975 (Lair, 1975) showed that the effluent into Dupree Creek had a flow of 16.5 million gpd, a pH of 7.5 and a toxaphene concentration of 4 ppb after dilution in the ditches with 16.3 million gallons per day of cooling water.

The Hercules' treatment facilities are reported to have been constructed to reduce the toxaphene content of the plant discharge to less than 1 lb/day (Hicks, 1975). Information provided in the NPDES permit application for the Brunswick plant (NPDES for Permit No. GA 0003735, 1974) indicate that the effluent from the treatment facility has averaged 0.51 lb/day of toxaphene, but the mean toxaphene content of the total plant discharge (Outfall No. 001) has been about 2 lb/day. Hercules states that "the discrepancy is believed to be due in part to runoff from contaminated areas outside the collection system and problems in sampling and analysis. Efforts are being made to minimize the discrepancy and to reduce the toxaphene content of the total plant discharge" (NPDES, 1974).

The concentration of suspended solids in the effluent discharged from the Hercules' neutralization process (see Figure 2) is unknown and no information on this subject could be obtained from the company. On the basis of the data shown in Figure 2, the loading of suspended solids can be estimated as follows.

Given: Wastewater from neutralization process has a flow rate of 140 gpm which is equivalent to 1,683,000 lb/day (Hicks, 1975). Average daily generations of waste sludge is 7.5 tons or 15,000 lb/day (Ferguson and Mumma, 1975)--all derived from solids contained in neutralization wastewater.

Hicks (1975) has reported that the average concentration of suspended solids in the treated toxaphene effluent (discharged to north ditch) during the period of September 1974 to March 1975 was:

$$57 \text{ ppm or } \frac{1,683,000}{10^6} \times 57 = 96 \text{ lb/day}$$

Then, estimated concentrations of suspended solids in effluent from neutralization process is:

$$\frac{15,000 + 96}{1,683,000 \times 10^{-6}} = \sim 9,000 \text{ ppm suspended solids in effluent from neutralization process}$$

The estimated values developed above are included in Figure 2, the schematic for Hercules' toxaphene wastewater treatment system at Brunswick, Georgia.

Sludge Characteristics

In the Hercules' toxaphene wastewater treatment system, a significant amount (average of 7.5 tons/day) of waste sludge or settled solids is generated (Ferguson and Mumma, 1975). However, no information was obtained from Hercules concerning the toxaphene content in the waste sludge.

On the basis of the available data, shown in Table 2, the approximate toxaphene content in this sludge can be estimated as follows:

Given: Wastewater from neutralization process has a flow rate of 140 gpm and contains ~ 2,200 ppb toxaphene. Treated effluent has a flow rate of 169 gpm and contains 114 ppb toxaphene.

For neutralization wastewater:

$$\text{Flow} = 140 \times 60 \times 24 = 201{,}600 \text{ gpd or}$$

$$201{,}600 \times 8.35 \text{ lb/gal} = 1{,}683{,}000 \text{ lb/day}$$

$$\frac{2{,}200 \text{ ppb} \times 1{,}683{,}000}{10^9} = \sim 3.7 \text{ lb toxaphene/day in wastewater}$$

For treated effluent (discharged to north ditch):

$$\text{Flow} = 167 \times 60 \times 24 = 240{,}000 \text{ gpd or}$$

$$240{,}000 \times 8.35 \text{ lb/gal} = 2{,}000{,}000 \text{ lb/day}$$

$$\frac{114 \text{ ppb} \times 2{,}000{,}000}{10^9} = \sim 0.23 \text{ lb toxaphene/day}$$

For waste sludge (7.5 tons/day),

The toxaphene content is estimated to be:

$$\frac{(3.7 - 0.23)}{7.5 \times 2{,}000} \times 100 = \sim 0.02\% \text{ toxaphene in sludge}$$

In-Plant Controls

The toxaphene production area at Hercules is diked so that all liquid wastes (e.g., leaks or spills) are contained and are eventually processed through the wastewater treatment system. All liquid wastes from the toxaphene unit go to a large holding pond and waste treatment system (Ferguson and Meiners, 1974).

At Hercules, process vents are water, caustic, or lye scrubbed before venting to the atmosphere; waste from these scrubbers also goes to the holding pond. Baghouses are used in the dust concentrate unit, which is located in the toxaphene production area. Dust from the collection system is recycled. Short scheduled shutdowns for maintenance are made as needed (Ferguson and Meiners, 1974).

The tank cars, whether owned by the company or by the railroad, are dedicated to toxaphene and are cleaned yearly at the Hercules plant, with the washings going to the toxaphene recycle system and aqueous wastes through the waste treatment systems. Tank trucks are customer- or truck line-owned and are cleaned by the owner (Ferguson and Meiners, 1974).

Effluent Disposal Method

As shown in Figure 2, effluent from the toxaphene wastewater treatment system is discharged to the north ditch along with cooling waters from the Hercules plant. Effluent from the Hercules' milling area and powerhouse wastewater treatment system is discharged along with plant cooling waters to the south ditch. The outflow from these two ditches is joined into a common plant discharge (Outfall No. 001) which enters Dupree Creek.

The final disposal of treated toxaphene wastewater into municipal sewage treatment plants is an option which may be useful in some locations. Hercules has plans to verify the efficacy of this procedure by plant-scale trials at the Brunswick, Georgia, municipal sewage treatment facility. Hercules has funded a research study on the effect of toxaphene on sewage treatment (Black et al., 1971); the report shows that toxaphene can be added to a sewage treatment plant without adverse effects upon normal treatment processes.

Plant Visit

On August 20, 1975, T. L. Ferguson and C. E. Mumma visited the chemical plant of Hercules, Inc., at Brunswick, Georgia, to discuss toxaphene wastewater treatment. The toxaphene wastewater treatment facilities were examined during this visit (Ferguson and Mumma, 1975).

TENNECO CHEMICALS, INC.

General

The Fords New Jersey Plant, of the Organics and Polymers Division, of Tenneco Chemicals, has its origin in the early 1900's. Since that time, it has changed hands and changed names several times.

In 1963, following a series of mergers with Newport Chemical Company and Nuodex the total assets were acquired by Tennessee Gas Transmission Company. In 1965, the name of Tenneco Chemicals was born.

At present, more than 40 chemicals are produced at Fords. Some of the items are bulk chemicals and are produced at rates of 200 million pounds per year. Some are produced at rates of only 200 pounds per day. The final uses for these chemicals vary from flame retardants for children's sleepwear and intermediates for the paint, dye and plastics industry to food preservatives, agricultural sprays and materials for the cosmetic industry. The current product line (SIC 2818) includes chlorinated aromatics and air oxidation products.

Toxaphene is produced, but is not formulated (Meiners and Mumma, 1975a). The toxaphene products at the Fords plant have the Tenneco trade names of

Strobane® T-90 (90% active ingredient) and Strobane®-T (100% active ingredient). Product quantities are considered by Tenneco to be proprietary information and actual production data were not obtained from the company. On the basis of a communication with a Tenneco representative, the estimated annual production of toxaphene at the Fords, New Jersey, plant is about 9 to 11 million pounds per year (Meiners and Mumma, 1975a). The process equipment which is dedicated to production of toxaphene has been operated since 1965; major revisions were made to the plant in 1969. Tenneco operates the toxaphene plant at least 10 months each year.

Manufacturing Process (Worley, 1975)

The toxaphene manufacturing unit is part of a chlorination complex in which several processes are integrated by sharing parts of a larger equipment train.

All plant chlorination processes receive chlorine from a common tank car storage-feed system. In addition, all of the processes also direct by-product HCl off-gas to a centrally located acid plant for eventual recovery.

A process schematic for production of Strobane®-T at the Ford's plant is shown in Figure 3. Points where common ties to other processes are made are indicated in this figure.

Strobane®-T is manufactured by a batch process in which chlorine gas is reacted with a camphene liquid to form a waxy solid containing 67 to 69% chlorine content. The camphene is purchased.

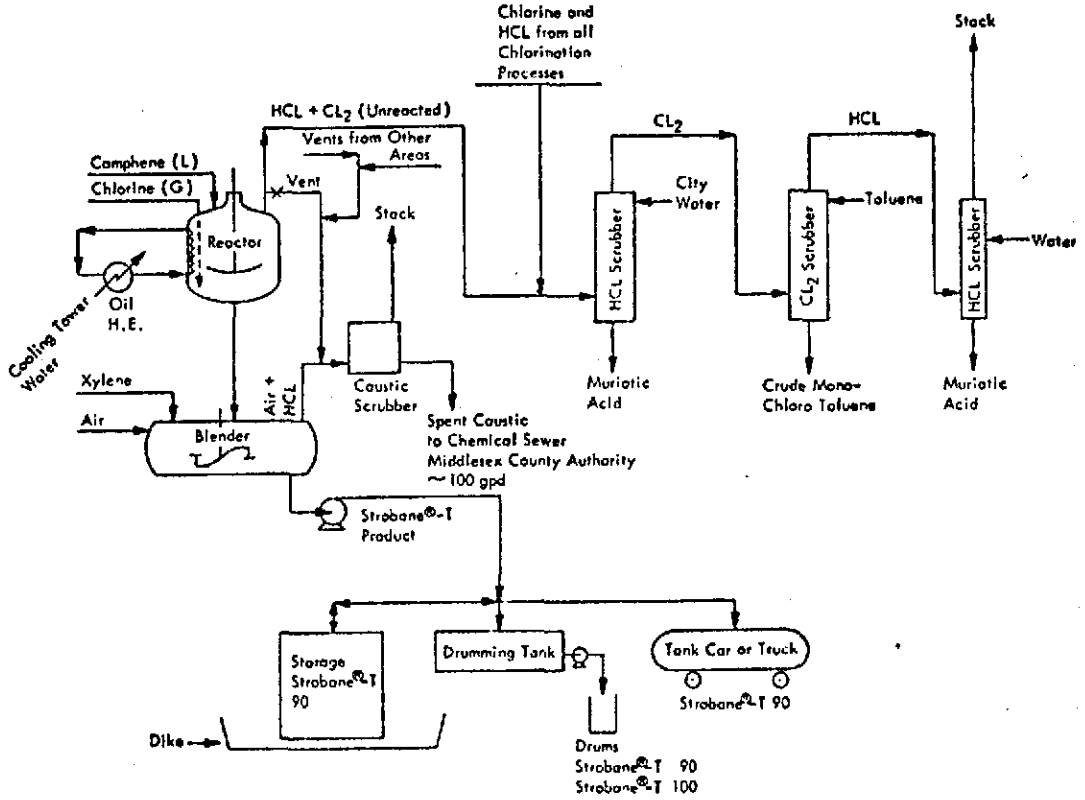

Source: Tenneco Chemicals, Letter from J. W. Worley, Works Manager to Mr. W. J. Hunt, Effluent Guidelines Division, EPA, August 13, 1975.

Figure 3. Schematic flow diagram--manufacture of toxaphene (Strobane®-T) by Tenneco Chemicals, Fords, New Jersey

The chlorination reaction is exothermic. Noncontact cooling is provided with an intermediate oil medium, which in turn is water-cooled in a noncontact heat exchanger.

The chlorination by-product HCl and unreacted chlorine gas are vented from the reactor to an acid plant by an off-gas header, which also receives chlorine and HCl from other processes. Both of these off-gases are recovered as by-products by means of gas scrubbers.

When chlorination is completed, the batch is dropped from the reactor to a blend tank where further physical processing occurs. The residual entrapped gases (of HCl and chlorine) are air-sparged for removal. These gases are subsequently neutralized in a common caustic scrubber which is also used for treatment of gases from other (unrelated) operations in the same plant. All of the reactor contents are collected as the final product. By-product muriatic acid (20° Bé) is sold as commercial product. Crude monochlorotoluene, a by-product of other operations, is also recovered and is consumed internally as an intermediate for other chlorine derivatives.

For the preparation of Strobane®-T-90, xylene is added as a diluent to Strobane®-T in a blending operation. Vent gases from the blender, consisting of air and HCl, are scrubbed by contact with a caustic solution. The scrubbed gas is discharged to a vent stack and the spent caustic liquor (~ 100 gpd) is discharged to a chemical sewer.

The product is drummed, charged into tank cars or tank trucks, or placed in storage tanks. The storage tank areas are diked to contain any spilled or leaked material. About 70% of the product is shipped in 50-gal. drums and the balance is usually shipped in railroad tank cars. Tank trucks are used occasionally to ship product.

Tenneco uses a "dry" production process. The process does not use any contact process water and does not have any washing step. Any water in the vicinity of the manufacturing process equipment does not come in contact with the toxaphene itself which is a "bottoms" product. No distillation operations are conducted.

The primary source of noncontact cooling water is a natural ground-fed stream within the plant boundary. This stream is impounded in a man-made pond which overflows to the Raritan River at an approximate rate of 500,000 gal/day (NPDES, 1972). The pond serves as an evaporation heat sink as the noncontact cooling water is drawn from and returned to this pond at a maximum rate of approximately 3,600 gal/min.

The water used for processing is obtained from the Middlesex Water Company of Edison, New Jersey. Water usage in the toxaphene production unit includes makeup water in the cooling water system and water supplied to the caustic scrubber system which treats vent gases.

Wastewater Characteristics (Worley, 1975)

A representative of Tenneco, Inc. (Worley, 1975), has indicated that there is no process wastewater from the Strobane®-T process.

Process wastewaters from all plant processes are collected and directed to common sewer headers which, in turn, flow to a centrally located in-plant collection sump. These wastes are then neutralized with lime and subsequently discharged to the Middlesex County Sewerage Authority (MCSA). These wastes are then collectively analyzed by the MCSA for the parameters of flow gallons, BOD, suspended solids, and chlorine demand.

The "commingled" waste stream (labeled Stream 003) has an average analysis as follows (Worley, 1975):

Flow	million gal/day	1.01
BOD	mg/liter	1,153
S.S.	mg/liter	382
Chlorine demand	mg/liter	8.89

Runoff water flows to either of two discharge streams labeled 001 and 002 located at opposite ends of the plant. Stream 001 includes both ground-fed water as well as natural runoff. Stream 002 contains runoff water only, and its average flow rate is approximately 30,000 gpd. The flow rate of both of these streams vary, depending on the amount of rainfall.

Discharge streams 001 and 002 are covered by the current NPDES Permit No. N.J. 0000116 (1972). The NPDES permit describes the discharge to the Raritan River. Both Streams 001 and 002 have been checked for toxaphene analyses and the results were negative. Therefore, it appears that fugitive losses to the effluent streams are extremely low, if any. The NPDES

Permit Application No. 2SDOXW2000021 (NPDES, 1972) contains information concerning Stream 003. However, Stream 003 is not included in the NPDES permits because the discharge does not flow to a navigable waterway.

The Middlesex Authority provides a monthly composite sample of the total Tenneco plant waste effluent, discharge Stream 003. This composite represents 20 or more individual samples taken by the MCSA as part of their waste monitoring program.

The monthly composite sample is then sent to an outside concern for their individual analysis for toxaphene content.

A recent history of toxaphene analysis in the total Tenneco plant waste discharge (Stream 003) is presented below.

Monthly Composite	Toxaphene Analyses	Monthly Composite	Toxaphene Analysis
May 1974	< 5.0 ppb	November 1974*	-
June 1974	< 10.0 ppb	December 1974*	-
July 1974	< 5.0 ppb	January 1975	< 10 ppb
August 1974	< 5.0 ppb	February 1975	< 5 ppb
September 1974	< 5.0 ppb	March 1975*	-
October 1974	< 5.0 ppb	April 1975	< 5 ppb

* Samples were not sent out for analyses during these months.
Source: Worley (1975).

These data show that the toxaphene content in the wastewater was always less than 10 ppb and usually less than 5 ppb. The monthly average toxaphene content was less than 6 ppb. Tenneco representatives have pointed out that the analyses represented the limit of detectability and that it is possible that there was no toxaphene in the discharge stream. The analytical

samples included suspended solids, since there is no settling of solids prior to discharge.

Spent caustic is discharged at a rate of about 100 gpd from the caustic scrubber unit used in the toxaphene process. No data are available on the composition of this caustic liquor, but Tenneco representatives have indicated that this stream contains little or no toxaphene (Meiners and Mumma, 1975a).

In-Plant Controls

In-plant pollution controls include the noncontact heat exchange used in the toxaphene process and the use of xylene instead of water to clean out the equipment. The xylene cleaning liquor is recovered and used in the plant.

In the event of on-site product spills, the spill is cleaned up immediately and the incident is reported to the state office of EPA.

A water cooling tower is used in conjunction with the noncontact heat exchange system (see Figure 3) to conserve water and permit water recycling.

Containment dikes are provided in the toxaphene production area and around the product storage tanks to prevent loss of pesticide to the environment. All exhaust gases from processing are treated in gas scrubbers before being vented to the atmosphere.

Wastewater Treatment

No wastewater treatment methods are used by Tenneco for the toxaphene manufacturing operation since no wastewater is discharged from the process.

For the total plant effluent, the type of waste treatment employed consists of segregation of streams, collection, neutralization with lime, and discharge (without settling) to the Middlesex County Sewage Authority (Stream 003). The solids generated are discharged along with the effluent stream; no sludge is accumulated.

The Tenneco waste treatment system is designed for a flow of 2 million gallons per day. The annual operating cost is approximately $240,000 which includes the MCSA treatment costs of $100,000/year. The capital value is approximately $290,000, which includes the most recent upgrading expenditure of $85,000 in 1968. The waste treatment system was originally built in 1958 (Worley, 1975).

Plant Visit

On October 13, 1975, Dr. A. F. Meiners and Mr. C. E. Mumma of MRI visited the toxaphene plant site of Tenneco Chemical, Inc., in Fords, New Jersey. Mr. Stephen J. Jelich, Technical Superintendant, and Mr. W. P. Anderson, Director of Environmental Sciences, were interviewed concerning the toxaphene operations. The manufacturing process and waste treatment facilities were examined during the visit (Meiners and Mumma, 1975a).

RIVERSIDE CHEMICAL COMPANY

General

The original chemical plant at Groves, Texas, was built by Sonford Products Company under government contract for production of chlorinated benzene. Later the plant was used to produce chlorinated phenols. Beginning

about 1967, the plant was used to manufacture toxaphene (Meiners and Mumma, 1975b). It was later assumed and operated by Bison Chemical Company.

On February 5, 1974, this plant was purchased from Bison by Riverside Chemical Company, a subsidiary of Cook Industries, Inc. This company is now in the process of extensive renewal and modernization of the entire production facility, including precautions to prevent accidental discharge of toxaphene.

The Riverside Chemical Company's toxaphene plant at Port Neches, Texas, currently produces about 8 to 10 million pounds per year of toxaphene (the address of the plant is a post office box in Groves, Texas). The production capacity of this toxaphene plant has recently been increased and is now about 12 to 14 million pounds per year. The company also produces chlorinated paraffins (about 6 to 7 million pounds per year) at this plant. Hydrochloric acid, a by-product of these chlorination processes, is also recovered and sold. The plant operates 24 hr/day, 7 days/week (Meiners and Mumma, 1975b).

Manufacturing Process

No detailed information on the process technology was obtained (or requested) by project investigators (Meiners and Mumma, 1975b).

Basically, the process consists of reacting chlorine gas with camphene (maximum chlorination temperature is 350°F) and separating out the by-product HCl and excess chlorine in an off-gas stream which is scrubbed to

recover the by-product acid. Heat generated in the exothermic chlorination reaction is removed by noncontact heat exchangers using cooling water. A cooling water tower is provided. Cooling water is recirculated to the toxaphene plant heat exchanger from this cooling water tower. The by-products of the toxaphene process are hydrochloric acid and probably sodium chlorite from the scrubbers (Meiners and Mumma, 1975b).

Well water is used in the toxaphene plant. About 9,500 gpd are consumed in the toxaphene process. In the recovery process for by-product hydrochloric acid (muriatic acid), 3,50^ gpd of water are used. The hydrochloric acid process produces 3,000 gpd of product (NPDES, TX0062448, 1975).

Wastewater Characteristics

According to their NPDES Permit No. TX0062448 (NPDES, 1975), the company has the effluent limitations shown below.

EFFLUENT LIMITATIONS
RIVERSIDE CHEMICAL COMPANY TOXAPHENE PLANT
GROVES, TEXAS

Effluent Characteristic	Discharge Limitations kg/day (lb/day) Daily Average	Daily Maximum
Toxaphene	0.02 (0.04)	0.03 (0.06)
Biochemical Oxygen Demand (5 day)	4.5 (10)	9 (20)
Chemical Oxygen Demand	27 (60)	45 (100)
Total Suspended Solids	4.5 (10)	9 (20)
Oil and Grease	2 (5)	NA

Source: NPDES (1975)

In addition, the permit specifies a 3.0 mg/liter (as CCl_4) discharge of chlorinated hydrocarbons.

According to the NPDES permit (NPDES, 1975) the plant intake of water is 19,000 gpd. This amount of water is accounted for as follows:

Discharges (gpd)	
Surface Water	2,000
Sanitary Water	500
Evaporation	2,000
Consumption	3,000
Boiler and Cooling Tower Blow Down and Condensate	11,500
Total	19,000

In their NPDES permit (NPDES, 1975), Riverside Chemical Company presented a schematic of water flow as shown in Figure 4. Well water is employed in three processes: (a) 9,500 gpd is used in the toxaphene process; of this, 1,200 gpd is evaporated to the atmosphere, and 8,300 gpd is wastewater which is conducted to a holding pond; (b) 5,500 gpd of well water is used in the paraffin chlorination process; 600 gpd is evaporated to the atmosphere; 4,900 gpd is wastewater which is also conducted to the holding pond; (c) 500 gpd of well water and 3,000 gpd of process water are employed in the hydrochloric acid process which produces 3,000 gpd of product and 300 gpd of wastewater. The total indicated amount of wastewater from the three processes is 13,500 gpd. This plant currently generates 12,000 gpd of wastewater (Meiners and Mumma, 1975b).

The by-product hydrochloric acid is sold to Reagent Chemicals Company which is located near the Riverside plant (Meiners and Mumma, 1975b).

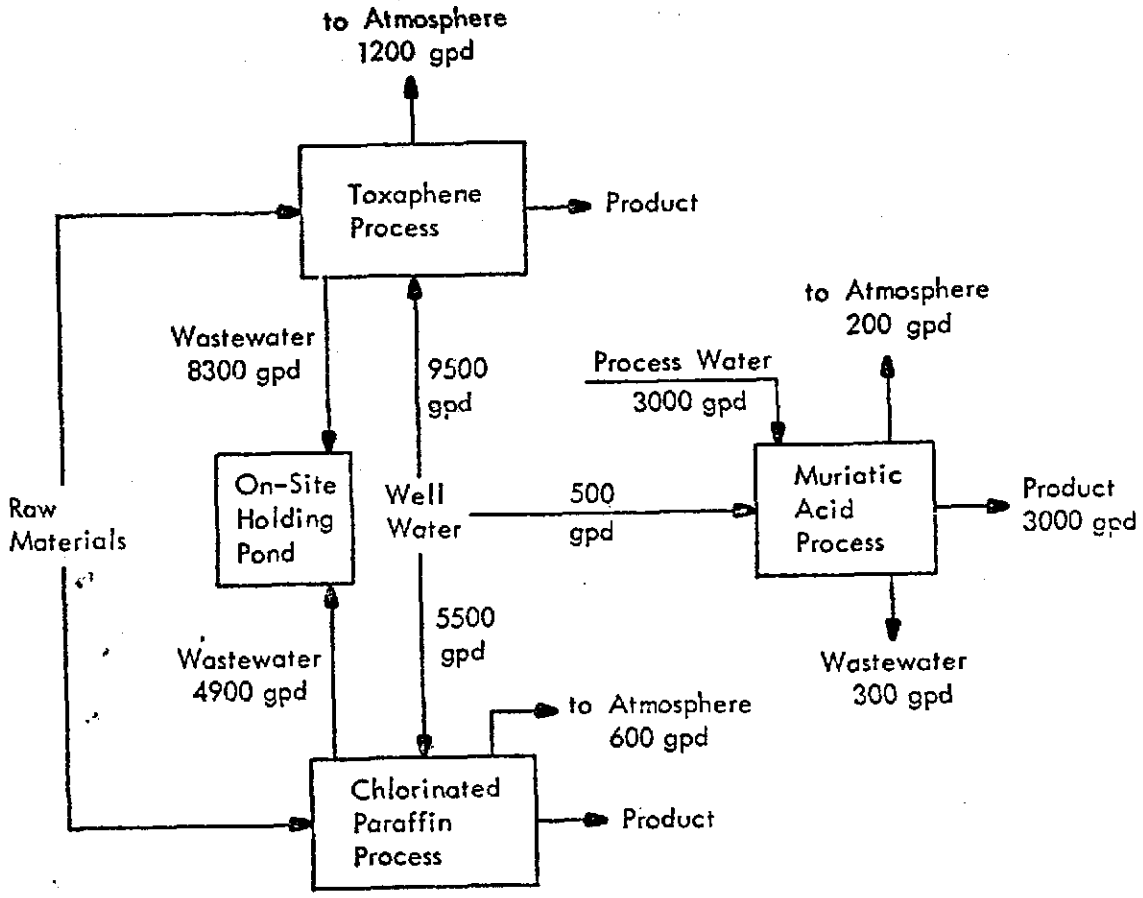

Adapted from information provided by Riverside Chemical Company
Source: NPDES Permit No. TX 0062448 (1975)

Figure 4. Schematic of water flow--Riverside Chemical Company, Port Neches, Texas

Analytical data concerning any contaminants in this by-product, hydrochloric acid, were not obtained by project investigators. However, a Riverside Chemical Company official has indicated that there is little, if any, toxaphene contained in this acid (Meiners and Mumma, 1975b).

In-Plant Controls

For in-plant toxaphene operations, pollution control is accomplished by dikes around all process equipment to contain all spills and leaks. A pit is provided for containment of massive spills. Also, a drainage system and collection sump for rainwater runoff has been provided; runoff collected in the sump is pumped to an unlined holding pond. Riverside has had the soil near this pond analyzed for porosity and had found that the soil is nearly impervious to transfer by seepage (Meiners and Mumma, 1975b).

The off-gases from production of by-product hydrochloric acid are neutralized in a gas scrubber before being vented to the atmosphere. At present, there is a small discharge flow (~ 12,000 gpd, see below) from the plant holding pond overflow, cooling tower blowdown, and boiler blowdown to the Jefferson County canal which adjoins the property. In addition, the neutralized caustic solution used to adsorb fugitive hydrogen chloride and chlorine gases from the scrubber goes into the Jefferson County Canal.

Wastewater Treatment

At present, no wastewater treatment method is used by Riverside Chemical Company at their Port Neches, Texas, plant. All wastewater from the diked chlorinating area is collected in a common holding pond (about

75 ft x 150 ft x 10 ft deep) located on-site (see Figure 4). Riverside is meeting the NPDES discharge limitation of 0.04 lb/day of toxaphene (daily average). The average daily volume of wastewater from three processes operated on-site is 12,000 gpd.

A Riverside official has stated that, theoretically, "no discharge" could be achieved. However, in ordinary plant operations, some water discharge will inevitably be required. The "no discharge" achievement would mean that all leaks can be controlled; all by-product hydrochloric acid is sold and the fugitive hydrogen chloride and chlorine gases from the scrubber converted into bleach (Meiners and Mumma, 1975b).

Plant Visit

On August 7, 1975, Dr. A. F. Meiners and Mr. C. E. Mumma visited the toxaphene plant of the Riverside Chemical Company at Port Neches, Texas. Toxaphene production was discussed with Mr. Robert C. Harnden, Senior Vice-President of Riverside Chemical Company. The manufacturing process and waste treatment facilities were examined during this visit.

VICKSBURG CHEMICAL COMPANY

General

The Vicksburg Chemical Company plant at Vicksburg, Mississippi, manufactures organic and inorganic chemicals including toxaphene, potassium nitrate, ammonium nitrate, dinitrobutylphenol (DNBP), methyl parathion, substituted triazines, nitric acid, and chlorine.

The toxaphene production unit is about 2 years old; the process equipment in this unit is used only for toxaphene manufacture. No toxaphene formulation operations are conducted at this plant. Production of this pesticide product (Vicksaphene®) is carried out on a seasonal basis according to market demand (Meiners and Mumma, 1975c).

Manufacturing Process

A batch type production process is used as shown in Figure 5. Purchased camphene is reacted with chlorine gas; the chlorination is conducted using four reactors connected in series. Chlorine is introduced into these reactors from a vaporizer. The exothermic heat of reaction is removed by noncontact heat exchangers. No solvents are used in the process, but the toxaphene is diluted with 10% xylene and sold as a 90% product.

Effluent hydrogen chloride gas is passed through a falling film absorber, and recovered by-product hydrochloric acid is removed from the bottom of the absorber and sent to storage. All of the by-product acid produced in this process is sold. Data obtained from the State of Mississippi (NPDES Application No. MS0027995, 1975) shows that the daily production of acid amounts to 48,000 lb/day during operating periods.

Off-gases leaving the acid absorber are contacted in a gas scrubber with caustic soda solution to neutralize any unabsorbed HCl or chlorine. The scrubbed gas is then vented to the atmosphere. Neutralized HCl waste (containing water and sodium chloride) is discharged at a flow rate of about 10 gpm to a settling pond.

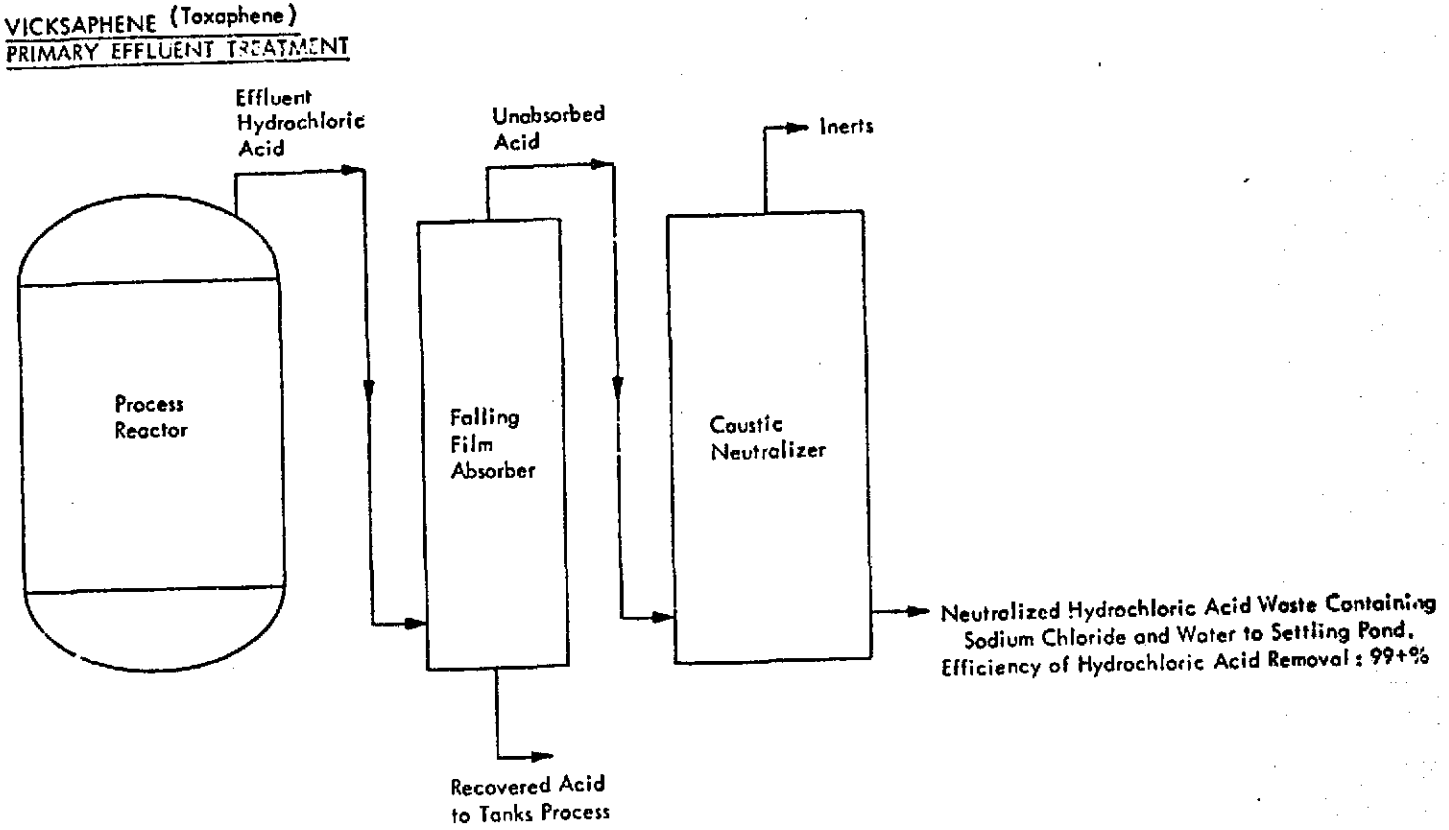

Source: Vicksburg Chemical Company, Fact Sheet, Application for National Pollutant Discharge Elimination System Permit to Discharge Wastewater to Waters of the State of Mississippi, February 25, 1975.

Figure 5. Toxaphene production schematic--Vicksburg Chemical Company, Vicksburg, Mississippi

During the seasonal operating periods, the process is operated 24 hr/day.

Wastewater Characteristics

The only liquid waste produced in the toxaphene process at the Vicksburg, Mississippi, plant is the neutralized HCl waste discharged at a rate of about 10 gpm from the caustic scrubber (Meiners and Mumma, 1975c). Chemical analyses performed by independent testing laboratories on samples of this effluent have not detected any toxaphene. (The analytical methods used were not stated.)

An engineering report was recently prepared for the Vicksburg Chemical Company by Enviro-Labs, Inc. (Enviro-Labs, 1975) as part of the requirement for the NPDES permit. The information concerning toxaphene in this report is quoted below.

"Toxaphene produces no liquid wastewater; however, there is a scrubber of high pH content to remove any chlorine that may escape from the reactor. The flow rate from the scrubber is approximately 10 gpm."

In-Plant Controls

The use of a noncontact cooling procedure for the chlorination reaction serves to reduce greatly the quantity of wastewater.

The entire toxaphene production facility is built on a concrete pad and is diked to contain any spills, leaks and rainwater runoff in the production area.

Wastewater Treatment

The only effluent from the toxaphene process is spent caustic solution discharged from the off-gas scrubber at a rate of approximately 10 gpm (Enviro-Labs, 1975). A Vicksburg Chemical Company official has stated that independent analysis of this effluent has failed to detect the presence of toxaphene (Meiners and Mumma, 1975c). This effluent is discharged to a final neutralization and settling pond located on-site as shown in Figure 6. Waste liquor is pumped from this pond to the city treatment plant (Figure 7).

A Vicksburg Chemical Company official has pointed out that zero discharge of effluent is not considered to be feasible, since it is probably impossible to avoid the small discharge (10 gpm) of effluent from the off-gas caustic scrubber (Meiners and Mumma, 1975c).

Plant Visit

On October 14, 1975, A. F. Meiners and C. E. Mumma visited the production plant of the Vicksburg Chemical Company in Vicksburg, Mississippi. Toxaphene production was discussed with Mr. Silvan B. Lutkewitte, President, and Mr. Jerry W. McAdams, Environmental Engineer. The manufacturing process and waste treatment facilities were examined during this visit.

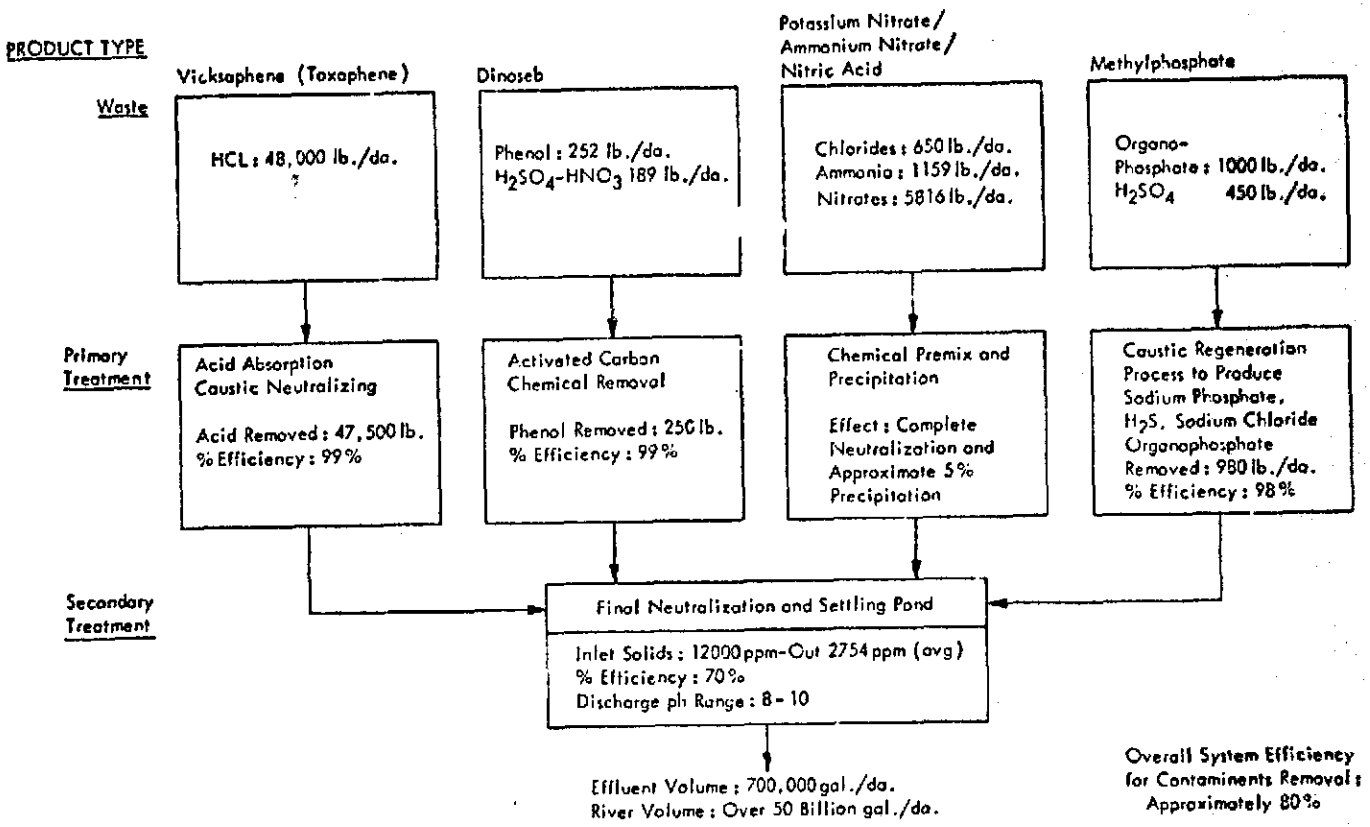

Source: Vicksburg Chemical Company, Fact Sheet, Application for National Pollutant Discharge Elimination System Permit to Discharge Wastewater to Waters of the State of Mississippi, February 25, 1975

Figure 6. Effluent treatment process--Vicksburg Chemical Company, Vicksburg, Mississippi

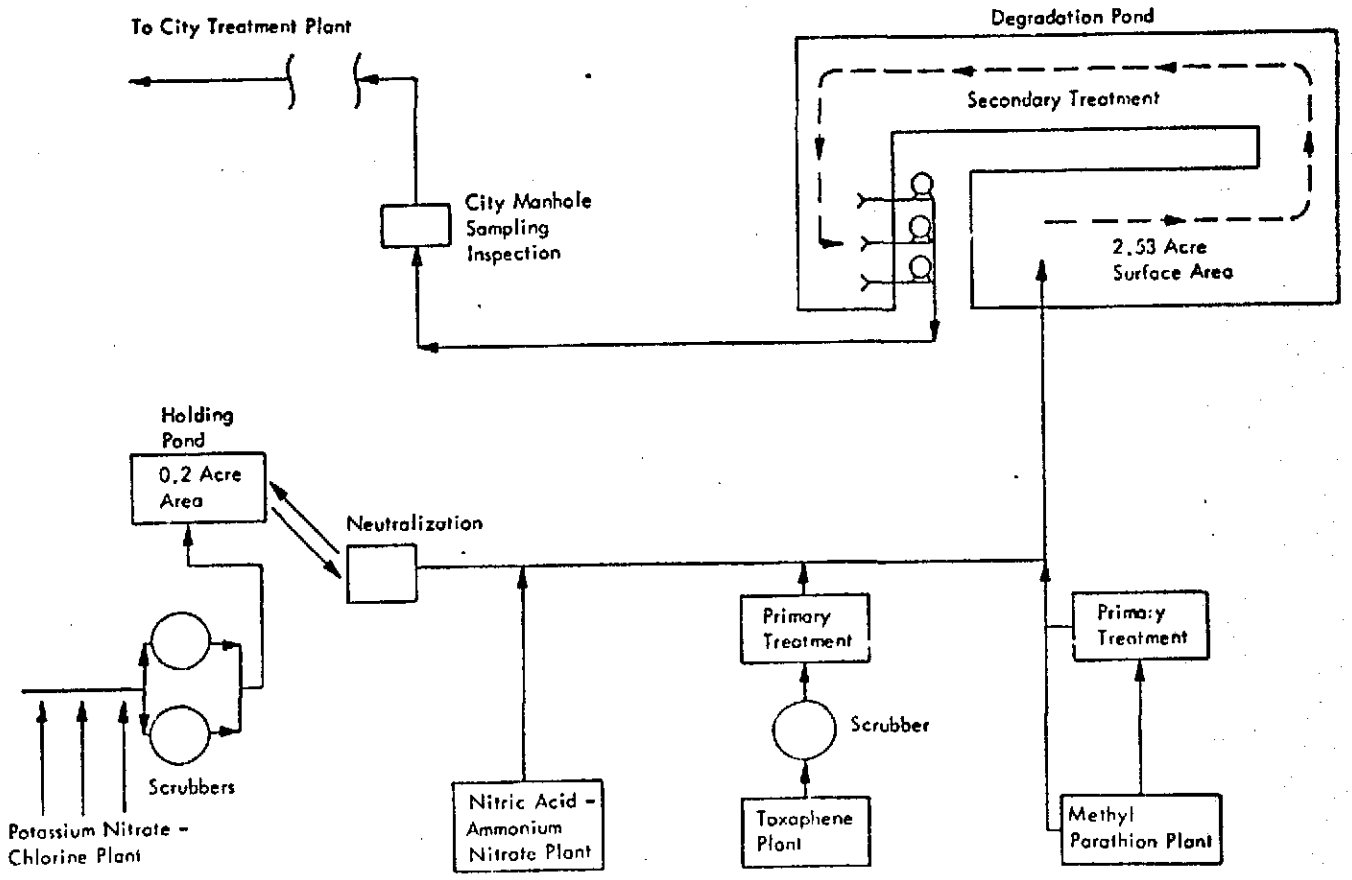

Source: Vicksburg Chemical Company, Fact Sheet, Application for National Pollutant Discharge Elimination System Permit to Discharge Wastewater to Waters of the State of Mississippi, February 25, 1975

Figure 7. Liquid waste disposal system--Vicksburg Chemical Company, Vicksburg, Mississippi

SECTION III

ALTERNATE SYSTEMS FOR REMOVING TOXAPHENE FROM WASTEWATER

A number of wastewater treatment methods have been investigated for the removal of toxaphene from wastewater. The methods which have received the most attention in past and current research, and which appear to be the most promising are (a) adsorption on synthetic resins, (b) reductive degradation, and (c) carbon adsorption. None of these systems have been operated under conditions which approximate actual use for toxaphene removal, nor have they been developed to a point where an accurate determination of operating conditions or costs can be made with confidence. In this section of the report, each of these systems is described, the probable effluent quality which can be achieved by each system is estimated, and the cost of each system is estimated based on its application to the toxaphene wastewater generated at the Hercules plant.

PRESENT STATUS OF ALTERNATE SYSTEMS FOR TREATING TOXAPHENE WASTEWATERS

Presented below are brief discussions of the present status of alternate systems for the treatment of toxaphene wastewater.

Adsorption on Synthetic Resin

The Rohm and Haas Company has developed a synthetic, polymeric adsorbent which shows excellent promise for the removal of pesticides from wastewater. According to this process, pesticides are adsorbed on Amberlite XAD-4, a synthetic, polymeric adsorbent processing high porosity (0.50 to 0.55 ml of pore per milliliter of bead), high surface area (850 m^2/g) and an inert, hydrophobic surface (Kennedy, 1973). The adsorbent is regenerated with an organic solvent, and the adsorbed pesticides are recovered in a concentrated form.

The process appears to have important advantages over carbon adsorptions. For example, the XAD-4 resin has been shown to be superior to activated carbon both in terms of pesticide leakage and in overall operating capacity (Kennedy, 1973).

Although the laboratory data look promising, many problems must be worked out before a practical process can be operational. To the best of our knowledge as of November 18, 1975, pilot-scale tests of the efficiency of treating toxaphene wastewater by this process have not been performed.

Reductive Degradation

Promising laboratory results have been shown by a degradation process involving the catalyzed reduction of chlorinated pesticides to relatively nontoxic products which do not contain chlorine. The process consists of a copper-catalyzed reduction of the pesticide in water by iron. The pesticide containing wastewater is passed through a packed column with the reductant suitably diluted with inert particles to obtain good flow properties.

Sweeny and Fischer (1970) and Sweeny et al. (1973) have reported that this process appears to be attractive for the destruction of a wide range of chlorinated hydrocarbon pesticides, including the cyclodiene pesticides: aldrin, dieldrin, chlordane, endrin and heptachlor. In laboratory studies, the process was found to proceed smoothly at ambient temperatures to remove all or a substantial amount of the chlorine from dissolved pesticides.

Applicability of the technique to toxaphene waste has been reviewed (Ferguson and Meiners, 1974). In one test, toxaphene waste was passed through a column at neutral pH. There was no deviation from the gas chromatograph baseline indicative of any of the seven principal peaks of toxaphene in the effluent (< 0.1 ppb); the solutions before treatment ranged as high as 5.5 mg/liter toxaphene (probably indicating the presence of some suspended toxaphene).

Activated Carbon

Limited laboratory data are available concerning the adsorption of toxaphene on activated carbon.

Hager and Rizzo (1974) have prepared limited isotherm data for the adsorption of toxaphene on carbon. The adsorption isotherm is the relationship, at a given temperature and other conditions, between the amount of a substance adsorbed and its concentration in the surrounding solution. A reading taken at any point on an isotherm gives the amount of material

adsorbed per unit weight of carbon. In very dilute solutions, such as wastewater, a logarithmic isotherm plotting usually yields a straight line.

From adsorption isotherm data, a determination can be made of whether or not a particular degree of organic removal can be effected by adsorption alone. Isotherm data will also show the approximate adsorptive capacity of the carbon for the application. Isotherm data represent a large amount of information condensed into concise form for ready evaluation and interpretation.

The data of Hager and Rizzo (1974) were obtained using granular carbon and toxaphene in distilled water. These studies were performed at toxaphene concentrations between about 11 and 175 ppm.

THE FEASIBILITY OF ALTERNATE SYSTEMS FOR REMOVING TOXAPHENE FROM WASTEWATER

Considerable information is available concerning the treatment of endrin wastewaters by means of reductive degradation and by adsorption on carbon and on Amberlite resin. However, very little information is available concerning the application of these processes to toxaphene. A careful consideration of (a) the available experimental data, (b) the similar chemical and physical properties of the two products, and (c) an evaluation of the opinions of researchers knowledgeable of the processes, leads to the conclusion that these processes should have practical application to toxaphene as well as endrin. These topics are discussed below.

A Comparison of the Chemical and Physical Properties of Endrin and Toxaphene

An examination of the chemical and physical properties of endrin and toxaphene (Table 4) reveals that they are similar in regard to properties that are important to the phenomenon of adsorption, such as affinity for water, polarity, and solubility. The chemical natures of the two pesticides are also similar; both are highly-chlorinated products containing over 56% chlorine by weight. It could be predicted that these products would behave similarly in many chemical reactions, such as oxidation or reduction, and in fact both products have been shown to be resistant to oxidation and susceptible to the reductive degradation reaction.

The resistance of endrin to oxidation is indicated by the experiments of Robeck et al. (1965) which show that highly chlorinated hydrocarbons such as endrin, lindane, and dieldrin, are not further oxidized by chlorine. Robeck et al. (1965) state that "It was not anticipated that chlorination would have much effect on the chlorinated hydrocarbons." Further experimental work is cited by Marks (1974a) which shows that the chemical oxidation of endrin in water by the oxidant potassium permanganate is "ineffective."

The resistance of toxaphene to oxidation is exemplified by the work of Cohen et al. (1960), which showed, that, as expected, toxaphene in water was not affected by chlorine.

The susceptibility of both endrin and toxaphene to reductive degradation is discussed below.

Table 4. CHEMICAL AND PHYSICAL PROPERTIES OF ENDRIN AND TOXAPHENE[a/]

	Endrin	Toxaphene
Chemical Class	Chlorinated hydrocarbon	Chlorinated hydrocarbon
Description	Crystalline solid	Waxy solid
Empirical formula	$C_{12}H_8Cl_6O$	~ $C_{10}H_{10}Cl_8$[b/]
Molecular weight	381	~ 415[b/]
Chlorine content	56%	67-69%
Carbon content	38%	28-31%
Hydrogen content	2%	~ 2.5%
Melting point	> 200°C (with decomposition)	~ 84°C
Affinity for water	Hydrophobic	Hydrophobic
Polarity	Nonpolar	Nonpolar
Flammability	Nonflammable	Nonflammable
Solubility		
Water	Very slightly soluble (0.23 ppm at 25°C)[c/]	Very slightly soluble (0.4-3.0 ppm)[c/]
Petroleum oils	Slightly soluble	Soluble
Acetone	Soluble	Soluble
Benzene	Soluble	Soluble

a/ The information presented in this table was obtained from multiple sources which are in general agreement.

b/ Toxaphene has the approximate composition $C_{10}H_{10}Cl_8$. It consists of a mixture of 20 to 30 major compounds resulting from the chlorination of camphene, but is predominantly a mixture of the octachlorocamphene isomers.

c/ Gunther, F. A., "Reported Solubilities of 738 Pesticide Chemicals in Water," Residue Reviews, 20:1-145 (1968).

Reductive Degradation

Considerable development work has been performed on the reductive degradation process applied to wastewaters containing endrin (Sweeny et al., December 1973; Sweeny, May 1974; Sweeny, September 1974). Relatively little work has been done concerning the application of this process to toxaphene. However, the Envirogenics Company has demonstrated in the laboratory that the reductive degradation system using copper-catalyzed iron can reduce the concentration of toxaphene to less than 3 ppb from a concentration of 1,000 ppb (Sweeny et al., December 1973). Also, Sweeny in a patent owned by the U.S. government (Sweeny, June 1973) describes a series of tests using the process for the reduction of toxaphene, chlordane, dieldrin, aldrin, heptachlor, and polychlorinated polyphenyls. Substantial conversion of these compounds (which are all highly-chlorinated organics) was confirmed by gas chromatography and by chloride ion determinations.

Dr. Robert Swank, Acting Chief, Industrial Pollution Branch, Environmental Protection Agency, Athens, Georgia, is project monitor for the current project study (EPA Contract No. 68-01-0083) involving the reductive degradation of endrin and other highly-chlorinated hydrocarbons. Dr. Swank is convinced that the reductive degradation system would be practical for toxaphene as well as for other chlorinated pesticides (Swank, 1975).

Dr. K. H. Sweeny is program manager for a current study of the application of the reductive degradation system for the removal of chlorinated hydrocarbon pesticides from wastewater (EPA Contract No. 68-01-0083,

Envirogenics Systems Company). Dr. Sweeny believes that the reductive degradation process is very promising for the removal of toxaphene from wastewater (Sweeny, 1975).

Adsorption of Toxaphene on Carbon and on Amberlite Resin

In the candidate systems for resin adsorption and carbon adsorption dilute aqueous solutions of endrin and toxaphene, 300 and 500 ppb, respectively, are contacted with the adsorbent. The phenomenon responsible for the removal of the contaminant from water involves physical adsorption of the contaminant on the surface of the adsorbent. There is strong evidence that carbon will effectively adsorb both of these products. Figure 8 presents the data obtained by the Calgon Corporation (Hager and Rizzo, 1974). This figure shows that carbon is effective in removing both contaminants from water at concentrations of about 20 ppb; the weight pickups are approximately 2% for toxaphene, 3% for endrin. The concentration of endrin can be reduced to about 0.2 ppb. A linear extrapolation of the toxaphene isotherm indicates that the weight percent pickup by carbon would be even greater for toxaphene than for endrin at concentrations below about 5 ppb. The extrapolation of the toxaphene isotherm to lower concentrations is reasonable because, according to the Process Design Manual for Carbon Adsorption published by EPA (Cornell, 1973), "In very dilute solutions, such as wastewater, a logarithmic isotherm plotting usually yields a straight line."

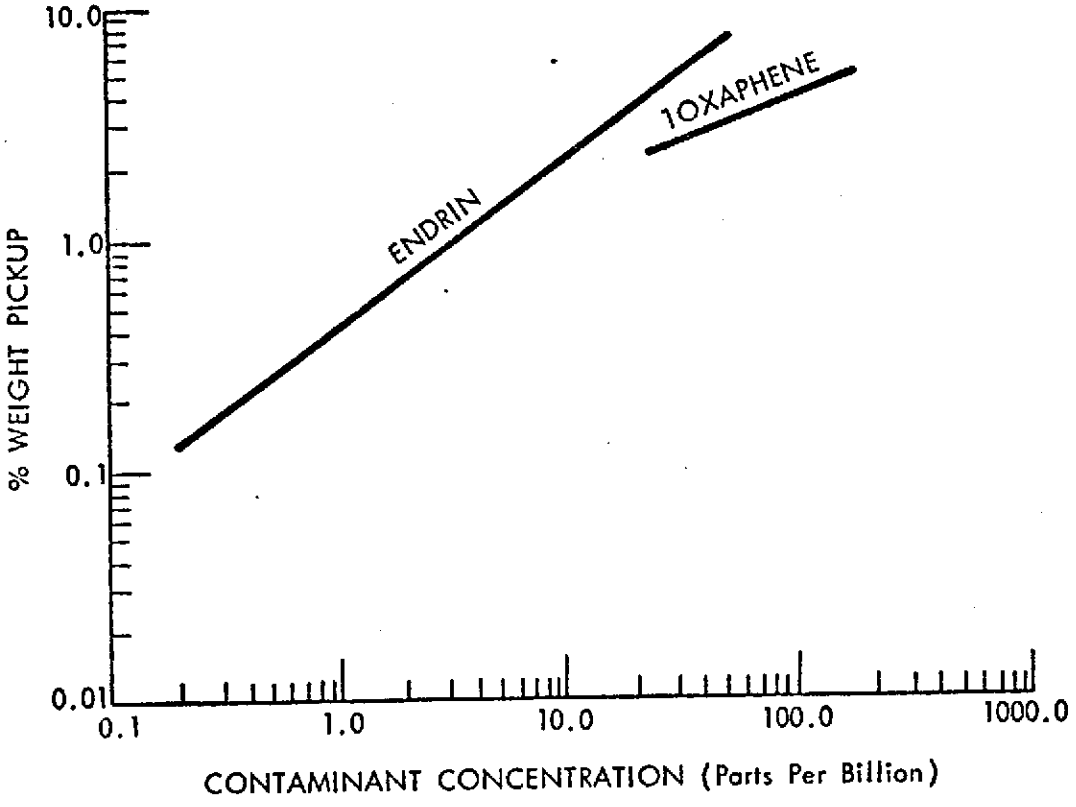

Source: Hager and Rizzo (1974).

Figure 8. Simplified adsorption summary - toxaphene

For several years the Rohm and Haas Company has been investigating the adsorptive properties of its proprietary resin, Amberlite XAD-4, for the removal of contaminants from water. The properties of the resin have been described by Rohm and Haas (Rohm and Haas, 1971). The resin has been shown to be very effective compared to carbon for the removal of "chlorinated pesticides from actual manufacturing waste effluents" (Kennedy, 1973).

In our recent contacts with Rohm and Haas Company, personnel restated the usefulness of the resin for wastewater treatment. Rohm and Haas states that it has evaluated this resin compared to carbon, and that in all tests to date the resin has been superior to carbon in reducing the contaminant concentration (Huritz, 1975). Although Rohm and Haas has not tested its resin on endrin or toxaphene, it has performed confidential studies for various industrial clients; for one "chlorinated pesticide," the wastewater concentration was reduced from 300 to 500 ppb to 1 to 3 ppb (Borenstein, 1975).

Thus, the available evidence indicates that the Amberlite XAD-4 resin would be feasible for use in a practical system for the removal of toxaphene from water.

FLOW DIAGRAMS OF ALTERNATE SYSTEMS FOR REMOVING TOXAPHENE FROM WASTEWATER

Although the alternate treatment systems have been operated on only a laboratory scale, not on a pilot scale, it is possible for the purpose of cost estimation to prepare flow diagrams showing the approximate design of the systems. Also, as pointed out earlier in this section of the report,

the alternate systems would be expected to be approximately as effective in treating toxaphene wastewater as they are in treating endrin wastewater. On this basis, an estimate of effluent quality can be made. Discussed below are (a) flow diagrams of alternate systems for the treatment of toxaphene wastewater and (b) the expected quality of the effluent produced when the alternate systems are used to treat the toxaphene wastewater. The systems are applied to wastes generated at the Hercules, Inc., plant at Brunswick, Georgia, since the other manufacturers produce substantially smaller waste streams.

The Amberlite XAD-4 Resin and Reductive Degradation Systems

The Amberlite XAD-4 resin system and reductive degradation system are being studied for treatment of chlorinated pesticide wastes by Velsicol Chemical Corporation and Envirogenics Systems Company, respectively. Envirogenics has tested the capability of the reductive degradation system to remove toxaphene from wastewater. No information is available on treatment of toxaphene wastes with the resin system. A general description of these systems was presented earlier in this section.

Design flow diagrams of these alternate treatment systems are presented in Figures 9 through 12. In each system, the plant process wastewater containing toxaphene is passed through a sedimentation process and a filtration process (a) to remove the suspended solids that would otherwise pass through the XAD-4 resin system or overburden the reductive degradation system, and (b) to allow destruction of the free chlorine by sunlight (requiring 8 hr of exposure). The figures show the quality of the treated effluent discharged and the sludge disposal operations.

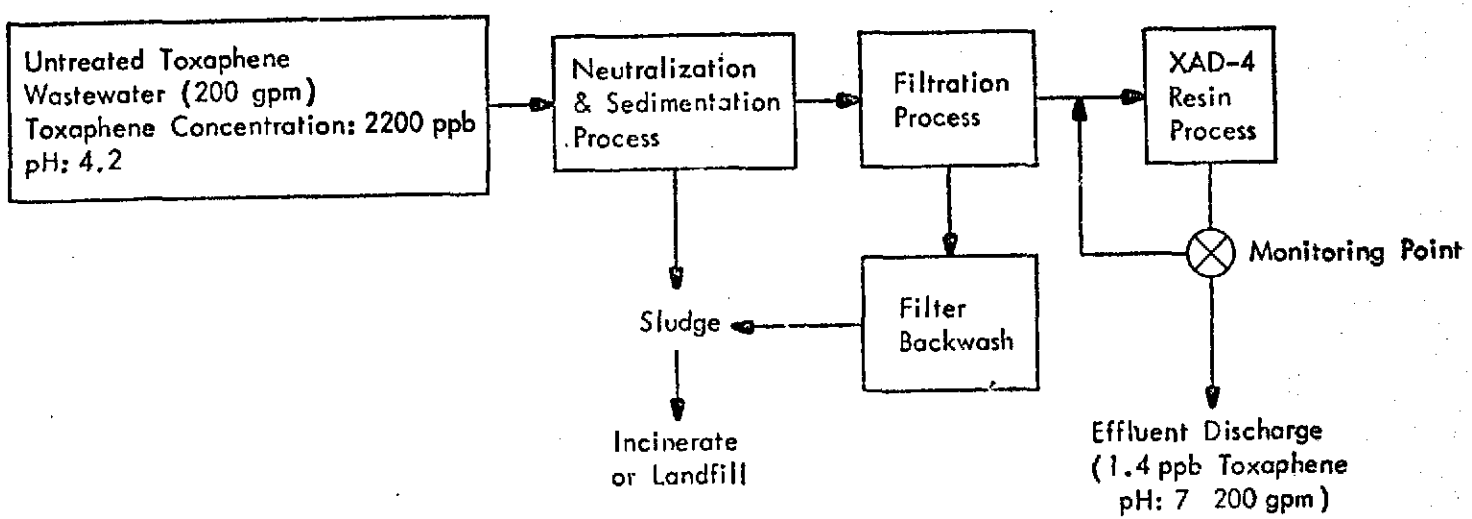

Figure 9. Design flow diagram of Amberlite XAD-4 resin system

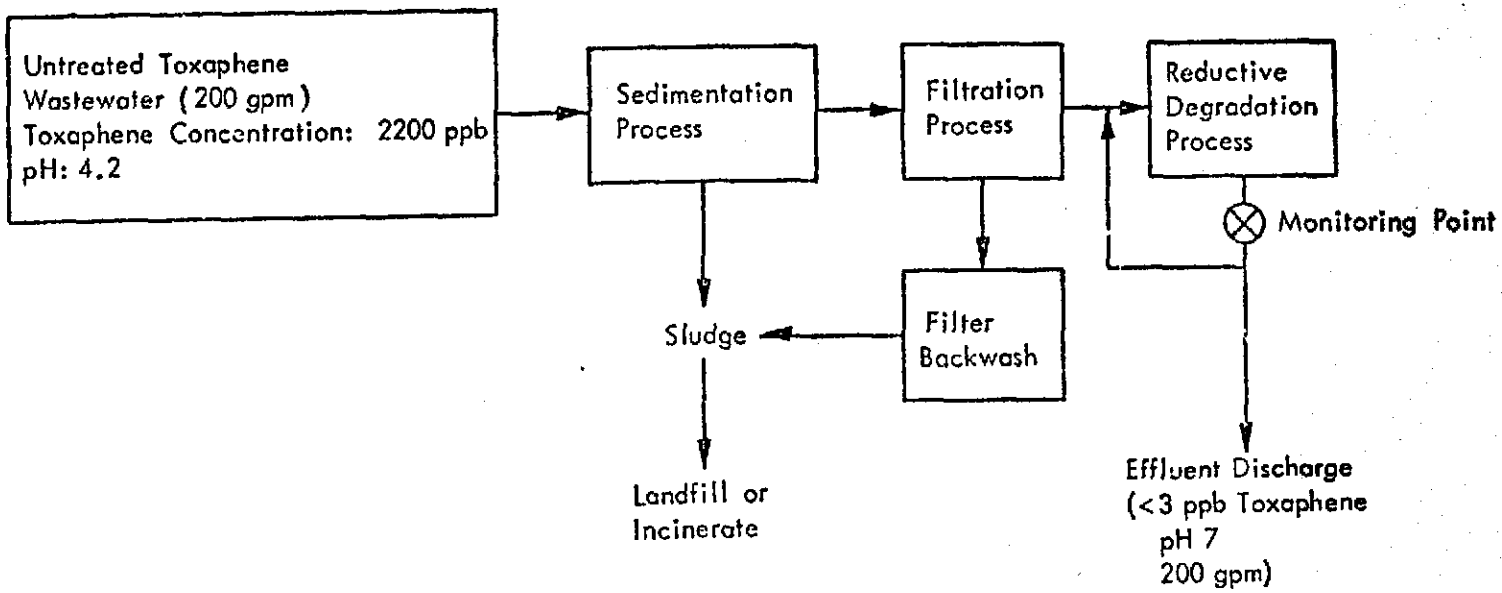

Figure 10. Design flow diagram of reductive degradation system

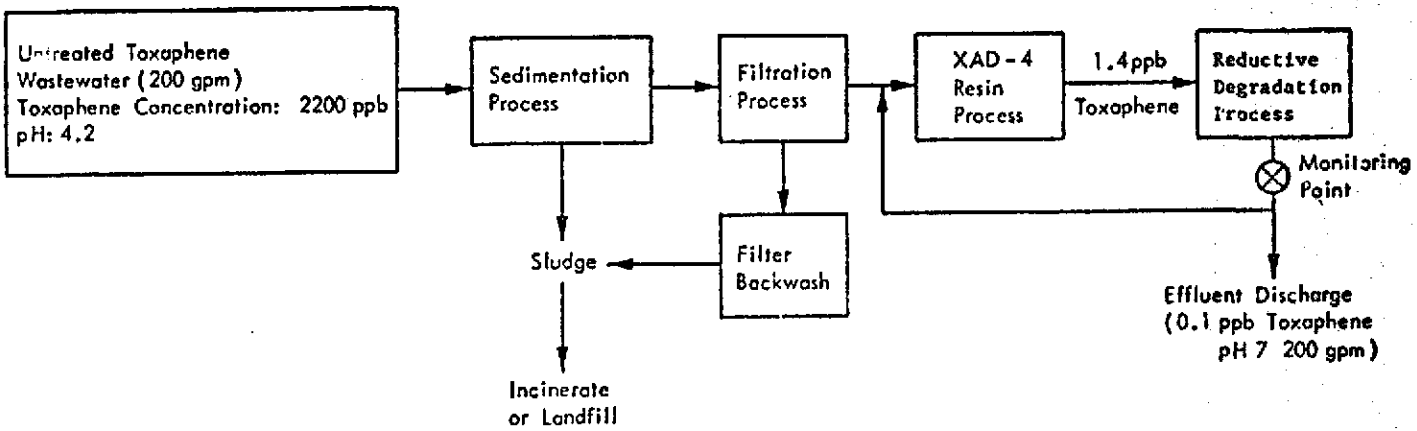

Figure 11. Design flow diagram of Amberlite XAD-4 resin system and reductive degradation system in series

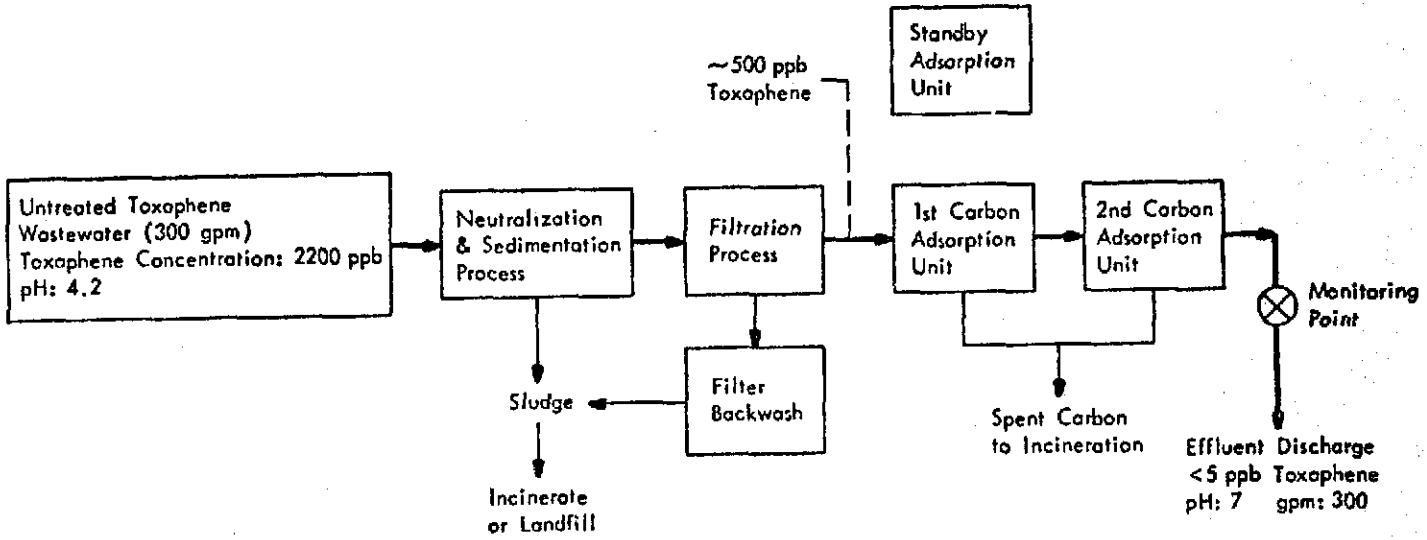

Figure 12. Design flow diagram for a carbon adsorption system

Figure 9 shows the design flow diagram of Amberlite XAD-4 resin adsorbent system. In the XAD-4 system, the wastewater is passed through vertical columns packed with resin that adsorbs the toxaphene. The resin is periodically regenerated by flushing the resin beds with isopropyl alcohol to remove accumulated toxaphene. The treated wastewater passes through a monitoring point and is then discharged.

Figure 10 shows the design flow diagram of the reductive degradation system. The reductive degradation process operates by first neutralizing (to pH 7) the acid wastewater with sodium carbonate in a pH adjustment tank. After neutralization, the wastewater passes through parallel reductant columns that are packed with copper-catalyzed iron and sand. The toxaphene is destroyed by reductive degradation in the columns. Subsequently, the treated wastewater is monitored and discharged.

Figure 11 shows the two systems in series. The wastewater is processed through the XAD-4 resin system, the reductive degradation system, and then discharged.

The process equipment involved in each system is given in greater detail in the cost estimates discussed subsequently.

The Quality of the Treated Effluent

The quality of the toxaphene wastewater after treatment by the reductive degradation system has been determined in laboratory studies conducted by Envirogenics. However, the tests conducted by Velsicol (Marks, March 1974) using the XAD-4 resin system involved only endrin wastewater. The

transfer of endrin treatment technology to treatment of toxaphene wastewater appears to be feasible as discussed earlier in this report. Based upon the information to date, the probable quality of the treated effluent from each of the three systems is as follows.

Amberlite XAD-4 Resin System - Velsicol has demonstrated in the laboratory that the XAD-4 resin adsorbent system can reduce the concentration of endrin in wastewater down to an average of 1.36 ppb (Marks, March 1974). For reasons described earlier in this report, we believe that the resin system would be approximately as effective for toxaphene as it is for endrin.

The Reductive Degradation System - Envirogenics Systems Company has demonstrated in the laboratory that the reductive degradation system using copper-catalyzed iron can reduce the concentration of toxaphene down to less than 3 ppb from a concentration of 1,000 ppb (Sweeny et al., July 1973).

Amberlite XAD-4 Resin System and Reductive Degradation System in Series - This system treats the toxaphene wastewater with the XAD-4 resin system first, and reduces the toxaphene concentration down to about 1.4 ppb prior to treatment by the reductive degradation system. The reductive degradation system has not been tested for treating this low concentration of toxaphene, but it is reasonable to assume a ten-fold decrease in toxaphene levels in this case (since the higher concentration of 1,000 ppb was reduced over 300-fold). Therefore, the amount of toxaphene in the effluent of these two systems acting in series is estimated to be about 0.1 ppb.

Carbon Adsorption System

A conceptual flow diagram for a carbon adsorption process (Hutchins, 1975a) is shown in Figure 12. The portions of this process which deal with removal of suspended solids and pH adjustment in the wastewater are taken to be identical to the process steps of sedimentation, filtration and neutralization, which are used in the reductive degradation system.

After removal of suspended solids from the wastewater, it is conducted through a two-stage carbon adsorption system consisting essentially of (a) two on-stream carbon adsorption units operating in series and one standby adsorption unit packed with granular activated carbon, and (b) the required auxiliary equipment (pump, piping, process instrumentation, etc.).

When the concentration of toxaphene in the effluent from the first unit is equivalent to the feed concentration, the carbon in the unit is exhausted and the unit is taken off stream (Hutchins, 1975a). The second unit then becomes the lead unit and the standby column is put on stream as the second column in the series. The exhausted unit is discharged, refilled with fresh carbon, and used as standby. Because of the small requirement for activated carbon, regeneration of the carbon is not economically justified (Hutchins, 1975b). The exhausted carbon is disposed of by incineration; the costs for incineration are not included in this study.

Robeck (1965) has reported test data (Table 5) for carbon adsorption of endrin from wastewater; the influent contained 10 ppb endrin and the endrin removal was over 99%. Similar results were reported for wastewaters containing other chlorinated hydrocarbon pesticides. In this study, it was considered that a similar adsorption efficiency would apply for toxaphene wastewater; on this basis the estimated endrin content in the treated effluent would be less than 5 ppb.

Table 5. SUMMARY OF CUMULATIVE PESTICIDE REMOVAL AT 10-PPB LOAD

Process	Pesticide removed (%)					
	DDT	Lindane	Parathion	Dieldrin	2,4,5-T Ester	Endrin
Chlorination (5 ppm)	< 10	< 10	75	< 10	< 10	< 10
Coagulation and Filtration	98	< 10	80	55	65	35
Carbon: Slurry						
5 ppm		30	> 99	75	80	80
10 ppm		55	> 99	85	90	90
20 ppm		80	> 99	92	95	94
Carbon: Bed						
0.5 gpm/cu ft	> 99	> 99	> 99	> 99	> 99	> 99

Source: Robeck, 1965 (p. 198).

POSSIBILITIES FOR ZERO DISCHARGE IN TOXAPHENE MANUFACTURE

There is no apparent potential for zero discharge of effluent for the Hercules, Inc., toxaphene wastewater treatment process currently used at the Brunswick, Georgia, plant. Major equipment changes and modifications in the existing treatment facility would be required to even approach a

condition of zero discharge at this site. The presently used treatment process does not appear to be amenable to operation with zero discharge. At present the discharge of wastewater is estimated to be about 3.5 gal/lb of toxaphene product.

According to data obtained during site visits to Tenneco, Inc., at Fords, New Jersey, to Vicksburg Chemical Company, Vicksburg, Mississippi, and to Riverside Chemical, at Groves, Texas, the other three domestic toxaphene plants are in a much more favorable position than Hercules for either closely approaching or achieving a no discharge type of operation. (See references: Meiners and Mumma, 1975a; Meiners and Mumma, 1975b; and Meiners and Mumma, 1975c.) According to data furnished by the producing companies, the Tenneco, Inc., plant and the Vicksburg Chemical Company plant presently have no discharge of process wastewater; both of these plants do have a discharge of caustic waste liquid from off-gas scrubbing operations, i.e., about 100 gpd spent caustic liquid for Tenneco and 14,400 gpd of spent caustic at Vicksburg plant. The Riverside plant currently discharges about 12,000 gpd of toxaphene contaminated wastewaters containing an average of about 0.04 lb of toxaphene (i.e., an average concentration of about 0.4 ppm toxaphene in discharge wastewater).

A plant official at the Riverside Chemical Company has stated (Meiners, August 1975) that "for practical purposes no discharge can be achieved by toxaphene plants." However, this official believes that in ordinary plant operations some water discharge will inevitably be required and that the

no discharge achievement would mean that practically all of the by-product hydrochloric acid from the toxaphene process would be sold as product.

COMPARISON OF EFFLUENTS PRODUCED BY ALTERNATE TREATMENT SYSTEMS WITH EFFLUENT LIMITATIONS GUIDELINES

The Environmental Protection Agency in their "general instructions" to contractors (Part II) describes effluent limitations guidelines in terms of Levels I, II, and III technology. These levels of technology are briefly defined below and replace the terms "best practicable control technology currently available" (BPCTCA), "best available technology economically achievable" (BATEA) and "best available demonstrated control technology" (BADCT).

Level I - Control and Treatment Technology

This level must be achieved by all plants in each industry not later than July 1, 1977. "Level I technology should be based upon the average of the best existing performance by plants of various sizes, ages and unit processes within each industrial category or subcategory. This average shall not be based upon a broad range of plants within an industrial category or subcategory, but shall be based upon performance levels achieved by exemplary plants."

Level II - Control and Treatment Technology

This level is to be achieved not later than July 1, 1983. "Level II technology is not based upon an average of the best performance within an industrial category, but is to be determined by identifying the very best

control and treatment technology employed by a specific point source within the industrial category or subcategory, or where it is readily transferable from one industry process to another, such technology may be identified as Level II technology."

Level III - Control and Treatment Technology

This level is to be achieved by new sources. "Level III technology shall be evaluated by adding to the considera[illegible]a underlying the identification of Level II technology a determination of what higher levels of pollution control are available through the use of improved production processes and/or treatment techniques."

The effluent limitations tentatively recommended for the "Halogenated Organic Pesticides" subcategory of the "Pesticides and Agricultural Chemicals Industry" category are presented in Table 6.

Except for one plant, the Hercules plant (Brunswick, Georgia), the effluent limitations guidelines cannot be compared with the quality of effluents from toxaphene production units. In general, no data concerning BOD, suspended solids, or phenol concentration are available for the effluent from the toxaphene processes. Although data of this kind are reported for the total plant effluent, the total effluent consists of discharges from a number of other processes.

SECTION IV

WASTEWATER TREATMENT COST ESTIMATES

In this portion of the report, capital investment costs and annual operating costs are estimated (a) for presently used toxaphene wastewater treatment systems and (b) for alternate wastewater treatment systems.

ESTIMATED COST OF PRESENTLY USED WASTEWATER TREATMENT SYSTEMS

Presented below are estimates of the capital investment costs and operating costs for wastewater treatment systems currently in operation at the four toxaphene production plants in the United States.

The Hercules Plant (Brunswick, Georgia)

A description of the wastewater treatment system used at the Hercules plant has been presented in Section III. Lair and Bruner (1975) have reported that the treatment facilities were built by Hercules during the period 1971 to 1974. The design flow capacity of this treatment system is reported to be 300 gpm, and the design toxaphene content in treated effluent is 1 lb/day (Hicks, 1975).

The capital cost of the toxaphene wastewater treatment system is reported by Hicks (1975) to be about $800,000. The annual operating cost of the treatment facility in 1974 was reported to be about $300,000, including

Preceding page blank

monitoring costs and technical services (Hicks, 1975). These costs do not include a solid waste disposal procedure.

The Tenneco, Riverside, and Vicksburg Plants

None of these three plants operate a toxaphene wastewater treatment system. Therefore, no treatment cost data are available for these plants. A detailed description of the waste disposal systems used by these plants is presented in Section II.

ESTIMATED COST OF ALTERNATE TOXAPHENE WASTEWATER TREATMENT SYSTEMS

Investment and operating cost estimates have been prepared for four potential alternate systems. The costs have been estimated based upon the application of the treatment systems to the toxaphene wastewater generated at the Hercules plant (Brunswick, Georgia). Costs have been estimated for the following systems: (a) adsorption on synthetic resins, (b) reductive degradation, (c) adsorption on synthetic resins followed by reductive degradation, and (d) adsorption on granular activated carbon.

One alternative, in addition to those above, would be to reduce the wastewater flow rate and quantity. However, no information is available concerning the cost of achieving a reduced wastewater flow; therefore, no cost estimate is made for this alternative.

Cost estimates have been made for two flow rates, 200 gpm and 300 gpm. According to Hicks (1975), the present treatment system has a design flow capacity of 300 gpm and the average influent flow rate is about 200 gpm.

A discussion of the methodology and the results of the cost estimates is presented below.

Estimated Capital Investment Costs for the Resin Adsorption System and the Reductive Degradation System

Information concerning the alternate treatment systems and their associated costs is derived in part from information submitted by Velsicol Chemical Corporation (Marks, September 1974) and in part from reports by Envirogenics Systems Company (Sweeny, May 1974 and September 1974) concerning the pilot plant demonstration units. Where the costs of required process equipment or labor were not stated by the two above companies, these costs are estimated. In addition, the treatment systems are scaled up from the proposed demonstration units (100 gpm flow) to 200 and 300 gpm, and the costs are given in April 1975 dollars.

Since all of the alternate systems require both a sedimentation and filtration process, and the costs of these two processes are identical for each system, these processes are examined first. Following the treatment and filtration processes, each of the alternate systems are discussed separately. The cost estimates for the system are then summarized and totaled.

Sedimentation Process Costs - The sedimentation process will allow large solid undissolved particles to settle out of the wastewater prior to filtration. The installed capital cost for a system to handle 200 gpm (288,000 gpd) and 300 gpm (432,000 gpd) is estimated from a report by Blecker and Nichols (1973). The graph on page 126 of their report shows that the installed cost (1972 dollars) of a sedimentation system to handle 1 million gallons per day is $65,000. The installed costs for the systems to handle 200 and 300 gpm flows are extrapolated from the graph and are

$20,000 and $25,000, respectively. These installed systems for the sedimentation process include the purchased cost of tanks, motors and drives, pumps, piping, concrete, structural steel, instrumentation, electrical, paint, and indirect costs.

Since these installed costs are given in 1972 dollars, the costs must be escalated to April 1975 prices. To do this, the Chemical Engineering (CE) Plant Cost Index is used. Chemical Engineering (1975a) reports that in 1972, this index was 137.2 but had risen to 180.6 by April 1975. Therefore, the estimated installed capital cost (rounded) of each sedimentation process system is:

$$\text{200 gpm process:} \quad (\$20{,}000)\left(\frac{180.6}{137.2}\right) = \$26{,}300$$

$$\text{300 gpm process:} \quad (\$25{,}000)\left(\frac{180.6}{137.2}\right) = \$32{,}900$$

Blecker and Nichols (1973) reported that the annual maintenance cost for each process is about 15% of the installed cost or $3,900 and $4,900, respectively. This report also states that the process requires no operator attention. However, operating labor is estimated at 3 hr/day for routine checks on the process to see that it functions properly.

Periodically, the sludge must be removed and landfilled or incinerated. The cost of sludge removal is included in the maintenance cost. The cost of land for landfill or the cost of incineration process is excluded in this estimate.

Blecker and Nichols (1973) report that the expected life of these systems is between 25 and 60 years, and the life is taken to be 40 years for the purpose of depreciation of the installed costs. (See Appendix B.)

Filtration Process Costs - The wastewater is pumped from the sedimentation process (at the same rate as the inflow) into a sand filter to further remove suspended solids. The flow rate through a sand filter can vary depending upon the design, but a typical flow rate according to Envirogenics Systems Company (1973) is about 3.2 gal/sq ft/min. Thus, the required filter area for the 200 and 300 gpm flows is about 70 and 100 sq ft, respectively. A back-up filter is required for each process since the plant operates 24 hr/day.

The installed cost for the filtration process is obtained from the report by Blecker and Nichols (1973). The graph on page 66 of this report shows that the installed cost of a 70 sq ft filter is $50,000 and a 100 sq ft filter is $60,000. Since these costs are in 1972 dollars, the April 1975 costs (rounded) are:

200 gpm filtration process: $(2)(\$50,000)\left(\frac{180.6}{137.2}\right) = \$131,600$

300 gpm filtration process: $(2)(\$60,000)\left(\frac{180.6}{137.2}\right) = \$158,000$

Blecker and Nichols (1973) reported that the annual maintenance cost for each process is about 5% of the installed cost or $6,600 and $7,900, respectively. This report states that the filtration process requires no operator attention. However, operating labor is estimated at 3 hr/day for routine checks on the process to see that it functions properly.

Periodically, the filters are backwashed into a sump to remove the filtered solids. Removal of the sludge from the pit is included in the maintenance costs given above. The cost of land for landfill or the cost of incineration of the sludge is excluded in this estimate.

Blecker and Nichols (1973) reported that the expected life of the filtration process is between 10 and 20 years and is taken to be 15 years for the purpose of depreciation of the installed costs (see Appendix B).

Resin Adsorption System Costs - Velsicol Chemical Corporation designed a system and estimated the costs for an Amberlite XAD-4 resin process to treat 100 gpm of wastewater. A system is described and the costs are estimated in their R&D grant application submitted to EPA to conduct a project entitled, "Chlorinated Hydrocarbon Pesticide Removal from Wastewater," In another document written by Marks (September 1974), the installed capital equipment costs (1973 dollars) were estimated by Velsicol to be $60,000 (excluding the filtration process) for purchased parts and $27,000 for installation of the process, or a total of $87,600. These costs were itemized by Velsicol as follows:

Purchased Parts		
2 Resin columns with headers	$16,000	
2 Solvent tanks	22,000	
3 Transfer pumps	6,000	
Instrumentation	4,000	
Valves and piping	4,800	
Contingency on purchased parts	7,200	
	$60,000	$60,000

Subcontracts		
Mechanical and electrical construction	$22,000	
Slab and related civil works	5,600	
	$27,600	27,600
Total cost		$87,600

Chemical Engineering (1975a) shows that the 1973 CE plant cost index was 144.1 so that the April 1975 estimated cost of the XAD-4 resin process is:

$$(\$87,600)\left(\frac{180.6}{144.1}\right) = \$110,000$$

This cost is for a 100 gpm flow rate and must be scaled up to 200 and 300 gpm, respectively. Since this process involves tanks, pumps, piping, and resin columns, the best available method to scale up this plant is the logarithmic relationship known as the "six-tenths factor" (see Appendix B). Using this method, the installed cost for the XAD-4 resin process is:

$$\text{200 gpm process: } (\$110,000)\left(\frac{200}{100}\right)^{0.6} = \$167,000$$

$$\text{300 gpm process: } (\$110,000)\left(\frac{300}{100}\right)^{0.6} = \$212,700$$

These costs do not include the cost of neutralizing the treated wastewater. Since the current practice at Hercules is to neutralize the toxaphene wastewater with limestone prior to treatment, the only cost added by the XAD-4 resin system would be the cost of the limestone since the neutralization process facility already exists.

The cost of the limestone is negligible in this treatment system compared to the cost of the resin and isopropyl alcohol (discussed subsequently) since the amount of limestone required to neutralize the wastewater is less than the amount of sodium carbonate required in the reductive degradation system (Cywin, 1973), which amounts to 44,100 lb/year for a 100 gpm plant. The cost of limestone is only about one-tenth the cost of sodium carbonate, or about $10/ton (Cywin, 1973). On an annual basis, this amounts to a cost of $220 to neutralize the wastewater of a 100 gpm plant. For the 200 gpm and 300 gpm plants the annual costs would be $440 and $660, respectively, which are negligible in this case.

The material costs are essentially the Amberlite XAD-4 resin and the isopropyl alcohol used to regenerate the contaminated resin columns. Velsicol (Vitalis, 1975) estimates that the cost of the resin to charge the resin columns for the 100 gpm system is $63,000 (current prices) and that the resin has an operating lifetime of 5 years. Rohm and Haas Company (Kennedy, 1973) estimates that the cost of the regeneration isopropyl alcohol makeup is $30,000 per year (1972 prices) for a 100 gpm process. The average 1972 price of isopropyl alcohol was about $0.45/gal (Oil, Paint and Drug, 1972) and the current price is $0.70/dal (Chemical Marketing Reporter, 1975), so that the isopropyl alcohol cost in April 1975 prices is (0.70/0.45) ($30,000) or $46,700/year for a 100 gpm plant.

Using a linear relationship to scale up the resin and isopropyl alcohol required for the two process flow rates gives:

Resin:

200 gpm process: $\$63,000 \left(\frac{200}{100}\right) = \$126,000$

300 gpm process: $\$63,000 \left(\frac{300}{100}\right) = \$189,000$

Isopropyl alcohol:

200 gpm process: $(\$46,700/\text{year}) \left(\frac{200}{100}\right) = \$93,400/\text{year}$

300 gpm process: $(\$46,700/\text{year} \left(\frac{300}{100}\right) = \$140,100/\text{year}$

Blecker and Nichols (1973) reported that the annual maintenance cost for each process is about 5% of the installed equipment cost, or $8,400 and $10,600, respectively.

The operating labor time is estimated at 9 man-hours/day on a 24 hr/day operating basis for the 100 gpm system based upon the estimates given for ion exchangers (Blecker and Nichols, 1973). This gives a requirement of 3,150 man-hours annually (based on 350 operating days/year). To scale this labor time up to the 200 and 300 gpm process flow rates, the "one-fourth factor" is used (Popper, 1970). This method (see Appendix B) gives the estimated operating labor time for each process as follows:

200 gpm process operating labor: $(3,150 \text{ hr}) \left(\frac{200}{100}\right)^{0.25} = 3,750 \text{ hr}$

300 gpm process operating labor: $(3,150 \text{ hr}) \left(\frac{300}{100}\right)^{0.25} = 4,150 \text{ hr}$

Rohm and Haas (Kennedy, 1973) estimates that the expected life of the XAD-4 resin process equipment is 10 years and that the life of XAD-4 resin

EXHIBIT
13
PENNGID-Bayonne, N. J.

charge is 5 years for the purpose of depreciation of the installed costs of the capital equipment and resin.

Reductive Degradation System Costs - Envirogenics Systems Company (Sweeny et al., December 1973) designed a pilot plant demonstration system and estimated the cost of a reductive degradation process to remove the endrin from wastewater flowing at 100 gpm. The system is fully described in the Envirogenics Report (Sweeny, December 1973) and the associated costs (1973 dollars) are given in detail.

In this document the installed capital equipment costs were estimated by Environgenics Systems Company (Sweeny, December 1973) to be $58,900. These costs were itemized as follows:

Purchased Parts

2 Reagent mix tanks, 200 gal. with mixers, low-level alarm and proportional feed pump	$3,000
1 Transfer pump with low-level alarm	1,000
1 pH adjustment tank, approximately 2,000 gal.	2,000
1 Mixer and impeller, 2 h.p.	3,000
1 Low and high level alarm for above	500
1 5 h.p. feed pump	700
1 pH sensing and control unit	2,000
5 Rotameters	900
Valves and piping	1,810
5 Reactor columns with distributors	10,000

Reagents	190
Total	25,100
Contingency on purchased parts	5,000
	30,100
Subcontracts	
Mechanical and electrical construction	20,000
Slab and related civil works	4,000
Total	24,000
Contingency on subcontracts	4,800
	28,800
Total	$58,900

The 1973 Chemical Engineering Plant Cost Index was 144.1 (Chemical Engineering, 1975a) so that the April 1975 cost of the reductive degradation process is:

$$(\$58,900)\left(\frac{180.6}{144.1}\right) = \$73,800$$

This cost is for a 100 gpm process and must be scaled up to 200 and 300 gpm, respectively. Since the process involves tanks, pumps, reactor columns, and miscellaneous equipment, the best available method for scale-up is the logarithmic relationship known as the "six-tenths factor," previously described (see Appendix B). Using this method, the installed cost for the reductive degradation process is:

200 gpm process: $\$73,800 \left(\frac{200}{100}\right)^{0.6} = \$111,900$

300 gpm process: $\$73,800 \left(\frac{300}{100}\right)^{0.6} = \$142,700$

The material costs for the system are the replacement of the iron reductant, the copper catalyst, and the sodium carbonate consumed in the process operation. Envirogenics Systems Company (Sweeny, December 1973) determined that the losses of iron reductant for processing existing endrin wastewater were 5.0 mg/liter of effluent, and losses of copper catalyst were 0.1 mg/liter of effluent. The amount of sodium carbonate required to adjust the pH of the wastewater to 7.0 was determined to be 126 lb/day for the 100 gpm plant. Sodium carbonate was used by Envirogenics and is used in this estimate, though its cost is higher than, say, lime. Since it is not known whether or not lime can be used as a neutralizing agent in this process, the savings realized from using the cheaper lime cannot be determined. The difference in price of the two neutralizing agents would not greatly affect the overall process cost.

The annual material usage for the 100 gpm process, then, is as follows:

Iron reductant: $\left(\frac{5.0 \text{ mg Fe}}{\text{liter}}\right)\left(\frac{100 \text{ gal.}}{\text{min}}\right)\left(\frac{3.85 \text{ liter}}{\text{gal.}}\right)\left(\frac{1,440 \text{ min}}{\text{day}}\right)\left(\frac{2.2 \times 10^{-6} \text{ lb}}{\text{mg}}\right)\left(\frac{350 \text{ day}}{\text{year}}\right)$

$= \underline{2,130 \text{ lb/year}}$

Copper catalyst: $\left(\frac{0.1 \text{ mg Cu}}{\text{liter}}\right)\left(\frac{100 \text{ gal.}}{\text{min}}\right)\left(\frac{3.85 \text{ liter}}{\text{gal.}}\right)\left(\frac{1,440 \text{ min}}{\text{day}}\right)\left(\frac{2.2 \times 10^{-6} \text{ lb}}{\text{mg}}\right)\left(\frac{350 \text{ day}}{\text{year}}\right)$

$= \underline{45 \text{ lb/year}}$

Sodium carbonate: $\left(\frac{126\ \text{lb}}{\text{day}}\right)\left(\frac{350\ \text{days}}{\text{year}}\right) = \underline{44{,}100\ \text{lb/year}}$

The costs of replacing the iron reductant and copper catalyst are negligible since iron powder costs $0.20/lb and copper sulfate costs $0.70/lb (Chemical Marketing Reporter, 1975), and the quantities are quite small. The sodium carbonate cost, however, is substantial since its current price is about $100/ton (Chemical Marketing Reporter, 1975) and a large quantity is required. The sodium carbonate needed for the 200 gpm and 300 gpm processes is proportional to the flow rate so that the annual cost of sodium carbonate for the two plants is:

200 gpm plant: $\left(\frac{44{,}100\ \text{lb}}{\text{year}}\right)\left(\frac{200}{100}\right)\left(\frac{\$0.05}{\text{lb}}\right) = \$4{,}400/\text{year}$

300 gpm plant: $\left(\frac{44{,}100\ \text{lb}}{\text{year}}\right)\left(\frac{300}{100}\right)\left(\frac{\$0.05}{\text{lb}}\right) = \$6{,}600/\text{year}$

Blecker and Nichols (1973) reported that the annual maintenance costs are 5% of the installed capital equipment costs, or $5,600 and $7,100 for the 200 gpm and 300 gpm processes, respectively.

The operating labor time is estimated at 9 man-hours/day on a 24 hr/day operating basis. This gives a requirement of 3,150 man-hours annually (based on 350 operating days/year). Scaling this labor time up to the 200 and 300 gpm processes is accomplished with the "one-fourth"factor," previously mentioned, and the annual operating labor time for each process becomes:

200 gpm process operating labor: $(3{,}150 \text{ hr}) \left(\frac{200}{100}\right)^{0.25} = 3{,}750 \text{ hr}$

300 gpm process operating labor: $(3{,}150 \text{ hr}) \left(\frac{300}{100}\right)^{0.25} = 4{,}150 \text{ hr}$

The expected life of the reductive degradation process equipment is taken to be 10 years for the purpose of depreciation of the installed equipment costs (see Appendix B).

Costs for the Resin Adsorption System and Reductive Degradation System in Series - The cost of a system which puts the XAD-4 resin system and reductive degradation system in series is the same as the sum of the costs for each separate system with only one exception: Only one sedimentation and one filtration process is necessary for the two systems in series, that is, each system does not have a separate sedimentation and filtration process. Therefore, the cost of the two systems in series is the sum of the cost of the two separate systems less the cost of one sedimentation process and one filtration process.

The fact that the toxaphene content of the wastewater treated by the reductive degradation system is lower, since the wastewater has already been treated by the XAD-4 resin system, does not reduce the cost of the reductive degradation system in series to any extent for two reasons: (a) The amount of wastewater treated is the same for the reductive degradation system whether alone or in series with the XAD-4 resin system, and the reductive degradation system must be of approximately the same size in both cases; and (b) the loss of iron reductant and copper catalyst will be lower for

the reductive degradation system in series but the cost of operating the system in series is unaffected since the cost of replacing these materials is negligible.

Total Capital Investment Costs for the Resin Adsorption System and the Reductive Degradation System - The cost of purchasing and installing the capital equipment for each system has been presented in the previous discussions. In addition to the previous cost estimates a contingency of 30% is added to these costs to allow for unanticipated expenses. Table 7 summarizes and totals the capital investment for the three systems.

Annual Operating Costs for the Resin Adsorption System and the Reductive Degradation System

The total annual costs to operate each system at both the 200 and 300 gpm flow rates are estimated below. Most of these costs are a percentage of either the installed capital equipment cost or the labor costs previously described. The following list shows all of the cost items considered in this estimate.

Direct costs

- Materials
- Labor
- Supervision
- Payroll charges
- Maintenance
- Operating supplies
- Utilities
- Laboratory services

Indirect costs

- Depreciation
- Property taxes
- Insurance
- Capital cost
- Plant overhead

Table 7. INSTALLED CAPITAL EQUIPMENT COST FOR THE XAD-4 RESIN SYSTEM, THE REDUCTIVE DEGRADATION SYSTEM, AND THE XAD-4 RESIN SYSTEM AND REDUCTIVE DEGRADATION SYSTEM IN SERIES

	XAD-4 resin system		Reductive degradation system		Two systems in series	
	200 gpm	300 gpm	200 gpm	300 gpm	200 gpm	300 gpm
Sedimentation	26,300	32,900	26,300	32,900	26,300	32,900
Filtration	131,600	158,000	131,600	158,000	131,600	158,000
XAD-4 resin process						
Equipment	167,000	212,700	-	-	167,000	212,700
Resin	126,000	189,000	-	-	126,000	189,000
Reductive degradation system	-	-	111,900	142,700	111,900	142,700
Subtotal	450,900	592,600	269,800	333,600	562,800	735,300
Contingency, 30%	135,300	177,800	80,900	100,100	168,800	220,600
Total (1975 $)	586,200	770,400	350,700	433,700	731,600	955,900

Materials - The only material cost of any consequence is the sodium carbonate used to neutralize the wastewater and the isopropyl alcohol used to regenerate the resin (the Amberlite XAD-4 has a 5 year useful life and is depreciated with the capital equipment). These costs have been previously given.

Labor - Labor costs are wages paid to operating labor. The total annual labor required for the three systems (based on 350 operating days/year) is:

	Annual man-hours					
	XAD-4 resin system		Reductive degradation system		Two systems in series	
Process	200 gpm	300 gpm	200 gpm	300 gpm	200 gpm	300 gpm
Sedimentation	1,050	1,050	1,050	1,050	1,050	1,050
Filtration	1,050	1,050	1,050	1,050	1,050	1,050
XAD-4 resin process	3,750	4,150	-	-	3,750	4.150
Reductive degradation process	-	-	3,750	4,150	3,750	4,150
Total	5,850	6,250	5,850	6,250	9,600	10,400

The hourly earnings of production or nonsupervisory workers in the chemical and allied products industry was $5.18/hr in March 1975 (Monthly Labor Review, 1975). For April 1975, the estimated wage rate is $5.20/hr. This gives an annual operating labor cost for each of the systems as follows:

System	Flow rate (gpm)	Annual man-hours	Hourly wage	Annual operating labor cost
XAD-4 resin	200	5,850	$5.20	$30,400
	300	6,250	5.20	32,500
Reductive degradation	200	5,850	5.20	30,400
	300	6,250	5.20	32,500
Two systems in series	200	9,600	5.20	49,900
	300	10,400	5.20	54,100

Supervision - Supervision of labor is normally estimated as a percentage of operating labor, a typical value being 20% (Jelen, 1970). Using this typical value of 20% of operating labor costs for labor supervision costs gives the following estimates:

	XAD-4 resin system		Reductive degradation system		Two systems in series	
	200 gpm	300 gpm	200 gpm	300 gpm	200 gpm	300 gpm
Annual labor supervision cost	$6,100	$6,500	$6,100	$6,500	$10,000	$10,800

Payroll charges - These costs are the result of the many fringe benefits employees receive in addition to their salaries. Recent emphasis on these benefits in labor contracts make this cost substantial and it is steadily increasing with time. According to Perry and Chilton (1973), the sum of fringe benefits may add between 15 and 40% to the wage rate of employees, and this varies widely from company to company. In this estimate, payroll charges (fringe benefits) are taken to be 30% of the wages paid to both labor and supervision. These payroll charges are thus estimated to be:

System	Flow rate (gpm)	Total operating labor and supervision cost	Payroll Charge
XAD-4 resin	200	$36,500	$11,000
	300	39,000	11,700
Reductive degradation	200	36,500	11,000
	300	39,000	11,700
Two systems in series	200	59,900	18,000
	300	64,900	19,500

Maintenance - Maintenance costs have been determined previously for each process. They are summarized here to give the total annual maintenance costs for each system.

	Annual maintenance cost ($)					
	XAD-4 resin system		Reductive degradation system		Two systems in series	
Process	200 gpm	300 gpm	200 gpm	300 gpm	200 gpm	300 gpm
Sedimentation	$3,900	$4,900	$3,900	$4,900	$3,900	$4,900
Filtration	6,600	7,900	6,600	7,900	6,600	7,900
XAD-4 resin process	8,400	10,600	-	-	8,400	10,600
Reductive degradation process	-	-	5,600	7,100	5,600	7,100
Total	$18,900	$23,400	$16,100	$19,900	$24,500	$30,500

Operating supplies - Operating supplies are items such as lubricating oil, instrument charts, etc., that are neither raw nor repair materials. The cost of these items is typically 6% of labor costs (Jelen, 1970). This amounts to an annual cost for operating supplies of:

	XAD-4 resin system		Reductive degradation system		Two systems in series	
	200 gpm	300 gpm	200 gpm	300 gpm	200 gpm	300 gpm
Annual operating supplies cost	$1,800	$2,000	$1,800	$2,000	$3,000	$3,200

Utilities - The utilities required for the processes are primarily electrical power. Little water is required if we assume that processed wastewater is recycled to the filter backwash and sodium carbonate mixing tanks. The estimated annual electrical cost for the 100 gpm reductive degradation system is $1,350; for the XAD-4 resin system is $650 (Marks, September 1974); and for pumping 100 gpm of wastewater in the sedimentation and filtration process is $100.

These costs are scaled up by direct proportion to give an annual electrical cost to each system as follows:

	Annual electrical costs ($)					
	XAD-4 resin system		Reductive degradation system		Two systems in series	
Process	200 gpm	300 gpm	200 gpm	300 gpm	200 gpm	300 gpm
Sedimentation and filtration	200	300	200	300	200	300
XAD-4 resin process	1,300	2,000	-	-	1,300	2,000
Reductive degradation process	-	-	2,700	4,100	2,700	4,100
Total	1,500	2,300	2,900	4,400	4,200	6,400

Laboratory services - Laboratory services furnished to support the treatment processes and monitoring operations are estimated at 20% of labor cost (Jelen, 1970). The annual laboratory services cost for the systems, therefore, are:

	XAD-4 resin system		Reductive degradation system		Two systems in series	
	200 gpm	300 gpm	200 gpm	300 gpm	200 gpm	300 gpm
Annual laboratory service cost	$6,100	$6,500	$6,100	$6,500	$10,000	$10,800

Depreciation - Depreciation is a periodic charge that distributes the installed capital investment cost over its expected service life. The cost estimate uses straight line depreciation and assumes all capital assets have a zero salvage value (see Appendix B). The capital investment costs and expected lives of all depreciable assets have been previously given and are used below to determine the annual depreciation cost for the three systems (rounded to nearest $100).

		Annual depreciation cost ($)					
		XAD-4 resin system		Reductive degradation system		Two systems in series	
Capital asset	Life (years)	200 gpm	300 gpm	200 gpm	300 gpm	200 gpm	300 gpm
Sedimentation process	40	900	1,100	900	1,100	900	1,100
Filtration process	15	11,400	13,700	11,400	13,700	11,400	13,700
XAD-4 resin process	10	21,700	27,700	-	-	21,700	27,700
XAD-4 resin charge	5	32,800	49,100	-	-	32,800	49,100
Reductive degradation process	10	-	-	14,600	18,600	14,600	18,600
Total		66,800	91,600	26,900	33,400	81,400	110,200

Property taxes, insurance, and capital costs - Property taxes, insurance and capital costs are estimated as a percentage of the installed capital equipment cost. These costs are calculated and reported in this report separately to show the cost breakdown of these three items.

Jelen (1970) reports that property taxes are taken to be 2% of investment cost, and that insurance is generally about 1% of investment cost. Capital cost (or interest) is a charge to finance the investment expenditures. This

interest may be a real cost when funds are borrowed to finance the investment, or an assumed cost when internal funds are used (since internal funds would earn interest if loaned out rather than purchase capital assets). The annual rate of interest (see Appendix B) has varied widely in the recent past and is taken to be 10% for 10 years due to current market interest rates and current cost literature (Chemical Engineering, 1975b). As shown in Appendix B, this is equivalent to an annual interest rate of 6.3% of capital investment.

Using the above percentage gives the following indirect costs for the three systems:

	Annual cost ($)					
	XAD-4 resin process		Reductive degradation system		Two systems in series	
Cost item	200 gpm	300 gpm	200 gpm	300 gpm	200 gpm	300 gpm
Property taxes (2%)	11,700	15,400	7,000	8,700	14,600	19,100
Insurance (1%)	5,900	7,700	3,500	4,300	7,300	9,600
Capital cost (6.3%)	36,900	48,500	22,100	27,300	46,100	60,200

Plant overhead - Plant overhead is a charge to the costs of the manufacturing facility which are not chargeable to any particular operation and are normally charged on an allotted basis. Overhead includes such cost items as plant supervision, plant guards, janitors, cafeterias, administrative offices, accounting, purchasing, etc. Overhead costs will vary from company to company and are usually calculated as a percentage of direct labor cost or a percentage of installed capital investment for the entire

facility, and allocated to each operation based on its labor or investment cost.

Jelen (1970) reports that plant overhead can range from 40 to 60% of direct labor costs or 15 to 30% of direct costs. In this report, the plant overhead is estimated to be 20% of the direct costs.

Total Cost Estimates for the Resin Adsorption System and the Reductive Degradation System

The total costs of the resin adsorption system, the reductive degradation system and the two systems in series are given in Table 8. The table shows that the total installed capital equipment costs for the three systems are: (a) XAD-4 resin system, $586,200 (200 gpm) and $770,400 (300 gpm); (b) reductive degradation system, $350,700 (200 gpm) and $433,700 (300 gpm); and (c) the two systems in series, $731,600 (200 gpm) and $955,900 (300 gpm). The estimated total annual operating costs are: (a) $324,300 and $433,200; (b) $154,100 and $181,800; and (c) $410,300 and $537,500, respectively. The estimated cost (per 1,000 gal. of effluent) of treating the toxaphene wastewater effluent is (a) $3.21 and $2.87; (b) $1.53 and $1.20; and (c) $4.07 and $3.55, respectively. The estimated unit operating cost to treat toxaphene wastewater per pound of toxaphene product (based on 50 million pounds of annual production) are: (a) $0.0065 and $0.0087; (b) $0.0031 and $0.0036; and (c) $0.0082 and $0.0108, respectively. (The current sale price of toxaphene is reported to be 38 to 40¢/lb (Meiners and Mumma, 1975b)).

Table 8. TOTAL INVESTMENT COST AND ANNUAL OPERATING COST FOR THREE TOXAPHENE WASTEWATER TREATMENT SYSTEMS TREATING EITHER 200 OR 300 GAL/MIN WASTEWATER EFFLUENT

Cost item	XAD-4 resin system		Reductive degradation system		Two systems in series	
	200 gpm	300 gpm	200 gpm	300 gpm	200 gpm	300 gpm
Total installed capital equipment cost (1975 $)	586,200	770,400	350,700	433,700	731,600	955,900
Annual operating costs (1975 $)						
Direct costs						
Materials	93,400	140,100	4,400	6,600	97,800	146,700
Labor	30,400	32,500	30,400	32,500	49,900	54,100
Supervision	6,100	6,500	6,100	6,500	10,000	10,800
Payroll charges	11,000	11,700	11,000	11,700	18,000	19,500
Maintenance	18,900	23,400	16,100	19,900	24,500	30,500
Operating supplies	1,800	2,000	1,800	2,000	3,000	3,200
Utilities	1,500	2,300	2,900	4,400	4,200	6,400
Laboratory	6,100	6,500	6,100	6,500	10,000	10,800
Subtotal	169,200	225,000	78,800	90,100	217,400	282,000

Table 8 (Concluded)

Cost item	XAD-4 resin system		Reductive degradation system		Two systems in series	
	200 gpm	300 gpm	200 gpm	300 gpm	200 gpm	300 gpm
Indirect costs						
Depreciation	66,800	91,600	26,900	33,400	81,400	110,200
Property taxes	11,700	15,400	7,900	8,700	14,600	19,100
Insurance	5,900	7,700	3,500	4,300	7,300	9,600
Capital cost	36,900	48,500	22,100	27,300	46,100	60,200
Plant overhead	33,800	45,000	15,800	18,000	43,500	56,400
Subtotal	155,100	208,200	75,300	91,700	192,900	255,500
Total annual operating costs (1975 $)	324,300	433,200	154,100	181,800	410,300	537,500
Unit operating costs						
Cost ($)/1,000 gal. effluent	3.21	2.87	1.53	1.20	4.07	3.55
Cost, $/lb of toxaphene (50 million pounds produced in 1975)	0.0065	0.0087	0.0031	0.0036	0.0082	0.0108

Carbon Adsorption Process Costs

As indicated in Figure 12, the toxaphene process wastewater will require (a) sedimentation, (b) filtration, and (c) neutralization prior to adsorption on carbon. The costs of sedimentation and filtration have been discussed earlier in this report, and the costs of the neutralization were discussed in the portion of this report dealing with the costs of the reductive degradation process.

The capital equipment costs of the carbon adsorption unit in the system are estimated below at two contact times. Following this are the cost summaries for the entire system which includes sedimentation, filtration, neutralization and carbon adsorption.

A conceptual flow diagram for a carbon adsorption process is shown in Figure 12. The portions of this process which deal with removal of suspended solids and pH adjustment in the wastewater are taken to be identical to the process steps of sedimentation, filtration and neutralization, which are used in the reductive degradation system. Hager (1974) indicates that suspended solids in amounts exceeding about 50 mg/liter should be removed prior to treatment of effluent in carbon adsorption beds and that pH adjustment can be employed to enhance adsorption efficiency.

Following removal of suspended solids, the wastewater is conducted through a two-stage carbon adsorption system which consists essentially of (a) two on-stream carbon adsorption units operating in series and one standby unit packed with granular activated carbon, and (b) the required auxiliary equipment (pumps, piping, process instrumentation, etc.).

When the concentration of toxaphene in the effluent from the first unit is equivalent to the feed concentration the carbon in the unit is exhausted and the unit is taken off stream (Hutchins, 1975a). The second unit then becomes the lead unit and the standby column is put on stream as the second column in the series. The exhausted unit is discharged, refilled with fresh carbon, and used as standby. Because of the small requirement for activated carbon, regeneration of the carbon is not economically justified (Hutchins, 1975b). The exhausted carbon is disposed of by incineration; the costs for incineration are not included in this study.

The cost of a carbon adsorption process to treat 200 gpm of toxaphene contaminated wastewater is estimated from cost information obtained from two sources. The first source is Mr. Roy H. Hutchins, Development Associate, Product Development Department, ICI United States, Inc., Wilmington, Delaware (Hutchins, 1975a). The second source is a process design manual for carbon adsorption (Cornell, 1973).

The treatability of a particular wastewater by activated carbon and the relative capacity of carbon for treatment can be estimated from adsorption isotherm data, obtained by batch testing. However, carbon performance and design criteria are best determined by pilot tests under dynamic flow conditions. The required contact time for a given carbon adsorber column (i.e., the residence time required for the wastewater in a carbon column) is an important design consideration for carbon adsorption systems. The contact time data can only be accurately determined by pilot tests which

simulate full-scale operating conditions. Unfortunately, contact time data of this type are not available. Therefore, two different assumed values of contact time were used in this study as a means for estimating a range of investment and operating costs. The two contact times considered were:

1. Thirty minute (30 min) contact time (15 min retention in each of two carbon columns in series). This retention time was shown to be effective for endrin by data reported by Robeck (1965) (Table 13, p. 198).

2. Sixty minute (60 min) contact time (30 min retention in each of two carbon columns in series).

Capital Investment Costs for Carbon Adsorption System with 30 Min Contact Time

As recommended by Hutchins (1975a) the adsorption isotherm in Figure 8 by Hager (April 1974) was extrapolated to determine the toxaphene removal per unit of carbon corresponding to a toxaphene concentration of 500 ppb (i.e., the estimated concentration in the wastewater to be treated by carbon adsorption). The value obtained by extrapolation is 7% weight pickup. This isotherm applies for carbon contact with toxaphene in distilled water. Robeck (1965, Figure 6, p. 192) shows a relationship between the adsorption capacities; the adsorption capacity is greater in distilled water than in river water. River water most closely approximates the operating conditions which would be encountered. Making an adjustment for river water results in a loading value of about 3.9% (0.039 lb pesticide adsorbed per pound of carbon used).

The total quantity of toxaphene to be removed per day (reduction from 500 to < 5 ppb) by the conceptual adsorption system is estimated by considering that final effluent may contain 2 ppm toxaphene.

300 gpm x 3.785 liter/gal x 500 µg/liter = 567,750 µg/min, toxaphene entering

300 gpm x 3.785 liter/gal x 2 µg/liter = 2,270 µg/min, toxaphene leaving

Difference (rounded) = ~ 565,500 µg/min, toxaphene retained on carbon

The estimated carbon requirement at 3.9% pickup is:

$$\frac{0.565 \text{ g/min} \times 60 \times 24}{453.6 \times 0.039} = 46 \text{ lb carbon required per day}$$

Hutchins (1975a) has stated that the efficient use of carbon in the adsorption system can be maximized by a counter-current type of operation as depicted in Figure 12. In this conceptual process, two adsorber columns are operated in series continuously, while a third adsorber unit is always held on standby. All three columns would have the same physical size and initial fresh carbon charge. When break-through occurs in the first absorber (i.e., the total charge becomes fully spent) the unit is taken out of service. The second column then becomes the lead column (No. 1), and the standby adsorber is then placed in service as the second adsorber. The original No. 1 adsorber column is then discharged, the spent carbon disposed of as solid waste to be incinerated and the drained wastewater is reprocessed through the system; the column is then recharged with fresh carbon and held on standby for a subsequent repetition of the operation

described above. In this arrangement there is no regeneration of spent carbon. Hutchins (1975a) has estimated that one carbon unit (~ 12,000 lb C) would become spent about every 5 months.

On the basis of data provided by Robeck (1965) and Cornell (1973) and at the recommendation of Hutchins (1975a), it was considered that the two on-stream adsorbers would have a total wastewater to carbon contact time of 30 min (i.e., 15 min contact in each of two adsorbers) and that the flow rate through the carbon bed would be 4 gpm/ft^2 of adsorber bed cross-sectional area.

At 300 gpm, a 15 min contact time corresponds to a holding volume per vessel of 300 x 15 or 4,500 gal. or 602 ft^3. Cornell (1973) recommends 50% additional adsorber volume to provide for backwash operations. Thus, the total volume of each vessel would be 1.5 x 4,500 or 6,750 gal. or 903 ft^3. On this basis, the size of each contactor would be approximately 10 ft I.D. ($\frac{300}{4}$ = 75 sq ft cross-sectional area) by about 11 ft high. Hutchins (1975a) has recommended an initial charge of 12,000 lb carbon* per vessel. Considering downflow operation of the contactors, the effective volume (carbon volume) in each adsorber (contactor) would be

$$\frac{12{,}000 \text{ lb}}{23 \text{ lb/ft}^3} = 522 \text{ ft}^3 \text{ (approximately a 7-ft bed depth of carbon)}$$

Cost for Carbon Contactor Units - Cost data reported by Cornell (1973) (Figure 5-1, p. 5-4) were used to estimate the installed cost for three

* Hydrodarco 4000 sold by ICI, United States, Inc.

equal-sized carbon adsorber columns (contactors). Cornell's Figure 5 relates the construction cost to effective contactor volume. Since the volume (522 ft^3) of the contactors considered in this study is off-scale on the low side in this figure, the 0.6 power factor relationship was used to estimate the contactor cost. A contactor with an effective volume of 1,000 ft^3 has a construction cost of $80,000 (Figure 5-1, Cornell, 1973). By the 0.6 factor relationship (see Appendix B):

$$\$80,000 = \left(\frac{1,000}{522}\right)^{0.6} C \qquad C = \$54,200/\text{contactor}$$

Then, the cost for three contactors would be 3 x $54,200 or $162,600. Updating this cost for inflationary changes using Marshall and Swift cost indices for 1975 and 1973 gives:

$$\frac{443.8}{344.1} \times \$162,600 = \$209,700$$

Cost for Influent Pump Station - As shown in the Cornell (1973) cost data (Figure 5-5, p. 5-11), the cost for an influent pump station for a 300 gpm or 0.43 x 10^3 gpd is about $10,000. Updating by Marshall and Swift cost indices for 1973 and 1975 gives:

$$\frac{443.8}{344.1} \times \$10,000 = \$12,900$$

Initial Carbon Charge and Carbon Replacement Costs - As recommended by Hutchins (1975a) each of three contactors would have an initial charge of 12,000 lb of granular activated carbon (Hydrodarco 4000, ICI, United States, Inc.) at a cost of $0.38/lb. Then,

3 x 12,000 x $0.38 = $13,700

Estimated make-up carbon costs (at 2 refills per year) is 2 x 12,000 x $0.38 = $9,100/year.

Plant investment costs for the carbon adsorption equipment (30 min contact system) are:

	Estimated Installed costs (1975 $)
Influent pump station	$ 12,900
Carbon contactors (3)	209,700
Initial carbon charge	13,700
Subtotal	$236,300
Adjustment to account for engineering, legal, administrative land and interst expenses, 20% of subtotal (Cornell, 1973)	47,000
Total	$283,300

Capital Investment Costs for Carbon Adsorption Unit with 60 Min Contact Time

At 300 gpm, a 30 min contact time in each carbon adsorber corresponds to a holding volume per vessel of 300 x 30 = 9,000 gal. or 1,204 ft^3. Cornell (1973) recommends 50% additional adsorber volume to provide for backwash operation. Thus, the total volume of each vessel would be 1.5 x 9,000 or 13,500 gal. For a flow rate of 4 gpm/ft^2, the cross-sectional area of each contactor would be $\frac{300}{4}$ = 75 ft^2 and the effective volume would be 2 x 522 or 1,044 ft^2.

Cost data by Cornell (1973) (Figure 5-1, p. 5-4) show that the cost for a contactor with 1,044 ft^3 of effective volume is about $80,000. For three contactors, the cost is 3 x $80,000 or $240,000. Updating by Marshall and Swift cost indices for 1975 and 1973 gives:

$$\frac{443.8}{344.1} = \$240,000 = \$309,500$$

The initial carbon charge would be twice as large as for the 30 min total contact system or 2 x $13,700 = $27,400.

It is considered that the influent pump station cost would be the same as for the 30 min contact system or $12,900.

Summary of Capital Investment - Estimated plant investment costs for the carbon adsorption equipment (60 min contact time) are:

Item	Estimated Installed Costs (1975 $)
Influent pump station	$ 12,900
Carbon contactors (3)	309,500
Initial carbon charge	27,400
Subtotal	$349,800
Adjustment to account for engineering, legal, administrative, land and interest expenses; 20% of subtotal (Cornell, 1973)	70,000
Total	$419,800

Summary of Installed Capital Equipment Costs - Table 9 summarizes the capital investments for the two carbon contact times considered in this study.

Table 9. INSTALLED CAPITAL EQUIPMENT COST FOR THF 300 GPM CARBON ADSORPTION SYSTEM

Process	Capital investment cost (1975 $)	
	Contact time, 30 min	Contact time, 60 min
Sedimentation	$ 33,000	$33,000
Filtration	158,000	158,000
Carbon adsorption	283,300	419,800
Subtotal	474,300	610,800
Contingency, 30% (see Appendix B)	142,300	183,200
Total	$616,600	$794,000

Annual Operating Costs for Carbon Adsorption System (Including Sedimentation, Filtration, and Neutralization)

The total annual costs to operate the system at the 300 gpm flow rate are estimated below. Most of these costs are a percentage of either the installed capital equipment cost or the labor costs previously described. The following list shows all of the cost items considered in this estimate.

Direct costs

Materials
Labor
Supervision
Payroll charges
Maintenance
Operating supplies
Utilities
Laboratory services

Indirect costs

Depreciation
Property taxes
Insurance
Capital cost
Plant overhead

Operating Labor and Maintenance for Carbon Adsorption Plant - Operating labor time is estimated from cost data reported by Cornell (1973) (Figure 5-7, p. 5-18). The flow (432,000 gpd) for the conceptual carbon adsorption system is off-scale on Figure 5-7. The one-fourth factor (see Appendix B) is used to scale down labor requirements from one plant size to a smaller plant size. From Figure 5-7 (Cornell, 1973), the operating labor requirement for a flow of 2 MGD is 750 annual man-hours. Scaling down this value by the one-fourth factor (see Appendix B) gives:

$$750 = \left(\frac{2}{0.432}\right)^{0.25} C$$

C = 510 man-hours for a flow of 0.432 M gpd (300 gpm)

Operating labor time for the 60 min contact system is taken to be the same as for the 30 min contact system or 510 man-hours per year.

The annual maintenance cost for the carbon adsorption operation is estimated as 5% of capital investment (see Appendix).

For 30 min contact system, 0.05 x $283,300 = $14,200.

For 60 min contact system, 0.05 x $419,800 = $21,000.

Materials - The material costs are the limestone ($660/year) used to neutralize the wastewater and the activated carbon makeup each year ($9,100/year).

Labor - Labor costs are wages paid to operating labor. These costs are taken to be the same for the 30 and 60 min contact systems. The total annual operating labor required for the plant is:

Process	Annual man-hours
Sedimentation	1,050
Filtration	1,050
Neutralization	1,050
Carbon adsorption	510
Total	3,660

The hourly earnings of production or nonsupervisory workers in the chemical and allied products industry was $5.18/hr in March 1975 (Monthly Labor Review, May 1975). For April 1975, the estimated wage rate is $5.20/hr. This gives an annual operating labor cost of $19,000.

Supervision - Supervision of labor is normally estimated as a percentage of operating labor, a typical value being 20% (Jelen, 1970). Using this typical value of 20% of operating labor costs for labor supervision costs gives a cost of $3,800/year. (Applies for both 30 min and 60 min contact systems).

Payroll Charges - This cost is the result of the many fringe benefits employees receive in addition to their salaries. Recent emphasis on these benefits in labor contracts make this cost substantial and it is steadily increasing with time. The sum of fringe benefits may add between 15 and 40% to the wage rate of employees (Perry and Chilton, 1973), and this varies widely from company to company. In this estimate, payroll charges (fringe benefits) are taken to be 30% of the wages paid to both labor and supervision. This cost amounts to $6,800. (Applies for both the 30 min and the 60 m. contact systems.)

Maintenance - Maintenance costs have been determined previously for each part of the process. They are summarized here to give the total annual plant maintenance costs.

Process	Annual maintenance	
	30 min system	60 min system
Sedimentation	$ 5,000	$ 5,000
Filtration	7,900	7,900
Neutralization	2,900	2,900
Carbon adsorption	14,200	21,000
Total	$30,000	$36,800

Operating Supplies - Operating supplies are items such as lubricating oil, instrument charts, etc., that are neither raw or repair materials. The cost of these items is typically 6% of labor costs (Jelen, 1970) and amounts to an annual cost of $1,100. (Applies for both 30 min and 60 min contact systems.)

Utilities - The utilities required for the process are primarily electrical power. The estimated annual electrical cost for this system estimated from cost data reported by Cornell (1973) (Figure 5-9, p. 5-20). Figure 5-9 shows an annual power cost (at $0.02/KWH) of 4,600/year. Adjusting from 1973 to 1975 by Marshall and Swift cost indices for electrical power industries gives $\frac{437.7}{322.2} \times 4{,}600 = \$6{,}200$. (Applies for both the 30 min and 60 min contact systems.)

Laboratory - Laboratory services furnished to support the treatment process operation are estimated at 20% of labor cost (Jelen, 1970) or $3,800/year. (Applies for both the 30 min and 60 min contact systems.)

Depreciation - Depreciation is a periodic charge that distributes the installed capital investment cost over its expected service life. This cost estimate uses straight line depreciation and assumes all capital assets have a zero salvage value. The capital investment costs and expected lives of all depreciable assets have been previously given and are summarized and totaled below (rounded to nearest $100):

Process	Life (years)	Annual depreciation cost ($)	
		30 min system	60 min system
Sedimentation	40	800	800
Filtration	15	10,500	10,500
Carbon adsorption	10	28,300	42,000
Total		39,600	53,300

Property Taxes, Insurance, and Capital Costs - Property taxes, insurance and capital costs are estimated as a percentage of the installed capital

equipment cost. These costs are calculated and reported in this report separately to show the cost breakdown of these three items.

Property taxes are taken to be 2% of investment cost, and insurance is generally about 1% of investment cost (Jelen, 1970). Capital cost (or interest) is a charge to finance the investment expenditures. This interest may be a real cost when funds are borrowed to finance the investment, or an assumed cost when internal funds are used (since internal funds would earn interest if loaned out rather than used to purchase capital assets). The annual rate of interest has varied widely in the recent past and is taken to be 6.3% per annum (see Appendix B).

Using the above percentages gives the following indirect costs for this system:

Cost item	Annual cost ($)	
	30 min contact system	60 min contact system
Property taxes (2%)	12,300	15,900
Insurance (1%)	6,200	7,900
Capital cost (6.3%)	38,800	50,000

Plant Overhead - Plant overhead is a charge to the costs of the manufacturing facility which are not chargeable to any particular operation and are normally charged on an allotted basis. Overhead includes such cost items as plant supervision, plant guards, janitors, cafeterias, administrative offices, accounting, purchasing, etc. Overhead costs will vary from company to company and are usually calculated as a percentage of direct labor or a percentage of installed capital investment for the entire

facility, and allocated to each operation based on its labor or investment cost.

Plant overhead can range from 40 to 60% of direct labor costs or 15 to 30% of direct costs (Jelen, 1970). We estimate that plant overhead is 20% of direct costs in this report.

Total Cost for Carbon Adsorption System (Including Costs of Sedimentation, Filtration, and Neutralization)

The total cost of the carbon adsorption system is the sum of the total capital investment costs plus the annual operating cost. These costs have been estimated in the preceding three sections of this report.

The total estimated capital investment costs for the carbon adsorption system are presented in Table 10.

Table 10. ESTIMATED TOTAL INVESTMENT AND ANNUAL OPERATING COSTS FOR GRANULAR ACTIVATED CARBON ADSORPTION SYSTEMS (300 gpm Toxaphene Wastewater Flow Rate)

Carbon adsorption system total contact time, min	Costs $ (1975) 30	60
Cost item		
Total installed capital equipment cost (including costs for sedimentation and filtration equipment)	616,600	794,000
Annual operating costs:		
Direct costs		
Materials	9,800	9,800
Operating labor	19,000	19,000
Supervision	3,800	3,800
Payroll charges	6,800	6,800
Maintenance	30,000	36,800
Operating supplies	1,100	1,100
Utilities	6,200	6,200
Laboratory charges	3,800	3,800
Subtotal	80,500	87,300
Indirect costs		
Depreciation	39,600	53,300
Property taxes and insurance	18,500	23,800
Capital cost (interest)	38,800	50,000
Plant overhead	16,100	17,500
Subtotal	113,000	144,600
Total (rounded)	194,000	232,000
Unit operating costs		
Cost ($)/1,000 gal. effluent	$1.28	$1.53
Cost, $/lb of toxaphene product (50 million pounds product in 1975)	0.0039	0.0046

REFERENCES

Black, Crow, Eidsners, Inc., Engineers, Houston, Texas (a subsidiary of Hercules, Inc.), "The Effect of Toxaphene on Sewage Treatment," a report to Hercules, Inc., September 1971.

Blecker, H. G., and T. M. Nichols, "Capital and Operations Costs of Pollution Control Equipment Modules--Vol. II--Data Manual, EPA-R5-73-023b, July 1973.

Borenstein, N., Pollution Control Research Department, Rohm and Haas Pollution Control Research Department, telephone communication with Mr. Gary Kelso, October 3, 1975.

Chaddock, R. E., Affidavit before the Environmental Protection Agency concerning proposed toxic pollutant effluent standards for aldrin/dieldrin, etc., FWPCA (307) Docket No. 1, Washington, D.C., March 15, 1974.

Chemical Engineering, "Economic Indicators, July 7 (1975a).

Chemical Engineering, p. 89, July 21 (1975b).

Chemical Marketing Reporter, April 29, 1975.

Cohen, J. M., L. J. Kamphake, A. E. Lempke, C. Henderson, and R. L. Woodward, "Effect of Fish Poisons on Water Supplies, Part I, Removal of Toxic Materials," J. Amer. Water Works Assoc., 52, 121551 (1960).

Cornell, Howland, Hayes, and Merryfield, Clair A. Hill and Associates, "Process Design Manual for Carbon Adsorption," U.S. Environmental Protection Agency, October 1973.

Cywin, A., and E. E. Martin, "Development Document for Proposed Effluent Limitations Guidelines and New Source Performance Standards for the Major Inorganic Product Segment of the Inorganic Chemicals Manufacturing Point Source Category," September 1973.

Dunn, C. L. Manager, Ecological Research, Synthetic Department, Hercules, Inc., Wilmington, Delaware, letter to Mr. C. E. Mumma, October 7, 1975.

Enviro-Labs, Inc., of Starkville, Mississippi, "Completion Report, Waste Water Treatability Studies, Vicksburg Chemical Company, Vicksburg, Mississippi," engineering report to Vicksburg Chemical Company, August 31, 1975 (report required for NPDES permits).

Ferguson, T. L., and Lawless, E. W., Visit to Hercules, Inc., offices, Wilmington, Delaware, on November 17, 1971, to discuss the production of toxaphene.

Ferguson, T. L., and A. F. Meiners, "Wastewater Management Review No. 3 - Toxaphene," Final Report, EPA Contract No. 68-01-2379, to the Hazardous and Toxic Substances Regulation Office, May 8, 1974.

Ferguson, T. L., and Mumma, C. E., Visit to Hercules, Inc., chemical plant at Brunswick, Georgia, on August 20, 1975, to discuss the production of toxaphene.

Gunther, F. A., "Reported Solubilities of 738 Pesticide Chemicals in Water," Residue Reviews, 20:1-145 (1968).

Hager, D. G., and J. L. Rizzo, "Removal of Toxic Organics from Wastewater by Adsorption with Granular Carbon," paper presented at the Environmental Protection Agency Technology Transfer Session on Treatment of Toxic Chemicals, Atlanta, Georgia, April 19, 1974.

Hicks, H. E., Manager, Hercules Plant at Brunswick, Georgia, Letter Report to Allen Cywin, Director, Effluent Guideline Division, EPA, June 24, 1975.

Hughes, R. A. et al., "Studies on the Persistence of Toxaphene in Treated Lakes," a thesis submitted to the Graduate School of the University of Wisconsin in 1970, published on demand by University Microfilms, Inc., Ann Arbor, Michigan (70-24, 751).

Hutchins, R. A., Development Associate, ICI United States, Inc., letter and telephone communication to C. E. Mumma, October 1975a.

Hutchins, R. A., "Activated Carbon Regeneration - Thermal Regeneration Costs," Chemical Engineering Progress, 71(5):80 (1975b).

Huritz, M., Rohm and Haas Company, telephone communication with Mr. Gary Kelso, October 2, 1975.

Jelen, F. C., Cost and Optimization Engineering, McGraw-Hill Book Company, New York (1970).

Jett, G., EGDB Assistant Project Officer (EPA), Visit to Hercules, Inc., plant at Brunswick, Georgia, on July 9, 1975.

Kennedy, D. C., "Treatment of Effluent From Manufacture of Chlorinated Pesticides With A Synthetic, Polymeric Adsorbent, Amberlite XAD-4," Environmental Science and Technology, 7(2):138 (1973).

Lair, M. D., and R. J. Bruner, EPA Surveillance and Analysis Division, Report on Investigation of Wastewater Discharges, Hercules, Inc., Brunswick, Georgia, for plant inspection conducted on March 3 to 6, 1975.

Marks, D. R., "Testimony of Daniel R. Marks Respecting Technolog, to Remove Endrin From Water," FWPCA (307) Docket No. 1, State of Tennessee, County of Shelby, March 14, 1974a.

Marks, D. R., "Status Report on Chlorinated Hydrocarbon Pesticide Removal From Wastewater," EPA Grant No. S-803159-01-0, Velsicol Chemical Corporation, Memphis, Tennessee, September 30, 1974b.

Meiners, A. F., and C. E. Mumma, Plant Visit, Tenneco Chemicals, Inc., Fords, New Jersey, October 13, 1975a.

Meiners, A. F., and C. E. Mumma, Plant Visit, Riverside Chemical Company, Groves, Texas, August 7, 1975b.

Meiners, A. F., and C. E. Mumma, Plant Visit, Vicksburg Chemical Company, Vicksburg, Mississippi, October 14, 1975c.

Monthly Labor Rev., Vol. 98, No. 5, May 1975.

NPDES Permit No. 0000116, Tenneco Chemicals, Inc. (1972).

NPDES Permit No. 2S DOXW2 000021, Tenneco Chemicals, Inc. (1972).

NPDES Permit No. GA 0003735, RAPP Permit Application (5 pages of Section 2, No. GA 0740YN 3 000 171) and NPDES permit of Hercules, Inc., Brunswick, Georgia (1974).

NPDES Permit No. TX 0062448, Riverside Chemical Company (1975).

NPDES Application, Factsheet for, Application No. MS 0027 995, Vicksburg Chemical Company (1975).

Oil, Paint and Drug, November 27, 1972.

Perry, R. H., and C. H. Chilton, Chemical Engineer's Handbook, 5th ed., McGraw-Hill Book Company, New York (1973).

Popper, H., Modern Cost--Engineering Techniques, p. 252, McGraw-Hill Book Company, New York (1970).

Robeck, G. G. et al., "Effectiveness of Water Treatment Process in Pesticide Removal," J. Amer. Water Works Assoc., 57, 181 (1965).

Rohm and Haas, "Preliminary Technical Notes, Amberlite® XAD-4" (1971).

Swank, R. R., Jr., Acting Chief, Industrial Pollution Branch, Southeast Environmental Research Laboratory, Athens, Georgia, Conference with A. F. Meiners and C. E. Mumma, September 29, 1975.

Sweeny, K. H., and J. R. Fischer, "Investigation of Means for Controlled Self-Destruction of Pesticides," Aerojet Final Report on FWQA Contract No. 14-12-596, Water Pollution Control Research Series 16040 ELO 06/70, June 1970.

Sweeny, K. H., and J. R. Fischer, "Decomposition of Halogenated Organic Compounds Using Metallic Couples," U.S. Patent No. 3,737,384, for U.S. Department of the Interior, June 1973.

Sweeny, K. H., A. F. Graefe, R. L. Schendel, and R. D. Cardwell, "Development of Treatment Process for Chlorinated Hydrocarbon Pesticide Manufacturing and Processing Wastes," Envirogenics Systems Company, EPA Contract 68-01-0083, July 1973.

Sweeny, K. H., A. F. Graefe, R. L. Schendel and R. D. Cardwell, "Development and Demonstration of Process for the Treatment of Chlorinated Cyclodiene Pesticide Manufacturing and Process Wastes," Envirogenics Systems Company, December 1973.

Sweeny, K. H., "Development of Treatment Process for Chlorinated Hydrocarbon Pesticide Manufacturing and Process Wastes," Report No. L-0305-25, Envirogenics Systems Company, EPA Contract No. 68-01-0083, May 1974.

Sweeny, K. H., "Status of Developments of Reductive Degradation Treatment of Endrin-Heptachlor and Chlordane Manufacturing Wastes," Envirogenics Systems Company, EPA Contract No. 68-01-0083, September 1974.

Sweeny, K. H., Program Manager, EPA Contract No. 68-01-0083, Envirogenics Systems Company, Personal communication to Mr. C. E. Mumma, Midwest Research Institute, October 6, 1975.

Vitalis, J. S., "Velsicol Plant Notes Summary," Record of Communication to Walter J. Hunt, Chief, Effluent Guidelines Development Branch, June 2, 1975.

Weston, Roy F., Inc., Draft, "Development Document for Effluent Limitations Guidelines and Standards of Performance - Miscellaneous Chemicals Industry," EPA Contract No. 68-01-2932, February 1975.

Worley, J. W., Works Manager, Tenneco Chemicals, Inc., Fords, New Jersey, Letter Report on Strobane®-T to Mr. W. J. Hunt, U.S. Environmental Protection Agency, Effluent Guidelines Division, Washington, D.C., August 13, 1975.

APPENDIX A

ENGINEERING INFORMATION PERTINENT TO TOXAPHENE WASTE TREATMENT AT THE HERCULES, INC., PLANT AT BRUNSWICK, GEORGIA

The information contained in this Appendix was obtained from an engineering report supplied by Mr. C. L. Dunn, Manager, Ecological Research, Hercules, Inc., to Mr. Richard K. Ballentine, Toxic Substances Branch, EPA, on December 16, 1975. This information was not received in time to be incorporated into the toxaphene manufacture report.

A. Background

Systematic sampling and determination of toxaphene content of Brunswick Plant waste effluent was undertaken in 1970. Monitoring prior to that time was done on an irregular schedule, but had identified toxaphene as an undesirable pollutant. Various methods for toxaphene pollution abatement were studied, including adsorption, thermal and chemical decomposition. Deep well injection was studied intensively and Earth Science, Inc., was contracted to develop a preliminary proposal which was completed January 20, 1969. Additional proposals were obtained from International Pollution Control, Inc., and Dow Chemical Company. Although the reports were generally favorable, both the Georgia Water Quality Commission and Hercules, Inc., had reservations about the desirability of this concept. By mutual agreement, this concept was dropped from consideration in the spring of 1970. Reconsideration of alternative treatment methods resulted in the design and installation of the present system. The Georgia Water Quality Commission issued a construction permit in early 1971, and the system was completed in stages during 1972. A schematic drawing of the toxaphene process and the related pollution abatement system can be found in Figure A-1.

B. Description of System

1. Containment

It was recognized from the beginning that the process area, packaging area, storage areas and all areas that might be contaminated with toxaphene would have to be enclosed by dikes, curbs or other suitable barriers. All process water and rainfall runoff is presently collected and treated. The area contained is indicated in Figure A-2, an aerial photo of the Toxaphene Area.

2. Sumps and Settling Tanks

All process water, spillage, floor drainings, etc., from the process area is treated in a settling tank to separate, recover and recycle any free toxaphene or toxaphene solution. A system of sumps is used for the same purpose in the solution makeup, packaging and shipping areas. Rainwater runoff is also passed through a number of sumps and toxaphene or toxaphene solution is also collected in these sumps and recycled.

3. Neutralization

All wastewater from the process area is neutralized. Since the bulk of this stream consists of dilute, waste by-product hydrochloric acid,

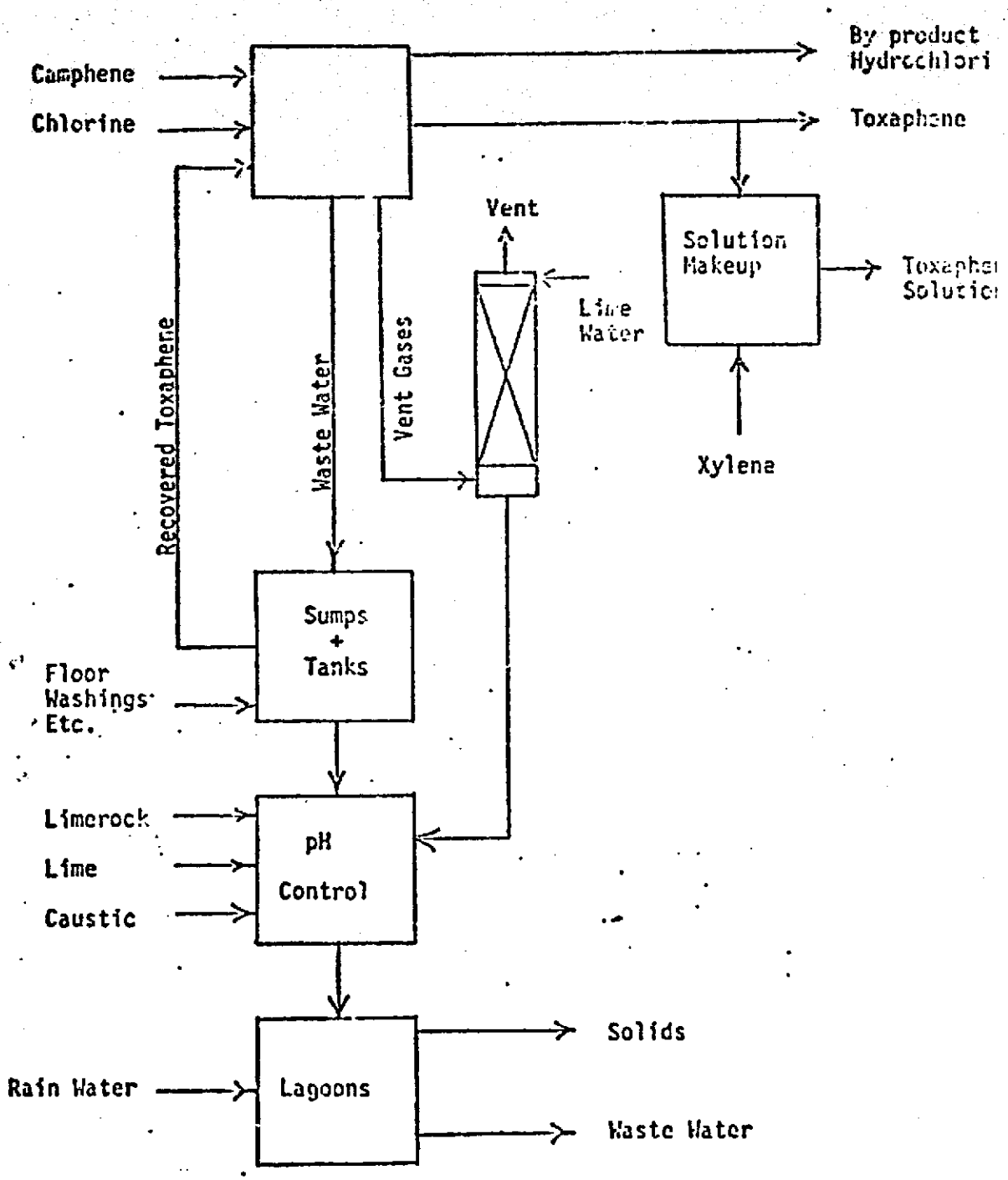

Figure A-1. Hercules toxaphene process schematic

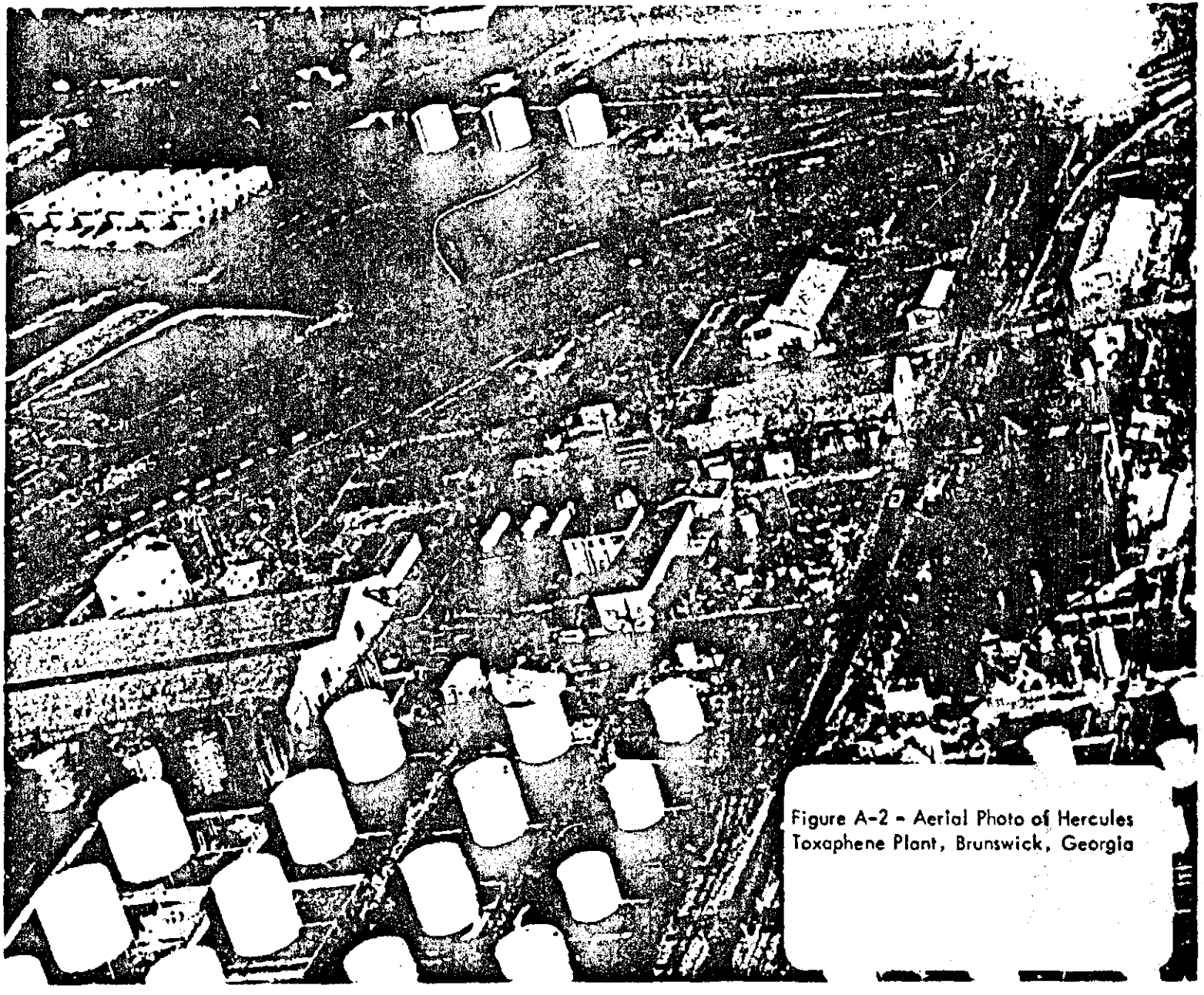

Figure A-2 - Aerial Photo of Hercules Toxaphene Plant, Brunswick, Georgia

these facilities are extensive. After the process wastewater is passed through the settling tank for recovery of free toxaphene, the wastewater stream is passed through several parallel limerock basins. Contact with crushed limerock neutralizes the bulk of the acidity. The effluent from the limerock basins is then combined with spent scrubbing liquors from the vent scrubbers and the pH of the combined streams is adjusted with caustic in a two-stage stirred tank. The heart of this pollution abatement design centers on the fact that toxaphene is strongly adsorbed on inorganic particulate matter originating in the limestone, lime and caustic neutralization steps. A great deal of work was carried out on both a laboratory and pilot scale to develop and prove in the effectiveness of this abatement process.

4. Solids Separation

All wastewater, after pH adjustment, is passed through a series of lagoons to settle out suspended solids. Rainwater from the rainwater lagoon is mixed with the influent to the solids separation lagoons. Solids separation is of course an essential feature of any pollution abatement system. In this case, however, solids separation serves a dual purpose. As noted above, because of the hydrophobic nature of toxaphene, the toxaphene present in the wastewater is strongly adsorbed on the separated solids. The source of the solids in the wastewater is the inert sand and clay present in the limerock used for neutralization. An aerial photo of the lagoon system can be found in Figure A-3.

5. Solid Waste Disposal

The solids collected in the lagoons are disposed of by landfill. The landfill operation is operated under permit from the Georgia Department of Natural Resources.

6. Miscellaneous

a. A special housekeeping crew is used to clean up spills, clean sumps and to maintain the high level of cleanliness necessary to meet the difficult effluent standard.

b. Essentially all maintenance is done within the contained area. If it is absolutely necessary to remove a piece of equipment from the contained area, it is thoroughly decontaminated.

c. Analyses are run in a separate laboratory. Unused samples are returned to the process. Sample containers are recycled without cleaning when possible. If not possible, disposable containers are used.

C. Design Criteria

The pH control system was essentially in operation before issuance of the permanent NPDES permit. Capacity and design are largely based on operating experience. The design criteria for the lagoon system is as follows:

	Influent	Effluent
Flow	300 gpm	300 gpm
Toxaphene	2,000 ppb toxaphene	200 ppb toxaphene
Solids	4-10 tons/day	Negligible
pH	Approximately neutral	Approximately neutral

The controlling design criteria was a maximum of 1 lb/day of toxaphene in the total plant effluent. Because of uncontrolled sources of toxaphene, the effluent from the lagoon must contain significantly less than 1 lb/day of toxaphene.

The influent to the lagoons is extremely variable and the limerock used for neutralization contains variable amounts of inert solids. Because of this variability and the difficulty of accurately sampling this mixture, the influent is not routinely sampled. The effluent is, however, sampled daily. In addition, the total plant effluent composed of the toxaphene waste plus all other process wastewater, is also sampled daily. This sampling is at the outfall designated 001. Reports are submitted to state and federal authorities at monthly intervals.

D. Method of Operating

Sumps and settling tanks are cleaned as needed and the recovered toxaphene returned to the appropriate process step. Limerock is fed to the system as needed by conventional conveying equipment. Caustic or acid is added to the influent to the pH adjustment facilities automatically as needed to achieve the desired pH. The desired pH is normally slightly acidic since a higher pH results in unnecessary difficult-to-settle hydroxides. Because of the relatively small quantity of toxaphene wastewater, compared to the total plant effluent, the slight acidity of the toxaphene effluent stream is insignificant.

Rainwater runoff surges are impounded in the rainwater lagoon and the rainwater is then mixed with the process wastewater at a uniform rate. The rainwater runoff is essentially neutral and requires no other treatment.

The present method of operating the lagoons is to pass the wastewater through two lagoons in series. The lagoons presently being used are baffled so as to divide them in half. Essentially, they are now the equivalent of four lagoons in series. The lagoons not now in service contain solids collected in prior service and are dewatering. These solids will be transferred to the drying bed in the near future prior to transporting to the landfill site. Figure A-3 clearly shows the drying bed (partially empty), the two lagoons in active service, the two lagoons dewatering and the rainwater lagoon.

E. Chemical Additive Rates

The only additives used are the alkalies used for pH control. In theory, about 0.67 lb of hydrochloric acid or equivalent must be neutralized for each pound of toxaphene produced. Some acid is sold and need not be neutralized. Some of the waste acid is neutralized in the vent scrubbers by caustic or lime and the balance is neutralized by lime, limerock or caustic. In 1974, consumptions of the various alkalies per pound of toxaphene were:

Lime	0.05 lb/lb
Caustic	0.016 lb/lb
Limerock	0.51 lb/lb

F. Pollution Abatement Efficiency

The design toxaphene abatement efficiency for the lagoon system was about 90%. The actual efficiency is probably greater than 95%. Containment and meticulous control of leaks and spills in process and materials handling has resulted in an appreciable lowering of the toxaphene load presented to the lagoon system.

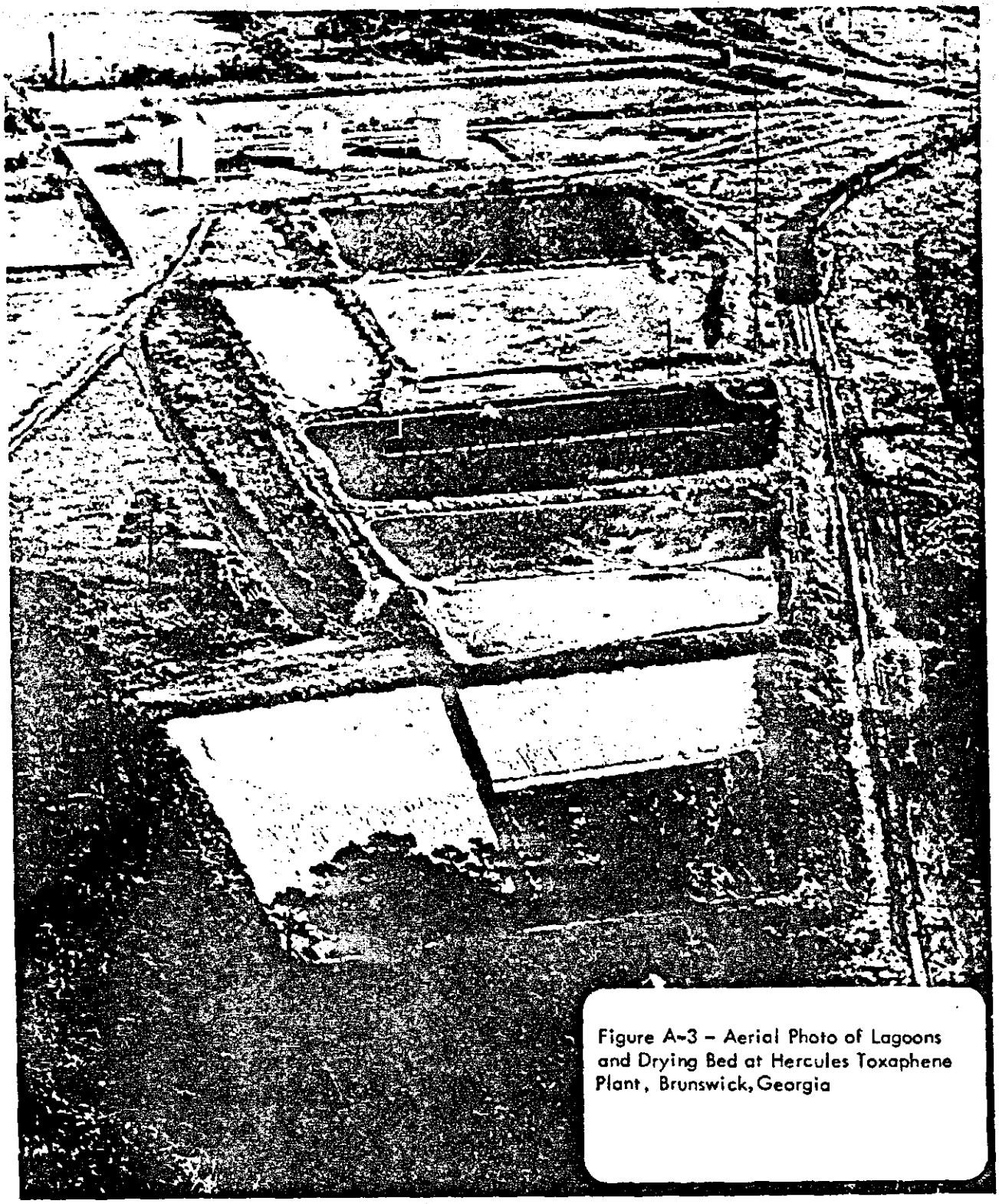

Figure A-3 – Aerial Photo of Lagoons and Drying Bed at Hercules Toxaphene Plant, Brunswick, Georgia

APPENDIX B

DEFINITION OF TERMS AND DISCUSSION OF CONVENTIONAL ENGINEERING PRACTICES USED IN ESTIMATING COSTS OF PESTICIDE WASTEWATER TREATMENT PROCESSES

Several terms used in the cost estimates require further definition and have been placed in this appendix to avoid a lengthy discussion in the text of the report. The terms which are defined and discussed in this appendix are (a) limits of error for cost estimates, (b) cost indexes, (c) six-tenths factor, (d) one-fourth factor, (e) payroll charges, (f) operating supplies, (g) control laboratory costs, (h) maintenance and repairs, (i) depreciation, (j) capital cost, (k) plant overhead, and (l) contingency for capital investment.

LIMITS OF ERROR FOR COST ESTIMATES

The probable limits of error for the study cost estimates in this report range from 30% above to 30% below the actual costs. Study cost estimates are commonly used to estimate the economic feasibility of a project before expending significant funds for piloting, market studies, land surveys, and requisitions. They may be off by 30% but they can be prepared at relatively low costs using minimum data as follows (see Figure A-1).

Location of site;

Rough sketches of process flow;

Preliminary sizing and material specifications of equipment;

Approximate sizes of buildings and structures;

Rough quantities of utilities;

Preliminary piping;

Preliminary motor list; and

Engineering and drafting man-hours.

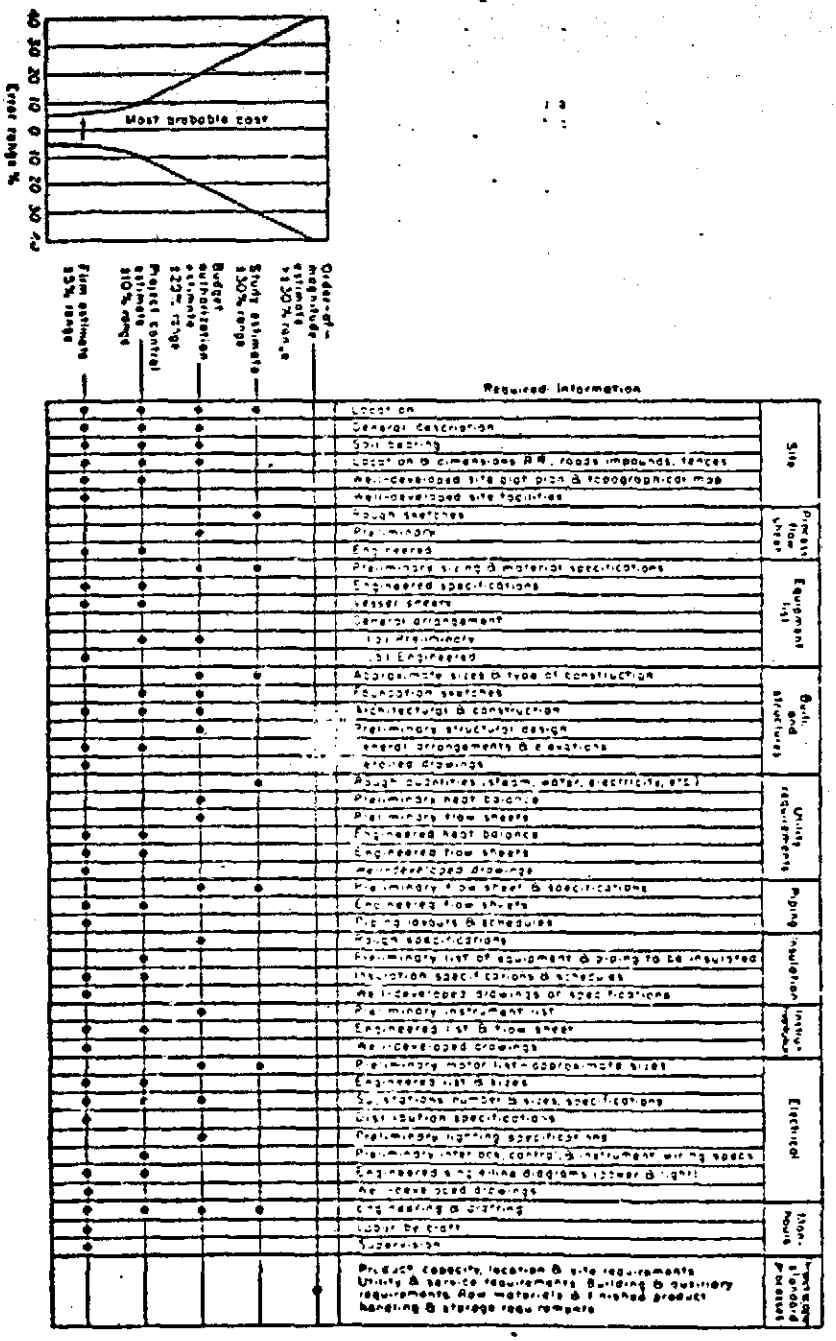

Figure B-1. Estimating Information Guide

COST INDEXES (Peters and Timmerhaus, 1968)

Most cost data which are available for immediate use in a preliminary or predesign estimate are based on conditions at some time in the past. Because prices may change considerably with time, due to changes in economic conditions, some method must be used for converting costs applicable at a past date to equivalent costs that are essentially correct at the present time. This can be done by the use of cost indexes.

A cost index is merely a number for a given year showing the cost at that time relative to a certain base year. If the cost at some time in the past is known, the equivalent cost at the present time can be determined by multiplying the original cost by the ratio of the present index value to the index value applicable when the original cost was obtained.

$$\text{Present cost} = \text{original cost} \times \frac{\text{index value at present time}}{\text{index value at time original cost was obtained}}$$

Cost indexes can be used to give a general estimate, but no index can take into account all factors, such as special technological advancements or local conditions. The common indexes permit fairly accurate estimates if the time period involved is less than 10 years.

Many different types of cost indexes are published regularly.

Engineering News-Record Construction Cost Index

Relative construction costs at various dates can be estimated by use of the Engineering News-Record construction index. This index shows the variation in labor rates and materials costs for industrial construction. It employs a composite cost for 2,500 lb of structural steel, 1,088 fbm of lumber, 6 bbl of cement, and 200 hr of common labor. The index is usually reported on one of three bases: an index value of 100 in 1913, 100 in 1926, or 100 in 1949.

Marshall and Swift (Formerly Marshall and Stevens) Equipment-Cost Indexes

The Marshall and Stevens equipment indexes are divided into two categories. The all-industry equipment index is simply the arithmetic average of the individual indexes for 47 different types of industrial, commercial, and housing equipment. The process-industry equipment index is a weighted average of eight of these, with the weighting based on the total product value of the various process industries. The percentages used for the weighting in a typical year are as follows: cement, 2; chemicals, 48; clay products, 2; glass, 3; paint, 5; paper, 10; petroleum, 22; and rubber, 8.

The Marshall and Stevens indexes are based on an index value of 100 for the year 1926. These indexes take into consideration the cost of machinery and major equipment plus costs for installation, fixtures, tools, office furniture and other minor equipment.

Chemical Engineering Plant Construction Cost Index

Construction costs for chemical plants form the basis of the Chemical Engineering plant construction cost index. The four major components of this index are weighted in the following manner: equipment, machinery, and supports, 61; erection and installation labor, 22; buildings, materials, and labor 7; and engineering and supervision manpower, 10. The major component, equipment, is further subdivided and weighced as follows: fabricated equipment, 37; process machinery, 14; pipe, valves, and fittings, 20; process instruments and controls, 7; pumps and compressors, 7; eletrical equipment ard materials, 5; and structural supports, insulation, and paint, 10. All index components are based on 1957 to 1959 = 100.

SIX-TENTHS FACTOR (Perry and Chilton, 1973)

Cost estimates in this report are given for processes that require scaling up from a given capacity to a larger capacity (e.g., 100 gpm to 300 gpm and 600 gpm). Equipment size and costs were shown to correlate fairly well by the logarithmic relationship known as the "six-tenths factor." The simple form of this method is:

$$C_n = r^{0.6} C$$

where C_n is the new plant cost, C is the previous plant cost, and r is the ratio of the new capacity to the old capacity.

This method is the best available for estimating the cost of the systems in this report since each system involves multiple pieces of equipment, piping, instrumentation, etc. The exponent actually ranges from

0.45 to 1.15 for different pieces of equipment, but in complex systems, such as the ones described in this report, estimating the new capacity cost for each piece of equipment is beyond the scope of this study.

Therefore, when scaling the costs up, for example, from a 100 gpm plant size to other plant sizes, the exponent 0.6 is used as an approximation of the scale-up factor for the entire system. In each case, some error may be involved using this method, but no other method is available for this study.

ONE-FOURTH FACTOR (Peters and Timmerhaus, 1968)

The "one-fourth factor" uses the same principle as the "six-tenths factor" with the exception that the exponent 0.25 is used instead of 0.6. This factor is used to scale up labor requirements from one plant size to a larger plant size, and takes into account the fact that larger plant sizes require less than proportional labor forces due to economies of scale.

PAYROLL CHARGES

These costs are the result of the many fringe benefits employees receive in addition to their salaries. Recent emphasis on these benefits in labor contracts make this cost substantial and it is steadily increasing with time. The sum of fringe benefits may add between 15 and 40% to the wage rate of employees (Perry and Chilton, 1973), and the percentage varies widely from company to company. In this report, payroll charges (fringe benefits) are estimated to be 30% of the wages paid to both labor and supervision.

OPERATING SUPPLIES

Operating supplies are items such as lubricating oil, instrument charts, etc., that are neither raw nor repair materials. The cost of these items is typically about 6% of operating labor (Jelen, 1970).

CONTROL LABORATORY COSTS

Depending on company practice and the type of project, operating costs may include several charges by other units of the company, e.g., charges by a control laboratory.

Laboratory costs may be estimated as a percentage of operating labor cost, in the range of 3 to 10%, but the complex situations as high as 20% (Jelen, 1970). Since treatment systems require more laboratory support than typical production processes, in this report the cost of these services is estimated to be 20% of operating labor costs.

MAINTENANCE AND REPAIRS (Peters and Timmerhaus, 1968)

A considerable amount of expense is necessary for maintenance and repairs if a plant is to be kept in efficient operating condition. These expenses include the cost for labor, materials, and supervision.

Annual costs for equipment maintenance and repairs may range from as low as 2% of the equipment cost if service demands are light to 20% for cases in which there are severe operating demands. The annual maintenance costs are given separately for each process in this report, and range from 5 to 15% of the capital equipment cost of the various processes.

DEPRECIATION

Depreciation is a periodic charge that distributes the installed capital investment cost over its expected service life. Instead of charging the cost of the equipment as an expense in the year of purchase, a portion of its cost is charged against revenues each year throughout its estimated useful life.

In this report the estimated useful life is determined by using the arithmetic average of the high and low lifetimes of equipment when a range is given, or 10 years if the useful life is unknown. In some cases, the useful life may be too high by U.S. Treasury Department Standard Guidelines (such as the 40-year life for the sedimentation process) which allows an 11 year depreciation for chemical plant equipment (Perry and Chilton, 1973). However, using 11 years for all equipment would either understate or overstate the real cost in most circumstances. When the useful life is unknown, 10 years is used to conform to the guidelines of the federal government.

A zero salvage value is assumed in all depreciation estimates and straight-line depreciation is used.

CAPITAL COST

Regardless of whether the capital investment is to be obtained from company funds or made available by bankers, it is logical that the invested capital earn a fair interest. If the company funds are not used

for the new unit, then they could be invested to bear a reasonable interest. If the capital is raised by issuing bonds or by borrowing from another corporation, interest would be paid the investor. It should be pointed out that in order to offer a company the incentive to invest its money in a new plant, it should be able to realize as large an interest rate as it could earn by making other investments. Since the risk is somewhat higher than certain conservative investments, the interest rate should be higher than that offered by these securities. Excessive interest rates are not realistic in view of today's regulatory laws. Normally, an interest rate of from 6 to 8% on the unpaid principal is considered satisfactory.

In computing interest, it is necessary to remember that the amount of interest will decrease each year since the unpaid balance is reduced by the depreciation allowed the previous year. An interest rate of 10% would average approximately 6.3% of the total principal each year if the principal is repaid in 10 annual installments. It is customary to express the interest as a uniform fixed cost item each year.

An interest rate of 10% is used in these estimates based on the cost literature (Chemical Engineering, 1975).

In reality, the interest will decline each year and, therefore, the payment on the principal will increase if uniform principal plus interest payments are made. Uniform payments for n periods required to pay the original sum P can be computed from the following equation (Petroleum Refiner, 1957).

$$R = P\frac{i(1 + i)^n}{(1 + i)^n - 1}$$

where P = original sum

R = uniform periodic payment

n = number of payments

i = interest rate as fraction per period

The expression $(1 - i)^n$ is the compound interest expression found in table form in many handbooks (Lange, Handbook of Chemistry). Value of $i(1 + i)^n/(1 + i)^n - 1$ for various values of n and i are listed below (Petroleum Refiner, 1957).

Values of $\frac{i(1 + i)^n}{(1 + i)^n - 1}$

n	2%	4%	6%	8%	10%
1	1.020	1.040	1.060	1.080	1.100
5	0.212	0.225	0.237	0.250	0.264
10	0.111	0.123	0.136	0.149	0.163

If the original investment was $1,000,000 and the loan was at 10% interest for 10 years, the uniform payment would be

$$R = (1{,}000{,}000)\frac{0.1(1 + 0.1)^{10}}{(1 + 0.1)^{10} - 1}$$

$$R = 163{,}000$$

In 10 years the total payment would be $1,630,000. Thus, the total interest is $630,000 and the average interest rate would be

$$\frac{630{,}000}{10(1{,}000{,}000)} = 6.3\%/\text{year}$$

PLANT OVERHEAD

Plant overhead is a charge to the costs of the manufacturing facility which are not chargeable to any particular operation and are normally charged on an allotted basis. Overhead includes such cost items as plant supervision, plant guards, janitors, cafeterias, administrative offices, accounting, purchasing, etc. Overhead costs will vary from company to company and are usually calculated as a percentage of direct labor cost or a percentage of installed capital investment for the entire facility, and allocated to each operation based on its labor or investment cost.

Plant overhead can range from 40 to 60% of direct labor costs or 15 to 30% of direct costs (Jelen, 1970). We estimate that plant overhead is 20% of direct costs in this report.

CONTINGENCY FOR CAPITAL INVESTMENT (Fowler, 1975)

The selection of a contingency figure for an estimate is a matter of the judgment of the estimator. This judgment must consider several factors, such as:

(1) Data basis--laboratory, pilot or plant

(2) Allowance for inflationary trends

(3) Knowledge of construction costs at plant location

Under favorable conditions, the contingency factor may be as low as 10%. However, lacking actual plant cost and considering present inflationary trends, a contingency figure of 30% would be justified.

In the past, cost indexes have been a reliable method of estimating cost based upon plant costs in earlier years. The plant indexes are more reliable when used on plant cost rather than pilot plant costs. It is much more difficult to use them successfully when equipment is pilot plant size or when a small amount of equipment is used. The use of the indexes in the last 2 years has not been as accurate as in the past and can result in too low a plant estimate. Uncertainty increases if cost indexes are used to update plant estimates rather than actual costs.

Unless the estimator has made the original estimate or knows what the plant costs include, a large amount of uncertainty exists when projecting plant costs to other plant capacities and times. It is necessary to know whether a plant investment includes the cost of utilities, such as a steam boiler or cooling tower, or whether steam and utilities are available at the battery limits of the unit in any amount required. It is also important to know whether the plant investment includes the cost of the land and site preparation. Only if these factors are known can the contingency factor be kept to a reasonable figure of 30% or lower.

REFERENCES

1. Chemical Engineering, p. 89, July 21, 1975.

2. Fowler, F. C., Chemical Engineering Consultant to Midwest Research Institute and President of Research Associates, Kansas City, Missouri, Personal Communication to C. E. Mumma, October 15, 1975.

3. Jelen, F. C., Cost and Optimization Engineering, McGraw-Hill Book Company, New York (1970).

4. Perry, R. H., and C. H. Chilton, Chemical Engineers Handbook, 5th Ed., McGraw-Hill Book Company, New York (1973).

5. Peters, M. S., and K. D. Timmerhaus, Plant Design and Economics for Chemical Engineers, McGraw-Hill Book Company, 2nd Ed. (1968).

6. Petroleum Refiner, Process Design Primer, September 1957.

END

DATE

FILMED

8-11-76

NTIS

MISSISSIPPI DEPARTMENT OF NATURAL RESOURCES
BUREAU OF POLLUTION CONTROL

HEARING BEFORE THE COMMISSION ON NATURAL RESOURCES
IN RE:

CEDAR CHEMICAL CORPORATION

Held in the offices of the Department of Natural Resources
2380 Highway 80 West, Jackson, Mississippi
Tuesday, September 16, 1986, beginning at 9:00 a.m.

APPEARANCES:

COL. CHARLIE BLALOCK - Hearing Officer
Executive Director
Department of Natural Resources

ALVA N. TEMPLE - Commission Chairman
ROBERT C. TRAVIS
THOMAS L. GOLDMAN
EARL F. BOYD
MARSHALL WATKINS

COMMISSION ON NATURAL RESOURCES

JOHN R. McNEAL, JR., ESQUIRE
Special Assistant
Office of the Attorney General

REPRESENTING THE COMMISSION

GEORGE L. WILLIAMSON, ESQUIRE
Special Assistant
Office of the Attorney General

REPRESENTING THE BUREAU OF POLLUTION CONTROL

ROBERT DAVID KAUFMAN, ESQUIRE
and
WILLIAM L. SMITH, ESQUIRE
Brunini, Grantham, Grower & Hewes
Post Office Drawer 119
Jackson, Mississippi 39205

and

Court Reporters Supply House Style # 4-S

ALLEN T. MALONE, ESQUIRE
Apperson, Crump, Duzane & Maxwell
100 North Main Building
Suite 2610
Memphis, Tennessee 38103

REPRESENTING CEDAR CHEMICAL CORPORATION

REPORTED BY: Kay E. Miles
Court Reporters, Ltd.
2318 Sagecrest Avenue
Jackson, Mississippi 39204-5726
(601)373-8859

Court Reporters Supply House Style # 4-S

CONTENTS OF TESTIMONY

Style and Appearances..... 1

Opening Statements..... 2

Testimony of GARY DIETRICH:

Direct Examination by Mr. Kaufman..... 15

Examination by Commissioner Goldman..... 25

Testimony of JAMES D. (SONNY) KEEN:

Direct Examination by Mr. Kaufman..... 27

Cross Examination by Mr. Williamson..... 50

Redirect Examination by Mr. Kaufman..... 77

Recross Examination by Mr. Williamson..... 78

Examination by Commissioner Temple..... 78

Examination by Commissioner Goldman..... 80

Testimony of GARY DIETRICH (Recalled):

Redirect Examination by Mr. Kaufman..... 81

Cross Examination by Mr. Williamson..... 93

Testimony of FRED AHLERS:

Direct Examination by Mr. Smith..... 119

Cross Examination by Mr. Williamson..... 125

CEDAR CHEMICAL RESTS..... 130

(Continued to next page)

Court Reporters Supply House Style # 4-S

CONTENTS - CONTINUED

Testimony of DAVID LEE:

Direct Examination by Mr. Williamson..... 131

Cross Examination by Mr. Smith..... 137

Redirect Examination by Mr. Williamson..... 142

Recross Examination by Mr. Smith..... 144

Further Redirect Examination by Mr. Williamson..... 145

Further Recross Examination by Mr. Smith..... 146

Testimony of JERRY CAIN:

Direct Examination by Mr. Williamson..... 147

Cross Examination by Mr. Smith..... 157

Redirect Examination by Mr. Williamson..... 164

Testimony of JACK McCORD:

Direct Examination by Mr. Williamson..... 171

Cross Examination by Mr. Smith..... 175

Testimony of CHUCK ESTES:

Direct Examination by Mr. Williamson..... 177

Cross Examination by Mr. Smith..... 199

Redirect Examination by Mr. Williamson..... 232

Recross Examination by Mr. Smith..... 243

Court Reporters Supply House Style # 4-S

CONTENTS - CONTINUED

Testimony of BEVERLY SPAGG:

Direct Examination by Mr. Williamson..... 244

Cross Examination by Mr. Smith..... 247

Redirect Examination by Mr. Williamson..... 253

Recross Examination by Mr. Smith..... 254

Further Redirect Examination by Mr. Williamson..... 255

Further Recross Examination by Mr. Smith..... 257

Further Redirect Examination by Mr. Williamson..... 258

STATE RESTS..... 259

Rebuttal Testimony of GARY DIETRICH:

Direct Examination by Mr. Kaufman..... 259

Cross Examination by Mr. Williamson..... 262

Closing Remarks by Commissioner Travis..... 265

Certificate of Court Reporter..... 270

Court Reporters Supply House Style # 4-S

EXHIBITS

Cedar Exhibit No. 1 - Issues Involved in Determination of Whether De Minimis Exception Applies

For Identification.....Page 24
Entered.....Page 69

Cedar Exhibit No. 2 - Chemical Products Manufactured at Vicksburg Chemical

Entered.....Page 36

Cedar Exhibit No. 3 - Photograph

Entered.....Page 37
(Retained separate from transcript)

Cedar Exhibit No. 4 - Flow Progress Chart

Entered.....Page 50

Cedar Exhibit No. 5 - Sample Collection Diagram

For Identification.....Page 83
Entered.....Page 92

Cedar Exhibit No. 6 - Quantification of De Minimis Losses

For Identification.....Page 83
Entered.....Page 92

Cedar Exhibit No. 7 - Vertac Chemical Corporation Status Report

For Identification.....Page 159
Entered.....Page 161

Cedar Exhibit No. 8 - Letter dated September 2, 1986, to Mr. Charles Chisolm, Bureau of Pollution Control, from Mr. Kaufman

Entered.....Page 194

Court Reporters Supply House Style # 4-S

EXHIBITS - CONTINUED

Cedar Exhibit No. 9 - Letter dated December 20, 1984, to Mr. Chuck Estes, Bureau of Pollution Control, from Mr. Dick Karkkainen

Entered.....Page 203

Cedar Exhibit No. 10 - Letter dated February 21, 1985, to Mr. Chuck Estes, Bureau of Pollution Control, from Mr. Dick Karkkainen

Entered.....Page 203

Cedar Exhibit No. 11 - PA/SI Form

Entered.....Page 228

State Exhibit No. 1 - Inspection Report of Mr. David Lee

For Identification.....Page 68
Entered.....Page 69

State Exhibit No. 2 - Excerpt from Federal Register dated November 17, 1981

For Identification.....Page 108
Entered.....Page 109

State Exhibit No. 3 - Vicksburg Chemical Company Effluent Treatment Process

Entered.....Page 126

State Exhibit No. 4 - Letter dated August 10, 1981, to Mr. Maraman, Vertac Chemical Corp., from Mr. David Lee

For Identification.....Page 135
Entered.....Page 135

Court Reporters Supply House Style # 4-S

EXHIBITS - CONTINUED

State Exhibit No. 5 - Copy of aerial photograph

For Identification.....Page 145
Entered.....Page 145

State Exhibit No. 6 - Letter dated March 9, 1983, to Mr. Steve Spengler, Bureau of Pollution Control, from Mr. Dick Karkkainen

For Identification.....Page 148
Entered.....Page 152

State Exhibit No. 7 - Schematic of Waste Treatment Facility

For Identification.....Page 148
Entered.....Page 152

State Exhibit No. 8 - Letter dated July 11, 1979, to Mr. Bill Barnett, Bureau of Pollution Control, from Mr. R. T. Marentis

For Identification.....Page 155
Entered.....Page 155

State Exhibit No. 9 - Sample Results from Vicksburg Chemical

For Identification.....Page 174
Entered.....Page 174

State Exhibit No. 10 - Part A and Part B Application of Vertac Chemical

Entered.....Page 179
(Retained separate from transcript)

State Exhibit No. 11 - Hazardous Waste Manifest

For Identification.....Page 193
Entered.....Page 196

Court Reporters Supply House Style # 4-S

EXHIBITS - CONTINUED

State Exhibit No. 12 - EPA Site Inspection Report

For Identification.....Page 193
Entered.....Page 196

State Exhibit No. 13 thru 18 - Photographs

Entered.....Page 244

Court Reporters Supply House Style # 4-S

[BEGINNING STATEMENT NOT ON THE RECORD.]

MR. SMITH: In our very candid and cordial conversations with the staff it became obvious that at least some members of the staff did not agree with us and the position that we take in this hearing today. I am told however they are anxious to hear our presentation, and I hope in making that presentation that we can persuade not just those members of the staff but you as well.

While the issue we face is very narrow, some fundamental background is necessary to understand where we are and what we're asking you to decide. In 1976 Congress passed the so-called Resource Conservation and Recovery Act, and John Harper and Charles and others have kind of taught me all these acronyms and you're going to hear the term today "RCRA." That's all that is, is that '76 Act as it's subsequently been amended.

RCRA was designed to regulate hazardous waste: generators, treaters, storers, disposers or transporters. You could be as a RCRA facility in one of those classifications, which subjected you to one set of regulations, or more than one, which subjected you to more than one set of regulations.

In 1980 EPA promulgated its list of hazardous waste, and in defining hazardous waste the EPA decided to define it in one of three ways. It first listed certain

characteristics which if these wastes demonstrated they were considered to be hazardous. It then took certain substances and listed them specifically and said these substances are hazardous wastes. And then in 1980 the EPA took a very broad third definition and adopted what has been called the mixture rule, because it said we're going to consider as a hazardous waste any product that is a listed hazardous waste and is subsequently mixed with a nonhazardous waste, and hence we came up with the mixture rule.

In adopting the mixture rule the EPA said this: We're adopting this rule "to prevent the generator of hazardous waste from evading regulation as a disposer of hazardous waste by purposefully commingling a hazardous waste with a nonhazardous waste." And that was the concept and thought process EPA had when they adopted the mixture rule.

Needless to say, this definition in the manufacturing and industrial community was extremely broad, and the manufacturing and chemical industry had a very violent reaction to it. A lot of political thought went into this; a lot of public debate. The Chemical Manufacturers Association of American and other trade associations presented EPA with documentation that fundamentally that was an overly broad definition, and 18 months later EPA agreed, and they carved out an exception to the mixture rule.

And while the complaints about the broad defini-

tion were very varied, one of the principal complaints was: that's a very unfair definition of hazardous waste when you're going to take that definition and subject the company to very, very strenuous regulations if you consider that oftentimes a hazardous waste in relatively small amounts in the normal course of manufacturing is going to become mixed with very large volumes of nonhazardous waste. And through a large facility's drainage system it's likely to end up mixed with this nonhazardous waste.

And so, EPA adopted this de minimis exception to the mixture rule, and the import of that is just what EPA says: Today--this is from the EPA promulgation of this regulation. Today's amendment--talking about the de minimis exception--EPA is excluding from the mixture rule wastewater mixtures that are hazardous waste solely because they contain discarded commercial chemical products that are a listed hazardous waste arising from de minimis losses in the normal handling of these materials, either as raw products used in the manufacturing process or as intermediate chemical products used in or produced by the manufacturing process. Small amounts of hazardous waste which are being produced by or used as a raw product in a manufacturing process are often unavoidably lost in normal operations. For example, small amounts of raw material are lost in various unloading and unloading operations or material transfer

operations: small drippage when transfer hoses are disconnected. Additionally, small amounts of manufactured products are lost in material handling, processing, packaging or storage activities. For example, losses from the packing of pumps being used to transfer products, unanticipated spills, relief valve discharges, rinsates from drained or otherwise emptied containers. These are all normal losses which are typically minimized because the product has a value and their loss is an economic penalty to the company.

This hazardous waste that's involved in this case is a product that we make in Vicksburg. It's a herbicide, a pre-emergent herbicide. All my friends kid me about graduating from Mississippi State; but that's one of the things we learned up there: that's a preamergent herbicide that kills basically broadleaf weeds. Farmers use it. We've been manufacturing it in Vicksburg since 1973. But it has a value. It costs money. It costs money for us to make it, and we've got a strong incentive not to lose any of it, but sometimes unavoidably we're going to lose some of it, and that's what these regs. are talking about.

The reg. itself basically tracks that language, and what they say is you don't have this regulatory, strict regulatory environment, as a disposer if you can show that the resultant mixture of the hazardous and nonhazardous waste consists of wastewater, the discharge of which is

subject to regulation under the Clean Water Act--a totally separate regulatory environment--and a discarded commercial chemical product arising from de minimis losses of these materials from manufacturing operations in which these materials are used as raw material or produced in the manufacturing process. For purposes of this subparagraph de minimis losses include those from normal material handling operations: spills from the unloading or transfer of materials from bins or other containers, leaks from pipes, valves or other devices used to transfer materials, minor leaks of process equipment, storage tanks or containers, leaks from well maintained pump packings and seals, sample purgings, relief device discharges, discharges from safety showers and rinsing and cleaning of personal safety equipment.

Cedar Chemical generates a hazardous waste. Regardless of what you decide today Cedar Chemical will remain regulated as a generator of hazardous waste. The issue you face today however is whether in addition to that whole set of regulations this company is going to be subjected to $2.5 to $5 million worth of expense and also being regulated as a disposer of hazardous waste.

Cedar Chemical is located on a plant site of approximately 10 to 20 acres. It was built approximately 30 years ago. It's got an underground drainage system for storm water runoff, some of which is 25 feet in the ground.

We do lose small drops in our manufacturing operation of this DNBP, this hazardous waste, and in some situations the DNBP works itself into the storm drainage system and is mixed with massive volumes of primarily rainwater runoff--a nonhazardous waste in effect.

It then goes into a surface impoundment, a three-cell surface impoundment, a pond if you will--three ponds. At that point we are permitted from this agency to treat this wastewater surface impoundment and to discharge at certain levels into the Mississippi River. That permit, that discharge, is totally unaffected by this hearing. The sole and singular question that exists today is whether or not the DNBP, the hazardous waste, that exists in that surface impoundment got there as a result of de minimis losses in the manufacturing process at that plant.

When I got into this particular case five or six weeks ago I looked at these regs. and I talked to the production people at this plant and became convinced that de minimis was clearly applicable. I talked to Charles and it became obvious that he wasn't so convinced. And so I did a lot more investigating. And the first witness I'm going to call for you today is one of the people we brought in, in connection with it--is in fact the man who wrote the de minimis exception for the EPA. He was the Director of the Office, and Deputy Director of the Office of Solid Waste,

for the EPA in Washington. He is now in private practice. And we'll put him on the stand to basically outline what we've got to show.

We'll then put operation people on the stand to describe how our operation works and how the losses of the DMBP got to the pond. We'll then bring him back to the stand for his conclusions and opinions on whether or not de minimis is applicable.

Three very important points very quickly: As I said initially, this is important to this company. This company is a old and large employer in Warren County, and in so being in that role it's got to make normal business decisions like anybody else. And all we're asking you to do before we're forced to make the expenditure that we're talking about is to give us a full, fair and complete hearing and not accept some strained interpretation of the regulations, because we think these regulations speak for themselves and we think they apply to us.

Two other points: This facility filed what's known in the regulated community as some protectionist filings. When RCRA first came out the industrial community in this country were all very cautious. RCRA carries criminal sanctions for the officers of the company, it carries very severe civil sanctions; and so many companies not being certain whether they were a RCRA facility or not filed the

normal applications in the process for being permitted as a RCRA facility--disposal facility. We did too. But when we did it we reserved on three separate occasions issues that we raise here today.

At some point in this regulatory process we're going through this, we're going to try to meet these deadlines that are in the Act, but we don't think the surface impoundment is a RCRA regulated facility, and we're going to raise that issue. So please don't be confused by the fact that we went through the permitting process. Many people in the country did that and subsequently decided that RCRA was not applicable.

And last, and a very important point I think, is regardless of your decision today keep in mind this facility will remain regulated. It will remain regulated under RCRA as a generator. It will remain regulated under the so-called imminent hazard standards of RCRA of 7003 where if it poses some serious threat to the health, imminent threat to the health, it's regulated under that, and this commission and EPA has the right to come back in and use it; and it will also remain regulated under the Clean Water Act.

So we don't come here today seeking to remove the shackles of regulation across the board. We come on one narration: Should we be regulated as a RCRA disposal facility or are we out from underneath that very stringent regulation

because of the de minimis exception? We think the evidence will show that we're right in our contentions.

HEARING OFFICER: We got part of that on the record, except for the first few minutes. Do you need to elaborate on that?

MR. WILLIAMSON: Yes.

HEARING OFFICER: All right. Let me do one thing first and then we'll go on. We need to establish in the record what this hearing is about officially.

This is a hearing of the Commission pursuant to Section 4, Paragraph 7, of the Commission Order 1046-86 which was issued following the Commission's August 1986 hearing in the matter of Cedar Chemical Corporation, successor to Vertac Chemical Corporation.

All right. Before we go on and before George makes his statement and then we'll go on to this, the way we'll proceed, Bill, is after George makes his statement you will go ahead and present your case. This is at your request. George will present his. I'm going to ask the court reporter in just a moment to swear all the witnesses, and obviously each of you will have the right to cross-examine the other witnesses, and the Commission may ask questions of the witnesses after you've finished with them, and after we've finished, both sides will have a closing statement, and then the Commission will either decide the matter

today or take it under advisement, as it chooses.

At this time let me ask for both the State and for Cedar if you would have all your witnesses rise, and I'm going to ask the court reporter to swear them.

[ALL PERSONS TO TESTIFY ARE SWORN BY THE COURT REPORTER.]

HEARING OFFICER: Okay, George, go ahead and make your statement.

MR. WILLIAMSON: Members of the Commission, one thing I want to get clear before we go further is the name of the company. You're going to probably see evidence that may have three different names on it. It may be Vertac or Cedar or it could be Vicksburg Chemical. It's all a plant that's been over there in Vicksburg for many years and there's been a lot of corporate merges and so forth. So those are the three names that you may run across in this hearing; but they're all the same company--for the purposes of this hearing they're all the same company.

I think probably the most important thing for the Commission to understand about this hearing is the fact that this is not a situation where the Bureau of Pollution Control has charged somebody with something, where we are trying to prove this case. In this hearing--and that's why Mr. Smith wanted to go first--the burden of proof is on him. He's got to convince y'all that this exception that he's

seeking applies to them. I don't have to prove the contrary. And that's stated in the EPA regulations themselves which will at the appropriate time be put into evidence.

He talks about the de minimis exception, and that's exactly what it is, gentlemen. It's an exception. It is not the general rule that any company can come in and do this. What de minimis was put in there for is to control unavoidable--unavoidable. That's another key word--unavoidable process of leaks. If material was haphazardly handled or was negligently handled and left in a storage area someplace unattended or leaking within their knowledge that's not an unavoidable loss and that's not what the de minimis exception is meant to apply to. And today you're going to hear evidence to that effect. I'm going to present evidence that there were leaks out there which were known to this company for years.

I think another interesting point that we need to focus in on is that in 1980, what Mr. Smith referred to as a protectionist regulatory requirement they call it, Part A of the Permit Application was submitted, which is a few pages thick. That was in November of 1980. So that brought them under our regulatory scheme. Six years ago.

Do y'all know when we first heard of this de minimis exception that they're asking for? Just in the last few weeks, in the last few weeks after they found out that they

would have to incur substantial costs to close the treatment impoundment or this lagoon which you will become more familiar with as we go along. That's six years ago they submitted themselves to the regulatory process.

Then in June of 1985 they submitted the Part B Application, which is this document, and it certainly stretches my imagination to understand why a company--which obviously with their resources and with their expert testimony and consultants from EPA and around the country, why would a company with those resources submit themselves to the hazardous waste regulatory scheme? Why would they spend the money necessary to develop all of these maps and all of these reports if they didn't know then just as they know now that they do not in fact meet the de minimis exception?

He talks about that the purpose of the hazardous waste laws was to regulate hazardous waste in this country. That's obviously an abstract statement that's perfectly true. What that ties back into is that any responsible party that's seeking to abide by the laws of this country are going to submit themselves to those laws and try to abide by them. He says that this facility will remain under our regulation. That's true in a sense. But the impoundment which contains the greater amount of material over there that is hazardous to the environment would not be because that would be left out of the generator, the scheme of

things.

So what they're seeking to do is through a loophole to avoid their responsibilities under the RCRA law, and what they're seeking to do is to avoid having to account to our society for the years and years, or "the past sins" as we've heard in the last few weeks, that's in that impoundment out there which they may have to close. And also, as a little axillary matter which most corporations are interested in, there is a substantial amount of money involved in closing that.

Something that we will harp on later, and we will mention it right now again, is that de minimis losses are those associated with the process stream and not those associated with, for example, surface runoff that can get into the impoundment. I'm going to say that again, because that is going to be probably a very important factor in this hearing. The de minimis exception only applies to process losses, and it doesn't apply to materials stored haphazardly that get into that impoundment through surface runoff. And you're going to hear both State witnesses that work on our staff here and at least one witness from EPA in Atlanta that will tell you that is the way EPA interprets de minimis exception today.

The last thing I want to tell you is I want to remind you one more time that the burden of this hearing is

different than our normal hearing. It's not on the State in this case. The burden is on them to prove that the exception applies to them.

That's all. Thank you.

MR. SMITH: At this time we call Mr. Gary Dietrich to the stand.

GARY DIETRICH,

having first been duly sworn by the court reporter, was examined and testified on his oath as follows, to-wit:

MR. KAUFMAN: May it please the Commission, I'm David Kaufman. I'm a partner of Bill Smith's in the firm here in Jackson.

DIRECT EXAMINATION

BY MR. KAUFMAN:

Q. Mr. Dietrich, would you please state your full name and current occupation for the record.

A. My name is Gary Dietrich, Gary Neil Dietrich. I'm currently senior vice president for ICF Technology, a consulting firm in Washington, D. C.

Q. Would you please tell the Commission what ICF Technology does.

A. ICF Technology is a major consulting firm that provides a number of services, many of which are in the environmental area; services to EPA, to other federal and state agencies, and to the private sector on matters that range

from some of the technical work to support the development of regulations, the remedial investigations and feasibility studies with regard to site clean-up activities, helping clients prepare Part B and other environmental applications, performing health studies and risk studies for both regulatory agencies and the private sector. Those are principally the principal activities that the firm is involved in.

Q. Thank you. Would you give the Commission the benefit of your educational background and your work experience prior to going to ICF.

A. I received a Bachelor of Science Degree in engineering from the California Institute of Technology in 1957. I subsequently did some part time and full time graduate work at Portland State University, Oregon State University, and at Cornell University.

I joined the Public Health Service in 1957 and spent the subsequent 23 years, except 2 or 3 years interruption, with the Public Health Service; was then--the program was transferred into the Federal Water Quality Administration, and then finally the program was transferred into EPA. So it's basically 23 years with the same program, or the environmental program was switched from one agency to the other.

In that tenure I functioned in a number of areas: water quality studies programs, enforcement programs, field

investigation of pollution programs, oil spill activities; helped develop and organize the Office of Toxic Substances; spent a number of years as the principal manager of program planning and budgeting for EPA. The last three years of that tenure I was Deputy Director for two years and Director for one year of the Office of Solid Waste, and in that capacity I was responsible for managing the development of hazardous waste regulations and amendments to those regulations that were developed before I left the agency. I left the agency in May of 1982.

Q. What is your understanding is the purpose of this proceeding?

A. I believe the purpose was as stated by Mr. Smith: is to demonstrate that the ponds at Cedar Chemical by operation of the mixture rule do not contain hazardous waste and therefore are not regulated under the hazardous waste regulations.

Q. What have you done to prepare yourself to give testimony on that issue today?

A. I spent one day last week with officials of the company--the plant manager, the operations manager, and the environmental engineer--learning the facts of this case, basically querying them on all of the facts that must been addressed. I asked for some additional studies to be made. I have reviewed the results of those studies. I did that

yesterday morning and over the weekend. I also spent some additional time yesterday morning further inquiring into facts of the case. I have made a visit to the plant and have personally walked through the part of the plant where DNBP is manufactured, stored, packaged and where returned products are returned. I also looked at the impoundment.

Q. Are you familiar with the mixture rule and the de minimis exception to it?

A. Yes, I am. As Deputy Director of the Office of Solid Waste I was principally involved, very much involved, in the developing of the original definition of hazardous waste and the mixture rule as part of the definition, that rule being promulgated in May of 1980. As Mr. Smith indicated, after the promulgation of that rule, the rule was litigated. Several trade associations and several companies, chemical companies, petition for judicial review with respect to the mixture rule as being overreaching. I managed the negotiation that took place as a result of that litigation. It did not go to court, it was negotiated out of court, and I managed the development of the amendments to the mixture rule, one of which is the amendment that covers de minimis discharges, or de minimis losses, which will be discussed today. So I'm very familiar with the underlying rule and the amendments that we'll be discussing today.

Q. Have you testified as an expert witness before

other agencies and in courts?

A. Yes. I've testified in adjudicatory hearings in South Carolina with regard to the transfer of a nuclear waste facility permit from one company to another. I've served as an expert witness in the hearing in the State of Illinois--in two hearings in the State of Illinois relative to the applicability of the hazardous waste regulations to a particular facility. I've served as an expert witness in testifying before Congress, several committees of the Congress, that have been responsible for developing the RCRA statute and the amendments thereto.

MR. KAUFMAN: At this time we would tender Mr. Dietrich as an expert witness, an environmental engineer and scientist with special expertise regarding the intent and purpose, promulgation and applicability of the mixture rule and the de minimis exception.

MR. WILLIAMSON: No objection.

BY MR. KAUFMAN:

Q. Mr. Dietrich, can you outline the criteria that Cedar's pond must meet in order to qualify for exemption as a hazardous waste management facility?

A. Yes, I can.

Q. Have you prepared an exhibit which sets forth that criteria?

A. Yes. I believe there is an exhibit here.

[EXHIBIT PLACED ON EASEL.]

COMMISSIONER TRAVIS: Is this de minimis exception the one that is shown in Section 261.3(D) of the regulations?

THE WITNESS: Yes, sir. The full reference is 261.3(a)(2)(iv)(D). I stayed up all night to remember that.

MR. SMITH: It's some parts before that have to be read in connection with that subparagraph.

COMMISSIONER TRAVIS: You will hopefully furnish us with these?

MR. SMITH: I think you have them. I think that's what they're about to go through now.

THE WITNESS: Basically these criteria--do you want me to proceed?

BY MR. KAUFMAN:

Q. Yes. Would you tell me what your exhibit shows.

A. These are basically criteria that one finds in a little reading of the citation that I just gave you: 261.3(a)(2)(iv)(D). The demonstration that we must make pursuant to that--to this provision, are the following six criteria: We must show that the pond includes wastewater, the discharge of which is subject to Section 402 of the Clean Water Act.

Q. If I could interrupt you, as you go through each one would you explain why the drafters deem this to be a

relevant criteria.

A. Yes. Basically there is a provision in RCRA itself that directs the agency not to duplicate regulations under RCRA where the facility is regulated under the Clean Air Act or other further statutes. In this particular case the reasoning was that these impoundments that are subject to the Clean Water Act are regulated under that act and the application of RCRA may or may not be necessary. So that was the thinking behind that particular criteria.

I think we must show that the only hazardous waste going into the impoundment is a chemical product that is listed in 261.33, and as Mr. Smith has indicated, we hope to show that--we will show that the specific hazardous waste, the specific chemical product, is dinitrobutyl phenol, also called dinoseb, also been referred to as DNBP. I will probably use any one of those terms in my testimony.

Q. I'm sorry. I hate to interrupt you, but would you explain the thinking of why this was a relevant criteria.

A. I think I'm going to do that for the last six all at one time.

Q. All right, fine. Please continue.

A. It doesn't really make sense to break it up. We must show that the DNBP going to the pond is indeed reduced in the manufacturing and operations at the facility, or is used as a raw product or as an intermediate product. In

this case the material is used at--is a produced product at the plant. We must show that the DNBP going to the pond only derives from losses of that chemical from the manufacturing operation at the facility; that it does not derive from other causes.

No. 5: We must show that those losses derive from de minimis losses of that chemical.

And finally, we must show that the DNBP going to the pond is not derived from the deliberate discarding of that material or from major leaks or spills of that chemical. If we could make that showing, it is my belief that the mixture in that pond is not a hazardous waste and therefore the pond would not be subject to the RCRA regulation.

With regard to the rational behind the criteria two through six, I believe that Mr. Smith touched on those and stated it very, very well, it was EPA's belief that the---

MR. WILLIAMSON: I'm going to object to that opinion stated there. He can't testify as to what EPA's belief is. He can testify as to what his opinion is; but he can't testify as to what EPA's opinion is, because I'm going to have somebody here working with EPA right now that's going to say something quite different I'm sure.

HEARING OFFICER: He can testify as to what the opinion was at the time he was there.

MR. WILLIAMSON: I'm going to make my objection for the record.

THE WITNESS: When we first developed the mixture rule we recognized at the time it was overreaching, that it didn't have any de minimis cutoff. That was a concern in May 1980, but we were under a deadline to promulgate the regulation, under court-ordered deadline to promulgate the regulation, and we really didn't have time to deal with it at that time. As I've indicated, the provision was litigated and we negotiated with the litigants and we ultimately developed the exceptions or provisions that provided de minimis cutoff for the mixture rule.

In doing that we recognized that the mixture rule was overreaching if it caused a large volume of wastewater which was regulated under the Clean Water Act to become a hazardous waste but for only the addition of very, very small amounts of hazardous chemical. We didn't believe that the environmental regulations would be well served by adding another set of RCRA regulations on top of the wastewater regulations for that type of situation where the amount of hazardous waste in the wastewater impoundment was very, very small.

MR. WILLIAMSON: I'd like to propose a suggestion for opposing counsel. Has this been introduced in evidence?

MR. KAUFMAN: After he explained what it was I

thought it would be appropriate at that time to ask that it be received.

MR. WILLIAMSON: I thought he was further along in his testimony. I don't have any objection to having it introduced in evidence.

MR. KAUFMAN: We move its introduction as Cedar Chemical Corporation's Exhibit No. 1.

[Document entitled "Issues Involved in Determination of Whether De Minimis Exception Applies" entered into evidence as Cedar Exhibit No. 1, appended hereto.]

THE WITNESS: To conclude, the rationale for these criteria are to put a de minimis cutoff on the mixture rule.

MR. KAUFMAN: At this time what we would like to do is tender the witness for cross-examination on the testimony he's given or to any questions you might have and call Mr. King, who is the production manager at the plant, to fill in the facts necessary to make this evaluation, and then ask Mr. Dietrich to take the stand again to express an opinion whether or not in his view we fit the de minimis exception.

HEARING OFFICER: Okay. Do you have any cross-examination at this time, George?

MR. WILLIAMSON: I don't have any at this time, but for the record I'm expressly reserving the right to

cross-examine Mr. Dietrich when he is put back on the stand to finalize his direct examination.

HEARING OFFICER: Any questions by the Commission at this time?

COMMISSIONER GOLDMAN: Yes. I'd like to ask a few questions.

BY COMMISSIONER GOLDMAN:

Q. Have you checked the volume of DNBP that's going into the pond as a result of these de minimis leaks?

A. I have made an estimate, yes, sir, and I was going to present that later.

Q. I'd like to know it now.

MR. SMITH: If I could, it's a bit more complex. We'll be glad to go into it now if you want us to; but it's more than just citing a number. It's a highly complex sort of calculation that has to be made to extrapolate back out of the pond into the process area, which we are prepared to do, but we would prefer to do, with the Commission's approval, after we have gone on through and explained the operation, because I think it will be more meaningful then.

COMMISSIONER GOLDMAN: I think I have sense enough to understand it now.

MR. SMITH: Yes, sir.

THE WITNESS: I believe that there is somewhere between three and six and a half tons a day of DNBP going

into the impoundment.

BY COMMISSIONER GOLDMAN:

Q. Have you checked the contents of the pond?

A. We have done some sampling of the ponds last week, yes.

Q. And what is the amount of DNBP in the pond at the present time?

MR. KAUFMAN: We have an exhibit, if you'd like for us to pass that out.

COMMISSIONER GOLDMAN: I'm talking to the witness, counsel.

THE WITNESS: The DNBP in the sediments in the pond--can I use that exhibit? [Obtains document]

We found that the concentrations of DNBP in the sediments in the pond ranged from about 2 parts per million to 172 parts per million on a wet basis. We also measured the depth of sediment in the pond and estimated the volume of sediment in the pond. If I take that volume and multiply it by the concentration, I get an estimate of about 1300 pounds of DNBP has accumulated in the pond over the last 13 years.

BY COMMISSIONER GOLDMAN:

Q. Okay. Now do you think--is that or is that not an amount sufficient to be hazardous to health?

A. I don't think where it is now setting that it does

present a hazard to either health or the environment.

COMMISSIONER GOLDMAN: Okay.

HEARING OFFICER: Any further questions by the Commission? Okay. Proceed on, please.

[WITNESS EXCUSED]

MR. KAUFMAN: Cedar Chemical calls Mr. Sonny Keen.

JAMES D. (SONNY) KEEN,

having first been duly sworn by the court reporter, was examined and testified on his oath as follows, to-wit:

DIRECT EXAMINATION

BY MR. KAUFMAN:

Q. Mr. Keen, would you please state your name for the record.

A. James D. Keen.

Q. And you're employed by Cedar Chemical Corporation?

A. Correct.

Q. For how long have you been employed by Cedar or its predecessor organizations?

A. Twenty-five years.

Q. And you've worked at the Vicksburg facility for 25 years?

A. Since 1961.

Q. Okay. Would you tell the Commission about your employment history at the facility: what jobs you've held, what your responsibilities have been.

A. Okay. In 1961 I was employed by at that time Spencer Chemical Company. They were producing ammonia and nitric acid. I was hired in as a production operator at that time. In about 1965 I was promoted to what we call a shift relief. From there I was a shift supervisor. In '72 I was hired on with Vicksburg Chemical as a production supervisor. I worked as a production supervisor, production superintendent, two years as a maintenance superintendent, and to the present job I have now as the production manager.

Q. And when was the plant, or any of the facilities of the plant, originally built?

A. The ammonia plant was built in 1953 or '54. That's the south plant.

Q. Have you brought an enlarged photograph of the plant here with you today?

A. Yes, sir.

MR. KAUFMAN: If it would please the Commission, we'd like to place this on an easel. I think it would help in understanding his testimony.

[AERIAL PHOTOGRAPH PLACED ON EASEL]

MR. KAUFMAN: If it's permissible with the Commission, we'd like for Mr. Keen to point out where these facilities are, give you some idea of when they were constructed and what products are manufactured at these various facilities.

THE WITNESS: Okay. This is the so-called south plant. This is the old Spencer Plant that was owned by Spencer Chemical Company, Gulf Chemical Company and also Vicksburg or Vertac Chemical Company before Cedar. This is the plant that we manufacture ammonia and nitric acid. It was built around '53.

Over here is what we call the north plant. I think in '64, if I remember right, Amax or American Metals built a potassium nitrate plant and in this plant they manufactured potassium nitrate which is basically a fertilizer and chlorine prior to '72 when Vicksburg Chemical purchased the entire facility.

BY MR. KAUFMAN:

Q. You've heard statements in opening argument and some other testimony about the pond at the facility. Would you point out to the Commission where the pond is located.

A. Yes, sir. This is the pond for the south facility, and if you'll notice up here in the left-hand corner there's a smaller pond. This is for the north facility.

Q. We're not talking about the pond at the north facility are we?

A. No. This is the pond we're talking about down here.

Q. Okay. And some people have called them ponds. Actually, there are three cells to the ponds?

A. There's three cells. The water comes into the pond here and has what we call a finger dike that makes the water go down and come back this away into the pumps that you can barely see right here that ultimately pump the water from the holding pond through a carbon filtering system to the Mississippi River.

Q. In the foreground here there appears to be some ponds and treatment facilities. Does Cedar own those facilities?

A. No, sir. This facility is the Vicksburg sewage treatment facility.

Q. The City of Vicksburg?

A. The City of Vicksburg.

Q. Have you prepared an exhibit which shows the products which have been manufactured in the north and south plants, the dates the products were initially produced and when you ceased manufacturing some of those products?

A. Yes.

[DOCUMENT TENDERED TO EACH COMMISSIONER]

Q. Briefly explain what this exhibit shows.

A. It just shows that from 1953 to 1968 the--in the south works we produced nitric acid and ammonia. In 1973 when Vicksburg Chemical purchased the facility we put in a DNBP plant, or a dinoseb plant, a toxaphene plant, and a methyl parathion plant.

Q. And would you explain what those products are.

A. Okay. Dinoseb is a herbicide; toxaphene is a pesticide, and methyl parathion is a pesticide.

Q. And of those three products the only one you're manufacturing currently is the DNBP?

A. That's correct.

Q. Do you also produce blended products of DNBP?

A. Right. We make several blends of the dinitro. We make the technical grade dinitro, which is then used to formulate into different blends that goes for agricultural use. What we call the three-pound blend is three pounds of this active ingredient, and it's basically used in the soybean--and then we make a five pound that is basically used as a defoliant burn-off for potatoes, to kill the tops of potatoes and stuff like this.

Q. I note that at the north plant you manufacture nitrogen tetroxide. What is nitrogen tetroxide?

A. Nitrogen tetroxide is a product we make for the Government's space program. It's an oxidizer for the shuttle program.

Q. Do any other chemical manufacturing plants in the country provide the space program with that product?

A. No. We're under contract with the space program to supply that.

Q. Okay. We've pointed out the location of a pond

which consists of three cells, or we sometimes refer to it as three ponds. What is the current use of that pond?

A. The current use for the pond is for basically rain run-off or for--if we had a major spill we would have some way to contain it.

MR. WILLIAMSON: David, I apologize for interrupting. Has that thing been introduced into evidence? Are y'all going to introduce it into evidence?

MR. KAUFMAN: Well, the problem is in trying to reproduce that. We can try to get a photograph of that taken, enlarged and introduced into evidence. I was going to primarily use it just for the purposes of illustrating his testimony. I don't think there's any need to introduce a copy of that into the record.

MR. WILLIAMSON: Would you have any objection to my people--we never have seen that photograph to my knowledge. Do you have any objection to my people reviewing that photograph before you go further in your questions?

MR. KAUFMAN: I have no objection.

MR. WILLIAMSON: We just never have had a chance to look at it. It looks like it's such a beautiful photograph that---

THE WITNESS: Could I point out one thing to you, please, sir, on here?

MR. WILLIAMSON: You'd better ask your boss over

there.

BY MR. KAUFMAN:

Q. When was that photograph taken?

A. The photograph here was taken while we were running our old nitric acid plants. If you notice that--the stack off the old plant. That's no longer there. And the little cleared area right here is where the new nitric acid plant is. I just want to make that comment, you know, for you.

[OFF THE RECORD FOR COUNSEL AND POLLUTION CONTROL STAFF TO EXAMINE PHOTOGRAPH]

HEARING OFFICER: Okay. Let's proceed with the witness, please.

BY MR. KAUFMAN:

Q. Just to kind of recap where you were, you were telling us for what purposes this pond was used, and I believe you said to collect rainwater run-off and in the event you had a major spill it could help serve as a containment facility.

A. Correct.

Q. Would you briefly describe how rainwater run-off would get into the pond. Is there a sewer system in---

A. If you'll notice, this whole area is probably a 20-foot difference in elevation here--between here and here; and the area in this entire plant comes to the pond through

underground storm water drains.

Q. We were talking about current uses of the pond. I want to go back in time to ask you whether the pond has ever been used for any other purpose than the ones we've just discussed.

A. Back in the early days we used the pond for some of the washwater--wastewater from the dinoseb production unit.

Q. Was that neutralized washwater?

A. It was neutralized washwater.

Q. And you no longer use it for that purpose?

A. We no longer use it.

Q. What do you do with it now?

A. It's neutralized and probably 95 per cent of it is shipped off-site to be disposed of. There's probably 5 per cent that we treat through spent carbon beds that goes directly to the Mississippi River.

Q. In reviewing this list of chemicals that you manufacture at the plant, it appears to me that at the south plant the only ones you manufacture are DNBP, toxaphene and MSMA---

A. Right.

Q. ---since, well, 1980 at least. Is that correct? What is MSMA?

A. MSMA is a herbicide that is basically used to

control Johnson Grass primarily in cotton.

Q. Could you have minor losses of MSMA? Could it have ever gone into that pond?

A. No, sir. The MSMA plant is a contained unit. Anything that would be lost there would be picked up and recycled back in the process.

Q. Could there have been minor losses of DNBP that could have gone to the pond?

A. Yes.

Q. Where did the contents, the liquid contents, of the pond go to?

A. Okay. The pond--I don't know if we can see them.

Q. You can go point to it.

A. The picture, I don't think is a--you can just barely see the carbon filter units there. It's pumped from the pond through carbon units, comes back up and goes to the Mississippi River.

Q. And is discharged under a Clean Water Act Permit?

A. Yes.

Q. That's a Section 402 permit?

A. Correct.

Q. Where does the rainwater from the north plant go?

A. Okay. The rainwater from the north plant goes in a little pond up here.

Q. It doesn't get into the south plant pond, is my point.

A. The only time it can get into the south plant pond is we monitor the pH of this. As long as the pH is within limits we can go directly to the River. Anytime it is out of limits it diverts to the south pond to give us a final pH treatment.

Q. But it'd still be discharges under a Section 402 Clean Water Act Permit?

A. That's correct.

Q. I want to now talk--since I think we all agree that the operation we're looking at here is the DNBP or dinoseb manufacturing operation. Have you prepared an exhibit which illustrates what's involved in that and how you can have these minor losses you've talked about?

A. Yes, I have.

HEARING OFFICER: Do you want this exhibit in the record?

MR. KAUFMAN: Yes, I would. I'd ask that that be introduced as Exhibit No. 2 for Cedar Chemical Corporation.

[Document entitled "Chemical Products Manufactured at Vicksburg Facility" marked Cedar Exhibit No. 2, appended hereto.]

MR. WILLIAMSON: David, I don't have any objection

to y'all going ahead and entering that photograph, and then maybe y'all can make a reproduction of it or something.

MR. KAUFMAN: If you'll allow me to substitute a version of that for the record that shows the same thing. It's just going to take some time to get it photographed and enlarged.

HEARING OFFICER: That will be all right. I think it should be in the record because it's been referred to enough that the testimony won't mean much without it.

MR. KAUFMAN: Fine. I guess we would move its introduction as Cedar Chemical Corporation's Exhibit No. 3.

HEARING OFFICER: And you can provide that later for the record.

[Photograph introduced into evidence as Cedar Exhibit No. 3 with copy to be substituted and kept separate from record.]

MR. KAUFMAN: I am passing out a hand-held version of this big exhibit. We can go ahead and move its introduction now, George, or after testimony.

MR. WILLIAMSON: Go ahead and tell us what it is before we agree to it.

BY MR. KAUFMAN:

Q. Mr. Keen, while I'm putting this on the easel would you explain what this exhibit is designed to show.

A. Okay. In this exhibit it basically is going to

show where the dinoseb is manufactured. Of course I can't show you in the picture. But it is basically just two reactors. The dinoseb is produced in this reactor. It is then transferred to what we call a temporary storage tank. From the temporary storage tank we can go two or three ways with it. We can go--probably 30 per cent of our material is sold as technical grade and is bulk loaded right here. The rest of it goes to a blending tank where we produce the three and five pound blends that we talked about a little bit earlier. From there this also is shipped out in bulk containers or it can go to our packing unit where we can it in 5-gallon cans, 30-gallon or 50-gallon cans.

Q. Okay. What sort of raw materials do you use to produce this DNBP?

A. Okay. Really, the only three raw materials in DNBP are ortho secondary butyl-phenol, nitric acid or sulfuric acid.

Q. Now when those materials are put in a reactor is it a batch process?

A. It's a batch process. They're put in these reactors right here. [INDICATING ON LARGE CHART]

Q. Okay. And then DNBP is made?

A. Right.

Q. Can you have minor losses of a product in this reactor area?

A. Yes. Basically, the losses occur--dinoseb is pretty abrasive at a cool temperature. You pump--they have circulating pumps here and also pumps that pumps the material from here to the storage tank. Occasionally you'll lose a seal and have a packing leak, a valve packing leak, or--we sample materials here under these reactors. Occasionally you'll have a loss of product--dripping.

Q. What quantity of product are we talking about? Are we talking about ounces, gallons, drums full?

A. No. It would be in the ounces of pounds. I wouldn't be major.

Q. And that's per day?

A. That's---

Q. Per leak, per day loss.

A. Per leak.

Q. Do you have a leak every day?

A. No.

Q. How do you get the DNBP from the reactor area to the temporary storage tank?

A. Well, this pump is pumped through a pipeline from the reactor to the temporary storage tank. It's probably 100, 120 feet from the reactor to the storage tank.

Q. Can you have minor losses of the product in that transfer?

A. You could have if you had a valve packing or some

type of leak like that. It would be small.

Q. Are you talking about ounces or are you talking about gallons, drums--how much?

A. It would be in the ounce range. It would be a drip.

Q. Now today where would the losses of the product in this reactor area go?

A. Okay. Today the losses in the reactor would stay in that area. We've stopped up all the drains to this area. We have a vacuum truck that we would pick the material up with.

Q. All right. Once you vacuum it up where does it go?

A. It can go one of three places. It can go to the--back to the product storage tank or it can go to the hazardous waste for off-site disposal. It's depending on the material, if it's contaminated.

Q. Okay. That's the situation today. Has the situation been different in the past?

A. Yes, sir. That wasn't closed up until in November of last year.

Q. November 1985?

A. Right. Any drips or loss there would have--before November would have went to the pond that we talked about.

Q. Through the sewer system?

A. Through the sewer system.

Q. Okay. What do you do in the temporary storage tank area? I mean, is the product just sitting---

A. The product is just sitting here in the storage tank waiting for us to move it to either the bulk loading, the blending tank or whatever. Again, this product is pumped wherever we go. If we go to the bulk loading, it's pumped; if we go to the blend tank, it's pumped. There you could have occasional--the same problem: pump seal, pump packing, valve packing. We also sample these tanks daily; so you could have a loss there.

Q. What is the magnitude of losses we're talking about? Ounces, pounds, gallons?

A. Again, it would be small. Packing leaks is like a drop in a water facet or something like that.

Q. Okay. If you had a loss of the product in the temporary storage tank area today what would you do with it?

A. Again, it's contained. We would use the vacuum truck to pick it up and go to one of the other areas. Prior to November that also would have went to the pond through the storm water drainage system.

Q. Do you inspect your machinery to ensure that there are not leaks in pump packings?

A. We have a preventive maintenance mechanic that checks all of the rotating equipment daily in addition to

the operator that handles that area.

Q. And you show the solid arrow going to the blending tanks, and I think you told me that some of your product is pumped through the lines to the blending tank?

A. That's correct.

Q. What happens in the blending tank area?

A. In the blending tank area this is where we add our technical grade dinoseb and some of the other ingredients to make our three-pound and five-pound blends that we can for the agricultural use of farmers.

Q. Can you have a loss of product in that area?

A. That's exactly the same as the other. There are two pumps there and there's an agitator there to mix the product and if you lose a seal or packing gland on the agitator or something like that you could get a leak.

Q. Is that equipment routinely inspected?

A. Yes.

Q. We talked about what happened if you had a leak in this area today: it would be contained and sucked up in the vacuum truck. That's not always been the case?

A. No.

Q. What would have happened at some other point in time?

A. It would have went through the drainage system into the storm drain to the pond.

Q. You show two lines, solid lines, leaving the blending tanks, one going to packaging and one going to bulk loading. Is the product pumped through the lines to those two areas?

A. Right.

Q. Could you have a loss of the product there?

A. Anyplace you have a pump that has packing or seals in it you could have a loss.

Q. What volume or quantity of product are we talking about?

A. It would be small. It would be in the pound or ounce range.

Q. Now I want to talk about these dotted lines that you show. The first one I'll look at is from the temporary storage tanks to the hazardous waste storage. What does the dotted line indicate?

A. Okay. That would be for any material, or if we had to clean a tank or for our maintenance people to work on for whatever the reason, we could wash those tanks out and go to the hazardous waste storage area.

Q. What goes to the hazardous waste storage area?

A. That would be basically washwater from the tanks that would be disposed off-site.

Q. Okay. And how about the dotted line from the returned product storage to the hazardous waste storage?

What would that indicate?

A. We're talking about here? [INDICATING ON CHART]

Q. Yes. I'm sorry.

A. Okay. This is--any product that's returned to us for any reason. It could be loss of label, bent cans, a leaker--whatever the reason, that material goes through here.

Q. And from there where does it go?

A. Okay. Depending on the material, from there it can go back into our blending system to be reproduced or if it's contaminated it would go to off-site disposal.

Q. Do you try to recycle as much product as you can? In other words, if you have a loss do you try to run that back through the system first?

A. Certainly.

Q. If you have a loss in the returned product storage area is there any way for that to get into the pond?

A. To the best of my knowledge, no.

Q. Has there ever been a situation where that product could get through the sewer system onto the pond?

A. Not in that area.

Q. Those catchment basins in that area do not go to the pond?

A. No. This area was originally the old atrizine area that was a self-contained unit, and there's some sumps

there but they don't go anywhere. They had sump pumps in them. We pumped--that was a self-contained unit; so didn't anything from there go to the ponds without going through a treatment facility.

Q. So if you have a loss in that area you vacuum it up?

A. Right.

Q. And then it's shipped off-site?

A. Correct.

Q. Is that the same situation that you have in the hazardous waste storage area?

A. Right.

Q. Has that always been the case?

A. Right. Yes, sir.

Q. Has DNBP ever been introduced into the pond from any other causes or sources other than the ones we've just talked about? Has there been anyway that that's gotten into the pond except from these causes?

A. The only other way, and I'm not sure I may have mentioned it, was from our neutralized wastewater product--from the product itself. We have put that to the pond.

Q. But you no longer do?

A. No longer do.

Q. And that would have been water that would have gone out through your filters and on to the Mississippi

River under your Section 402 Permit?

A. Right.

Q. Has Cedar ever deliberately discarded into the pond the product DNBP or any other chemical products that you manufacture at the facility?

A. No.

Q. Have you conducted any investigation to determine whether there have been major leaks or spills of the products in this manufacturing process that you've described that have gone to the pond since November 1980?

A. Yes. I went back and looked at the record we keep.

Q. Would some of those records have been the supervisors log?

A. Correct.

Q. The hazardous waste inspection report?

A. Right.

Q. Some other reports?

A. We have a emission report that is filled out by our environmental operator that would also be listed.

Q. How often are these reports prepared?

A. Okay. The spill or emission report is only filled out if and when they have any type loss. The hazardous material data information is filled out daily and weekly. The supervisors log is filled out at the end of every shift;

so that would be three times a day.

Q. Are you confident that if there had been a major spill or leak of product in this manufacturing process that it would have been recorded on one of these records you review?

A. Yes, sir, it would have been recorded.

Q. What did your investigation reveal?

A. There wasn't any recorded.

Q. Would you give the Commission an idea of what the product DNBP costs.

A. It costs us about a dollar a pound for the technical grade material.

Q. By the technical grade, you're talking about the pure product?

A. The pure product; the product that's made in here.

Q. How much does a 5-gallon drum of technical product weigh?

A. It's 10 1/2 pounds per gallon. That would be, what, 52 1/2 pounds.

Q. So that's 52 1/2 dollars per 5-gallon drum for technical product?

A. Right.

Q. If you lose some of that product, in addition to the cost or the price of the product, what other costs do you incur in cleaning it up or deem would be a loss?

A. We have several direct expenses. The first thing is: any spill of a hazardous material or any material that we have to contain, we furnish our people rubber boots, coverall, rubber gloves and this sort of thing. Once the spill is cleaned up we have to discard those materials. Also, if any spill or a loss of material, any type leak or anything, was to lurk its way into our pond, for every pound of dinitrol that gets into the pond that we remove through our carbon filtering system can cost 30 to 32 bucks a pound. So every pound we lose, it's not just a dollar that we've lost from our product, it's about 32 bucks to treat it before we can dispose it into the water.

Q. And that's so your effluent discharge will be within the limits of your Section 402 Clean Water Act Permit.

A. That's correct.

Q. How long have you operated the Vicksburg facility without a lost-time injury?

A. The total facility is 3 1/2 years.

Q. Is that over a million manhours?

A. That's over a million manhours.

Q. How about at the dinitrol plant, have you ever had a lost-time injury there from a person being exposed to the product in the manufacturing process or as the result of some of these minor leaks and spills?

A. No. And about the 13 years we've operated this

plant we haven't had a lost time due to injury at the plant and we haven't had a lost time due to a person being ill from handling the product or anything like that. They have no recorded cases or anybody to the doctor, physician, or anything like that in those 13 years.

Q. Do you have an environmental operator at the plant?

A. Yes. We have four environmental operators there--one per shift; and they work rotating shifts.

Q. And what are their duties?

A. Their duty solely is to monitor the discharge of water, monitor the air; any type of--anything going to the pond that would be unusual. These guys are also--I'd like for the board to understand. They're not your normal, I don't think, operators. They have been with the plant an average of 13 1/2 years. They have worked at both ends of the plant. They are four people that we felt would be responsible--enough people to handle this job both in the plant, or if we had a problem to take care of the outside paramenter of the plant.

MR. KAUFMAN: If the Commission will indulge me one second: [CONFERRING] We tender the witness for cross-examination.

HEARING OFFICER: Do you want your flow process chart entered into the record?

MR. KAUFMAN: I'm sorry. If I have not introduced any exhibits I would now move for the introduction of these exhibits.

HEARING OFFICER: It would be No. 4. I think all the rest of them are introduced except this one.

[Flow Process Chart entered into evidence as Cedar Exhibit No. 4, hand-held copy appended hereto.]

HEARING OFFICER: We're going to recess for about five minutes before we cross-examine.

[RECESS FROM 10:30 TO 10:45 PM]

CROSS EXAMINATION

BY MR. WILLIAMSON:

Q. Mr. Keen, as I understand your title, it was production manager?

A. Right.

Q. Is that equivalent to more or less the plant engineer? Do you have a plant engineer besides yourself?

A. No. That would be equivalent to what some people might say a production superintendent or what. I have a base supervisor on each end of the plant that handle the routines of I guess the running of the plants of which there's five supervisors on one end and six supervisors on the other end that report directly to me.

Q. Have you worked there since y'all started making

dinoseb in 1973?

A. Yes, sir.

Q. As I understand it, you said that the general lay of the land is that it slopes from the background of this photograph toward the foreground of this photograph?

A. Yes, sir.

Q. Is that correct?

A. That's correct.

Q. And what types of elevation differences did you state?

A. I'd say it was probably 20 feet. I guess in some areas it would be more than that probably and in some areas less than that. Probably 20 feet.

Q. On your photograph over here, I don't know if you can see it.

A. Yes, sir, I can see it.

Q. There's something called dinoseb plant and dinoseb drumming. How long have those facilities been located exactly where they are?

A. The dinoseb plant has been--that's the original plant that was in '73--that's the bottom, very bottom, right there.

Q. The plant has always been right there?

A. Right. The plant has always been there. The drumming facility, from the time we started canning product it's

been there--the one directly above there.

Q. Well, is that since 1973?

A. I would probably say within the fall of '74, just as a guess.

Q. All right.

A. The other one you asked about, being the third item, would not have been there probably until last year.

Q. What's the third item?

A. The hazardous material handling area.

Q. All right. Where is that?

A. That's the far left one that you pointed to. Straight up.

Q. Would you come point for me. I don't see where you're talking about.

A. Right here. [INDICATING ON PHOTOGRAPH]

Q. You're pointing to something that says "return product storage."

A. Right. That's return product storage.

Q. And that return product storage on Exhibit 3 is the same as your return product storage on---

A. Right here.

Q. ---on your Exhibit 4.

A. Right here. On this exhibit they're not in proportion. If you'll notice, they're just turned around. They're just side by side in that building.

Q. And how long has that been there?

A. Probably two years.

Q. Where was it before then?

A. It was handled in the drumming facility building directly above the plant.

Q. So on your Exhibit 3 what you've currently got designated as dinoseb drumming, prior to--what date did you say? Eighty-three?

A. Yeah. That's---

Q. So prior to '83 the return product storage was in what you refer to in Exhibit 3 as your dinoseb drumming.

A. That's correct.

Q. How long was it there?

A. From '74 until this date.

Q. Okay. Why did y'all move it?

A. I guess basically the main reason we moved the plant is our drumming facility is full of drums. That's where we put our canned stuff right there. That was the only area of the plant that we had with a already--a cover to keep rain off the material.

Q. Um-hum. So are you referring to something on Exhibit 3 that says drum storage?

A. That's correct.

Q. What is drum storage?

A. Drum storage--can I look at that? Because we have

a drum area down under the hill.

Q. Yes, sir. I want you to look at it.

COMMISSIONER GOLDMAN: It sure would help us if we could see it. I don't know what y'all are talking about.

[OFF THE RECORD]

THE WITNESS: Okay. This building down here is the finished product storage area. This is not the building that you are pointing at, are you? You were pointing to this one right here. These gentlemen over here, these have got the building covered up.

BY MR. WILLIAMSON:

Q. Okay. Just for the record, I want to make the record clear that on Exhibit 3 that you're pointing to something you've got marked "return product storage," and right behind it "drum storage."

A. That's correct.

Q. Is that what you're talking about?

A. That's correct.

Q. All right. Go ahead with your explanation of Exhibit 3.

A. Okay. You want to know why that's a drum storage?

Q. Why did you move it?

A. Oh. We moved it because that is a building we have that has a roof over it that the stuff is not out in the weather.

Q. The drum storage building or the return product storage?

A. Both.

Q. Both of them. How long has your drum storage been where it's shown on Exhibit 3?

A. The building has been there, you know, since '75; but like I say, we haven't been using it for that particular application for about two years.

Q. Okay. So the building on Exhibit 3 that you've got marked as drum storage has been there since '75, but you haven't used that building for drum storage.

A. Not for that drum storage, no.

Q. Okay. Now I want you to answer me this question: On Exhibit 3 I want you to tell me where the drum storage area was before you moved it to the location that's shown as--on Exhibit 3 itself.

A. The drum storage had been in this area that you pointed out beforehand.

Q. I want you to tell me. State what you're talking about.

A. The one that says dinoseb drumming.

Q. Okay. That's on Exhibit 3.

A. Right.

Q. Now did you move the dinoseb drumming on Exhibit 3 to what you've got called drum storage on Exhibit 3?

A. Probably about two years ago.

Q. Okay. Now, Mr. Keen, before you moved what you've got called drum storage and the term product storage where would the surface run-off from this area called dinoseb drumming--where would that surface run-off have gone?

A. The surface run-off would have gone to the containment pond.

Q. And where is the containment pond?

A. This is this area right here. [INDICATING] This is anything outside this drumming building would have gone to this pond.

Q. Okay. Mr. Keen, what you're pointing to when you said "this pond," you pointed to something called the south---

A. South impoundment pond.

Q. The south impoundment pond on Exhibit 3?

A. Right.

Q. So prior to 1983 all of the surface run-off from that drum storage area would have gone to the impoundment pond. Is that correct, sir?

A. Anything outside that building would have went to it.

Q. So, Mr. Keen, I guess then it's reasonable to assume from your explanation that in July of 1981 that what you have been referring to as drum storage would have been

in the area on Exhibit 3 called dinoseb drumming. Is that correct, sir?

A. Basically that's right.

Q. Are you familiar with the carbon filters at the plant there?

A. Yes, sir.

Q. Are you familiar with the operation of those carbon filters?

A. Pretty much so, yes, sir.

Q. Do carbon filters ever have to be backwashed?

A. Yes, sir.

Q. Why do they have to be backwashed?

A. To redistribute the flow of material through the bed.

Q. What kind of material would collect on those carbon--in the carbon filters?

A. I would suspect that most any material would collect on---

Q. Would dinoseb collect on them?

A. Dinoseb, yes, sir.

Q. Didn't you state earlier that it costs y'all like $35 or something or another for--what was that figure you used?

A. Thirty to thirty-two dollars.

Q. For what?

A. Per pound of dinoseb.

Q. So on the carbon filters when you wash this stuff off, the dinoseb collects on the filters---

A. The dinoseb collects on the carbon in the filters.

Q. And then you backwash those carbon filters.

A. Right.

Q. And what do you do with that backwash material now?

A. The backwash material from the carbon beds goes to the pond or impoundment or whatever you want to call it.

Q. Now which ponds does it go to, Mr. Keen? I hate to keep bothering you.

A. That's okay. [GOES TO PHOTOGRAPH] The backwash from these carbon filters---

Q. And you're pointing to Exhibit 3.

A. Exhibit 3, the carbon units themselves--comes back to this pond.

Q. Which is shown as south impoundment pond?

A. South impoundment pond.

Q. What happens to the carbon in the carbon filters after--I'll use the term "spent," if you know what that means.

A. Yes, sir.

Q. What do y'all do with that carbon then?

A. It's shipped off-site to be regenerated.

Q. Okay. For the Commission when I use the term "spent carbon from the carbon filters" what am I talking about?

A. That's carbon that has absorbed basically all that it's going to of any ingredient, including dinoseb or whatever you were trying to---

Q. Is that kind of carbon any good to Vertac?

A. No, sir, not at all.

Q. And y'all ship it off for what purpose?

A. We ship it off to a carbon recovery--people that regenerate the carbon, and I guess send it back to us or whoever needs the carbon.

Q. Is the carbon, the spent carbon from your carbon filter units that you just said you ship off, is that a manifested product? If I used that term, "manifested," do you know what I mean?

A. No. I'm not sure I understand the question.

Q. In your capacity as production manager do you get into the development of manifest lists for hazardous waste?

A. No. That would be the environmental engineer or the lab people.

Q. Okay. And what is that environmental engineer's name that would be familiar with that?

A. I would think Mr. John Hill.

Q. John Hill?

A. Um-hum.

Q. Is he here?

A. Yes, sir, he's here.

Q. Which gentleman is he?

A. It's the gentleman on the back in the brown shirt.

Q. Okay. Mr. Keen, in your capacity as production manager I just want to be sure--as I understood what you just told, you said all the spent carbon is shipped off-site. Is that right?

A. Right.

Q. Now long has that been the practice at Vertac?

A. All the carbon has gone off-site ever since we've had the carbon units.

Q. Okay. And when did you put those in?

A. From guessing now, I really don't know specifically when those were put in.

Q. All right. Go ahead and guess.

A. It must have been in '77 or '78--in that range. I could be off a year or so either way. It's been more than three or four years.

Q. Was it before 1980?

A. I would say, yes, before 1980.

Q. When you backwash your carbon filters--I'm going to switch diagrams on you here.

A. Okay.

Q. I want you to tell me on this exhibit, which I believe is---

HEARING OFFICER: That's No. 4.

BY MR. WILLIAMSON:

Q. Would you show me on Exhibit 4 where your carbon filters are.

A. Which is Exhibit 4?

Q. This one right here.

A. I can't show you on---

Q. All right. Well tell me about where they are.

A. ---there where they are, because this is all backwards. This part of Exhibit 4 is down here.

Q. Well in the process stream can you---

A. Okay. The filters are right over here.

Q. In other words, it's not directly in your process stream at all.

A. No, sir.

Q. On Exhibit 4 where it shows hazardous waste storage what area is that on Exhibit 3?

A. That's the area these gentlemen couldn't see awhile ago.

Q. Okay. So your hazardous waste storage---

A. The hazardous waste storage and return product storage is basically the same building. It is just a roadway in between.

Q. Okay. And that's shown on Exhibit 3 as return product storage and drum storage.

A. Yes, sir.

Q. Okay. When you backwash these filters, as I understood what you said, that the backwash itself goes into the south impoundment pond.

A. Yes, sir.

Q. Are you familiar with the backwashing process itself?

A. Yes, sir.

Q. Are you there? Have you ever observed it?

A. Yes, sir, I've been there and observed it.

Q. In the backwash water itself is there any carbon in there?

A. Yes, sir. It's trace amounts of carbon would be in your backwash.

Q. What's a trace amount?

A. In pounds or---

Q. Can you see it?

A. Oh, yes, you can see it.

Q. What does it look like? Tell us what it looks like.

A. It's just a black carbon pretty much like crushed coal.

Q. It's in the water itself?

A. It would be in--it would settle out in the water at the end of the pond.

Q. You used the word "trace amounts." What are you getting at? What does that mean?

A. Well, trace amounts would be, you know, if you had a gallon of water and you saw a particle of something dark floating in it, you know, that would be trace amounts. And this--I would say in a normal backwash you would probably get three to four pounds activated carbon back.

Q. So each time you backwash you're going to get three or four pounds of carbon?

A. Not--I wouldn't say each time. A lot depends on the carbon itself. If the carbon is new carbon, you don't tend to get as much as you would with some of the old carbon.

Q. And on that carbon dinoseb is on the carbon particles?

A. I'm sure.

Q. And those go from the--on Exhibit 3 what y'all call the carbon units back to the south impoundment pond.

A. Yes, sir.

Q. Would y'all ever have an occasion there at your plant to store spent carbon?

A. Not to the best of my knowledge.

Q. When you buy your carbon how is it shipped to you?

A. Well, it comes in, in a tank truck load of which we have a--again, I'd have to show you on here. These--what we call the carbon filters, we have a tank here that's empty. Okay. So when the truck comes in he unloads his carbon into the empty tank, and then we load his truck back with a load going back.

Q. Would you ever have occasion to have a drum of carbon stored in your drum storage area?

A. Yes, sir. Back in the past we used activated carbon for one of our other processes and we would have had carbon there. You might have found even carbon down in the toxaphene area which is adjacent to the dinitrol area.

Q. What other process do you use carbon in?

A. I can't remember now where we used it. I know we used it in the tox. process back in the early days.

Q. What's the early days? You've got to give me some date.

A. Back in the '74, '75 range.

Q. So are you saying that after '75 you wouldn't have had any use for carbon in drums?

A. None of this--I don't think we would have had any use for it, but a--a person that handled one of our raw materials from the tox. plant used activated carbon in his process. In other words, we were manufacturing some HCL in the tox. process, and this guy ran it through activated

carbon---

Q. Let me ask you this question: What's the latest date that you would have had carbon stored in drums in your drum storage area?

A. To any appreciable amount it would have been sometime in '82 or '83. We may have some drums of carbon that's used in some of the areas of the plant now that may be--I couldn't say there's not a drum or a bag or something like that.

Q. Would those drums of carbon that you said might have been there until I guess '83 or '82, would that have been at the same place as the drums containing hazardous waste materials?

A. It could have been if they would have came from any area that's contaminated, they could have been, yes. Now the hazardous material area, anything that's hazardous to us in the plant goes to that area.

Q. What kind of carbon would have been in your drum storage area that contained hazardous material?

A. What kind?

Q. Tell me what process--you told us about that y'all make nitric acid and ammonia and---

A. There were drums of activated carbon that sit down on the track down there adjacent to the tox. plant for several months. They were left there by--I can't remember--

I was trying to think of the name of the outfit that ran that system. He was supposed to have came back, and we had a contract with him to clean that area up, and when the plant shut down he never came back. I suspect that the carbon you're talking about came from that area, but I can't specifically say that it came from that area.

Q. What area is that now?

A. That would be the area adjacent to the toxaphene plant where a guy regenerated some carbon and ran some HCL through it.

Q. How many drums do you think might have been in the drum storage area?

A. If I remember right, this guy used about 20 or 30 drums per charge at this filter; so I would say they could have been up to 20 or 30 if that's where it came from.

Q. In the drum storage area itself how many drums might you have had at one time?

A. In the drum--which size? A 55-gallon drum or something of that nature?

Q. Um-hum.

A. We could probably have any number: 2 to 300.

Q. When you backwash the carbon filters who frequently do you backwash?

A. It depends on the flow rate through the carbon bed. It could be once a shift or once per day or--it's

really no set time to backwash it. I would say once per day just to answer your question.

Q. Would that be on a routine basis? I mean on an annual basis would it be once a day?

A. Probably. Probably once a day. As long as that system is in service, and keep in mind that that system is not in service 24 hours a day or anything like that. It's depending on the requirement level.

Q. And you backwash those carbon filters when the filters are---

A. Well when the filters get plugged, when you can't get the flow of water properly through them, you backwash it to unstop the channel and this sort of stuff.

Q. When you start losing head?

A. Yeah.

Q. Does that mean that the carbon is clean or dirty?

A. It means it's dirty.

Q. So you don't backwash the carbon filters until the carbon is dirty?

A. That's pretty much correct.

Q. Mr. Keen, earlier, as I understood your testimony, you said that prior to coming over here in front of the Commission today that you had reviewed the supervisors logs and inspection reports and so forth.

A. That's right.

Q. Is that correct?

A. That's correct.

Q. Did you review an inspection report dated July 27, 1981, by any chance?

A. If we had it on file.

Q. Well if the Bureau of Pollution Control had done an inspection report wouldn't you have it on file?

A. Someone in our organization may have had it on file. It doesn't necessarily have to be me. I don't have very much contact---

MR. KAUFMAN: I haven't seen this document.

MR. WILLIAMSON: Let's have this marked as S-1 for identification.

[Document entitled "Solid Waste Management Branch Activities Form" marked Exhibit S-1 for identification.]

MR. KAUFMAN: This is one of the agency's inspection documents; right? This is not an inspection report that they prepared; right?

MR. WILLIAMSON: No. It's a Bureau of Pollution Control inspection document, which of course is a public record.

[WITNESS EXAMINING DOCUMENT]

HEARING OFFICER: Let's proceed, George.

BY MR. WILLIAMSON:

Q. Mr. Keen, I'll hand you what's been marked as Exhibit S-1 and ask you if you can identify that.

A. It looks like an inspection report filled out by Mr. David Lee.

Q. Would that have been one of the inspection reports that you had access to before you came over here to testify today?

A. No, sir. What I testified to earlier would be a report that we would fill out--that would be filled out by our people. It would be the shift supervisor or the environmental operator or Mr. Epp. I wouldn't have access to any of this type. I don't get these. They would go to Mr. Epp. I don't have a copy of it, to answer your question. What I was talking about would be the spill or fume report that we would fill out internally; not reports that some of these people would fill out.

MR. WILLIAMSON: David, do y'all have any objection to the introduction of this into evidence at this time? It's a public document.

MR. SMITH: I don't know that I have any objection. I don't think it's relevant on this cross-examination; but we don't have any objection.

MR. WILLIAMSON: We would introduce it, please.

[Exhibit S-1 entered into evidence, appended hereto.]

BY MR. WILLIAMSON:

Q. Mr. Keen, I've opened--the pages on this document are unnumbered. I'll open to a section that has a page that starts in the left column under "Requirement: 402.7-173," and this is from Exhibit S-1. Would you read that entry under "Requirement," what it states there.

A. "Containers holding hazardous waste must be kept closed and must not be opened, handled, or stored in a manner which may cause a rupture or leak."

Q. And under the column that says "In compliance - yes or no," which column is marked?

A. Well it looks like both of them is. One of them has been--I guess you'd say the "no" one is marked. The other one has a mark there.

Q. Okay. The "no" is marked then. So it was not in compliance, apparently. Under "Comments"---

HEARING OFFICER: George, are you going to introduce the person that made that inspection as a witness?

MR. WILLIAMSON: Yes. I will later. I'm just going to get it in right now though.

BY MR. WILLIAMSON:

Q. Go ahead and read under "Comments," Mr. Keen.

A. "A number of drums containing carbon were rusted through; some oozing dark liquid. Most was on concrete pavement. Many drums obviously in a state of advanced deteri-

oration. Approximately 700 drums total."

Q. Okay. As I recall your earlier testimony--since this was dated 1981---

A. Um-hum.

Q. ---and if those drums were leaking and deteriorating as stated in this field investigation report, and based on your earlier testimony, those drums would have been located where the dinoseb drumming area is shown on Exhibit 3. Is that correct?

A. No, sir, that's incorrect.

Q. Where would they have been?

A. The dinoseb waste, or return product, would have been here. This is carbon, and that could have been, I would suspect, in this area, you know. Maybe your gentleman can look more at this sheet and tell where they were. But, no, sir, the carbon would not have been in that area.

Q. How many drum storage areas do y'all have over there?

A. Now?

Q. In 1981.

A. In 1981? I would suspect that those drums were stored outside, would be my guess if they had carbon in them, because I couldn't tell you that they had hazardous waste. I wouldn't have any idea.

Q. As you stated earlier, didn't you say there never

would have been any more than 20 or 30 drums containing carbon?

A. After '82 that's correct. Prior to 1982 there could have been more because---

Q. How many more would there have been?

A. According to your number, 700. I can't argue with---

Q. Didn't you state earlier that the most it would ever be there was 2 to 300?

A. No. That would be in the area down there we have contained. Now this area--you're asking me about how many drums can be stored right here.

Q. If there had been 700 drums stored there where would they have been? I want to hear your explanation on that.

A. I thought I showed you awhile ago. I would say they were in this area right here that's in an area that doesn't have a shed over it or anything.

Q. I want to get the area that you're pointing to now.

A. I don't know how to--you know, I can just show you the area. There's nothing wrote on there. That would be the area I would suspect right there. [INDICATING]

Q. You told me earlier that there's only been two places where there's been drums, as I understood your

testimony, like the dinoseb drumming on Exhibit 3 and then what's called drum storage or return product storage on Exhibit 3. Now you're telling me there's a third place where the drums might have been. Is that correct?

A. Yes, sir. There might be four or five places where drums could have been---

Q. What I want to know---

MR. SMITH: Let him finish his answer.

BY MR. WILLIAMSON:

Q. Okay. Go ahead.

A. You know, if they were drums that didn't have a hazardous material in them. We stored activated carbon in drums at one time--way back when we used carbon back in the earlier days. We stored it in drums. I had thought they were pasteboard drums when--that's what the "rusted" confused me, because I thought the carbon we got in would have probably been pasteboard drums or bags. At one time I couldn't tell you the amount of activated carbon we had onsite, because it would have been quite a bit.

Q. Okay. I want you to come now to Exhibit 3 and I want you to point to me every place that you're now saying that you might have had hazardous waste stored in drums.

MR. SMITH: Can I interpose an objection? I'm trying to be as cooperative as I can; but we're getting awfully far afield from the issue that is before this

Commission today, which is whether or not the DNBP that works its way into the surface impoundment results from de minimis losses. I'm sure that it's the position of Mr. Williamson--he's contending that somehow these carbon drums are hazardous waste, which is not in the record, nor is that the case, nor is that relevant to what we're talking about today. And for the sake of brevity I'd like to interpose an objection until some relevancy is established in connection with this.

MR. WILLIAMSON: May I respond to that? It certainly is relevant, because I told you in my opening statement that the only time that de minimis exception applies is if all of that water comes from a process stream. What I'm showing is that water that gets into this impoundment does not all come from the process stream; it certainly does not. And this man has already said that.

HEARING OFFICER: I think I'll let him proceed with the questioning on this.

THE WITNESS: Would you repeat your question, please.

BY MR. WILLIAMSON:

Q. I wanted you to come to Exhibit 3--since you're the production manager and you've been there forever, I want you to show me on Exhibit 3 all the places where these drums that could have contained hazardous waste or DNBP would have

been stored.

A. DNBP, the only place that DNBP could be stored would be in the dinoseb drumming area or down here at the return product storage area.

Q. Okay.

A. Now I've got to assume that the carbon you're talking about is--is hazardous material, because, you know, we could have drums--if I pointed out every place that we could have a drum, you know a trash drum that you put your paper and trash in, it would be all over the place.

Q. Okay. I understand what you're saying. You pointed to this area right here. What would have been stored there, Mr. Keen?

A. If it was carbon in those drums that's where it should have been stored. That's outside, and it shouldn't have been hazardous. There shouldn't have been anything--there would have been no dinoseb whatsoever.

Q. Mr. Keen, a moment ago you told Mr. Kaufman, your attorney, that on a permit basis X-amount of product might escape--and I forget that number. Do you recall what you said?

A. Yes, sir. In the dinoseb production units or anyplace we would transfer the technical product itself there should never be more than a few ounces or pounds or something in that range.

Q. So on a per leak basis you're saying it could contain a pound of what?

A. Of dinoseb tech. material. It could be a pound or so of material.

Q. And where would that material go?

A. Prior to November---

Q. I don't mean into a pond. Are these pumps, are they all located on concrete pads or what?

A. Yes, sir, they're all located on concrete. In the detect unit itself they're all inside a diked basin. There's probably about a foot concrete wall around the dike area.

Q. So if the pump leaks it is your objective to capture the leakage?

A. That's correct. It should stay in the pit. If a seal or something goes out, depending on if the pump is running, it can sling some out of the enclosed area.

Q. All your pits--what you refer to as a pit, is that a concrete lined---

A. A concrete lined pad.

Q. As I understand it, your dinoseb plant has been there since 1973.

A. Yes, sir.

Q. Is the equipment that's in use now in 1986 more or less the same equipment or is it new or been replaced?

A. No, sir. I'd say all the--the reactor area of the plant was replaced in '75. The dike area where the concrete is was resurfaced probably in '84--'83 or '84.

Q. So your original equipment lasted about how many years?

A. The original equipment probably lasted eight years.

Q. That would be from '73 to say '81 or '82.

A. Yeah. But we changed them out and made a larger vessel area; so, you know, we changed them out in '85.

MR. WILLIAMSON: I think that's all the questions I have of this gentleman.

HEARING OFFICER: Does the Commission have any questions of Mr. Keen? Do you have any redirect?

MR. KAUFMAN: Could I have just a few seconds to see if we might have?

HEARING OFFICER: Yes.

[OFF THE RECORD]

REDIRECT EXAMINATION

BY MR. KAUFMAN:

Q. We were talking about the backwashing process. The carbon that has DNBP on it or anything else is sent off-site for disposal; correct?

A. Correct.

Q. What you wash are the filters; right?

A. Right.

Q. And it is this washwater produced from that cleaning of the filters that goes back into the pond; correct?

A. That's correct.

Q. Whatever got on the filters was in the pond to begin with; correct?

A. That's correct.

Q. And that was from these minor losses that we talked about; correct?

A. Yes.

MR. KAUFMAN: No further questions.

RECROSS EXAMINATION

BY MR. WILLIAMSON:

Q. Mr. Keen, you just said that any DNBP in the filter would have been in the pond in the first place?

A. I said that the DNBP that we accumulated on the filters had to have come from the pond. Where they originally came from I didn't say; but all the water from the pond goes through the filters.

Q. Okay. But the backwash containing the carbon goes to the pond from the filters.

A. Correct.

MR. WILLIAMSON: Okay. Thank you. That's all.

[OFF THE RECORD]

BY COMMISSIONER TEMPLE:

Q. I'm just a little confused on the routing of this water that you wash the filters out with. You stated that the water that goes into the filters comes from the pond itself?

A. The water that's discharged through the filters to the River comes from the pond. The backwash water that he's speaking of would be city water that you intentionally put through the bed just to fluff it up to where it will catch more of the product or whatever you're trying to filter, and it goes to the pond.

Q. I still don't quite understand.

A. Okay. We have five vessels that are--holds activated carbon, and they're just packed with carbon. We have a pump that pumps the water from our impoundment or pond that goes through this bed. This bed takes out everything that you want it to take out. Then it goes to the River--that water from the pond through the bed to the River. Okay. Now if your bed gets saturated with--most of the time it's from rains or dirty water. If it comes a rain it will muddy the bed--will stop up more, let's say. You can't get the flow through it. At that time we go the opposite way with just regular city water--goes through the bed the opposite way back to the pond. That cleans the carbon, okay, to where you can go back and put it back in service.

Q. I get you.

A. I hope I've helped you. I've probably got you confused.

HEARING OFFICER: Commissioner Goldman, did you have a question?

BY COMMISSIONER GOLDMAN:

Q. I believe you are operating under two Clean Water permits, is that correct, at the present time?

A. I can't answer that. I really don't know. The only one I'm familiar with is the one.

MR. SMITH: I may be wrong too. I think there's just one NPDES discharge permit.

COMMISSIONER GOLDMAN: I understand you stated there were two different ones--two permits.

MR. SMITH: No, sir. I'm not sure what you make reference to. You're talking about my opening statement?

COMMISSIONER GOLDMAN: Right.

MR. SMITH: I think what I was talking about at that point was that this facility, this impoundment, will continue to be regulated both under Clean Water through the NPDES permit and continually under RCRA, both as a generator of hazardous waste and under the--the surface impoundment itself under the imminent danger provisions. But there's only one Clean Water permit, and it's issued pursuant to 402 of the Clean Water Act.

COMMISSIONER GOLDMAN: Have you had any violations

of that permit?

MR. SMITH: I don't know that.

THE WITNESS: I can't answer that either. Our environmental engineer would have to answer that because he fills out those forms.

MR. SMITH: We can get that from the State or from our people. I don't know. Have we, gentlemen?

THE WITNESS: Not in the last 12 months.

HEARING OFFICER: Any other questions by the Commission?

[WITNESS EXCUSED]

GARY DIETRICH,

remaining under oath, was recalled and testified as follows, to-wit:

REDIRECT EXAMINATION

BY MR. KAUFMAN:

Q. Earlier this morning you set forth the criteria that you believe was relevant to the consideration here under the de minimis exception, and you've heard Mr. Keen testify. Has he given you all the facts that you need to render an opinion as to whether or not this pond meets that exception?

A. Yes, I believe so.

Q. Have you formed an opinion as to whether or not this pond and the losses which have gotten into it meet the

de minimis exception to the mixture rule?

A. Yes, I have formed an opinion.

Q. What is your opinion?

A. I believe that what he has--the facts that he's laid out, demonstrate that the pond only received de minimis amounts of dinoseb and therefore are not hazardous waste and are not regulated as a hazardous waste facility.

Q. Have you developed any other evidence on your own to substantiate that only de minimis losses have occurred which have gotten into the pond?

A. Last week when I queried the plant officials and came to basically the same conclusion I've point out now I was still somewhat worried. I thought maybe some of the concentrations of--in the few samples, the few samples that have been taken, the concentrations that they indicated might result from larger than de minimis. As a result I asked for a sampling study to be carried out, and I laid out the type of samples that I wanted, the number of samples and locations that I wanted, in order that I could verify for myself whether the losses that we--whether the concentrations we see on the site are resulting from de minimis losses. We now have the results of those studies and I have considered that additional information.

MR. KAUFMAN: I'd like to identify an exhibit. This will be marked for identification as Cedar Exhibit 5.

[Diagram depicting samples collected marked Cedar Exhibit 5 for identification.]

MR. KAUFMAN: And also I'd like to mark as Cedar Chemical Exhibit No. 6 for identification a one-page document entitled "Quantification of De Minimis Losses.".

[Document entitled "Quantification of De Minimis Losses" marked Cedar Exhibit 6 for identification.]

HEARING OFFICER: Okay. Proceed, please.

BY MR. KAUFMAN:

Q. Mr. Dietrich, would you explain to the Commission what these Exhibits 5 and 6 show.

A. If I might I would like to start with Exhibit 6, which is this exhibit. This basically provides a diagram of the rationale for the study. I theorized that if there were de minimis losses they would fall at various places on the plant site. Some of that material that is lost would accumulate in the site soils and some would be washed off of the site soils by overland--by rainwater run-off and washed into the impoundment. That amount that washed off into the impoundment, some of it would stay solubilized and would eventually leave the impoundment, be pumped through the carbon filters and removed in the carbon filters before discharged into the Mississippi River, and some amount would be accumulated in the sediments in the pond.

So if there was somehow that we could quantify the amount of materials accumulated on the site, the amount of materials accumulated in the sediments of the pond, and the amount of materials that are fairly continuously discharged through the carbon filter, we might be able to get a handle on the total amount of DNBP that has been lost and then from that make the determination as to whether those losses are de minimis. That is the rationale behind the study.

With respect to accumulation in the pond sediments, I asked for 18 samples to be taken in the three portions of the pond. Exhibit 5 shows the locations of those 18 samples, Samples A through R, and I can come back later. It also shows the results in the upper left-hand corner, which we will talk about later.

Q. Okay. And do I understand that you also took samples of soil at the plant that's not in the pond area?

A. Yes. Unfortunately, we do not have a drawing on that; but I might refer to Exhibit 3. [GOES TO PHOTOGRAPH]

We took samples in the area right behind the dinoseb manufacturing plant. It's in a railroad track area. It's between the dinoseb plant and the--what's identified here as SP-5 and SP-6.

Q. State sample points.

A. State sample points. And we also took one sample in front of the dinoseb manufacturing plant. In that

study--in the six samples that we took behind the plant they were core samples taken with a core sampler. A 2-foot core was taken. Each one of those cores was then divided into four portions so that we could analyze one to two inches, four to six inches--I'll have to review my notes here. [EXAMINING DOCUMENT]

We analyzed the first 2 inches, we analyzed 10 to 12 inches, we analyzed 16 to 18 inches, and we analyzed 22 to 24 inches. One core was taken from in front of the plant. The reason for analyzing the different levels or depths in the sample was to get some idea of whether the dinoseb was being--staying onto the surface soils or whether it was migrating down deeper into the soil. Also with each sample we estimated the area that that sample was meant to represent. So we got a surface area that equated with each one of the core samples.

Q. Okay. And what you tell what your analysis shows.

A. Okay. Let's start with the--kind of following Exhibit 6. Let's start with the accumulation of the dinoseb under the--under the plant soils. The seven core samples show that they had PCB--DNBP--I also work on PCB's. Where am I today? [LAUGHTER] They show concentrations ranging from 2 to 105 parts per million average concentrations in the core. They also indicate that there--that the material is not migrating. There is a tendency for a decrease in

concentration as you go deeper into the core sample.

The area that we sampled basically represented about 22,000 square feet and approximately half an acre. And if I take the area and multiply it by the concentration I come up with an indication that there's about 180 pounds of dinoseb in that one-half acre that we did sample.

At that point, from what I've been able to see in the visual inspection of the plant, there may be another several areas around there that could have and should have been sampled if we had enough time. I tried to make an estimate of how many other areas might have some amount of contamination and estimated--I guess you'd call it a professional judgment--that maybe it's two acres in total that might be--might have some contamination.

If I can extrapolate from the sample that I did take, if I can take a half an acre that I did sample and extrapolate that to a two-acre area, and if I can also, to be very conservative, assume that there's an equal amount of DNBP below the two feet that we sampled. Again, I'm trying to be very conservative. I come out with a figure that shows that there is probably about 1365 pounds of dinoseb on the plant property. I theorize that that material accumulated over a 13-year period and if indeed that is true, that works out to be a loss of about three-tenths of a pound per day as been accumulated in the soils on the site.

If I go back to Exhibit 6 and take the next area, the accumulation of DNBP in the sediments of the pond---

HEARING OFFICER: Excuse me. I believe you're referring to Exhibit 5. Six is your schematic. Five shows where your sampling stations are. That's six, the one you just held up.

THE WITNESS: Okay. I will refer to Exhibit 5.

HEARING OFFICER: Okay.

THE WITNESS: I think I didn't indicate earlier the procedure that we used for sampling. Basically these were split-spoon samples taken of the sediment. The sediment in this pond is not a sludge. It's basically the soils that have been washed off from the site and those soils have absorbed on them apparently the DNBP that we're talking about. We took split-spoon samples of that sediment. We also estimated--sampled the depth of the sediment.

The results that we obtained is that in pond which I will call one--I'm referring to Exhibit 3. Pond No. 1 is where the run-off enters into these ponds. Basically the run-off enters here and I believe flows around over here and out here. [INDICATING]

The sediment depth in this pond is 3.9 feet, average DNBP concentration of 74 ppm. The average sediment depth in Pond No. 2 is 1.2 feet; average DNBP concentration of 12 ppm. And the average depth of sediment in the last

pond is .8 feet and a concentration of 35 ppm. If you take the concentrations, the depths and the area of those ponds, you can calculate the poundage of DNBP in those ponds. In pond No. 1, I've calculated 1264 pounds; in pond No. 2, 64 pounds; in pond No. 3, 37 pounds. That totals to 1365 pounds.

And again, I wanted to be err on the conservative side. I said let's double that. Let's assume that there may be some of the DNBP that has migrated into the soils right underneath the sediments which we did not sample. If I take that doubled figure of some 2730 pounds and conclude, as I did previously, that that accumulated over a 13-year period, then I'm looking at a loss of about six-tenths of a pound a day that could produce those values.

Finally, I needed to estimate the last item on Exhibit No. 6, and that is, how much dinoseb is lost each day, flows into the pond, remains either in dissolved or suspended form in the waters of the pond and ultimately is taken out by the carbon filters. Unfortunately, we don't have a way to analyze--to sample retrospectively, so I've had to basically go through an engineering calculation to come up with a probable value in that area. I assumed that the drainage area that flows into those impoundments is approximately 20 acres. It is basically the area that Mr. Keen pointed out earlier; basically this area right here.

I'm referring to Exhibit 3 there.

MR. SMITH: And so that the record will be complete on that, Gary, you're basically encircling the south plant; is that correct?

THE WITNESS: Basically the south plant. I have assumed an average 4-inch rainfall a month, and I've taken what I believe is a conservative high value for the parts per million of dinoseb in the pond waters. I've used the figure of 8 ppm. I suspect that the average concentration in that pond is more in the area of 2 to 4 ppm. But I wanted to be conservatively high, and at least we have a value from the State sampling that shows a 8 ppm. value in the water column.

If I take those numbers and appropriately multiply them, I conclude that there is a loss of about 144 pounds a month to the water phase of the impoundment, and if I divide that by 30 days a month I get something like 4.8 pounds a day would be lost to the water column.

Having said all of that, if I can go back to Exhibit 6 and begin adding up all of these three, if you will, stints of DNBP from de minimis discharges, from de minimis losses, I conclude that I have 4.8 from the water column, 4.8 pounds a day from the water column, six-tenths pounds a day accumulated in the sediments of the pound, and 23 pounds per day accumulated on the soils. That worked out

to be about 5.7 pounds a day that I believe are lost from the production process.

BY MR. KAUFMAN:

Q. Have you made any attempt to compare those losses with the amount of volume of product that you produce during the day and come up with what percentage that represents?

A. Yes. I asked for production records for the last 13 years. I took those records and averaged those. The average production is about 3.8 million pounds a year. That works out to be about 10,000 pounds a day. If I take the 5.7 pounds lost against the 10,000 pound per day production, I'm talking about a loss of approximately six hundredths of one per cent.

In my considered opinion that is a de minimis loss. Indeed that is the level of loss that I had in mind and that I believe EPA had in mind when we developed the de minimis rule that we talked about earlier.

Q. As you sit here today do you have any concerns that this pond that we're looking at today poses any threat to the human health and environment?

A. I don't, and the reason I don't is that dinoseb has a great affinity for being absorbed on the soil. It is not very soluble in the water. And to the extent that you are going to get an unavoidable washing of this material into the pond, a very safe place for it is in the sediments

in the pond. They are well observed on the sediments and that material is probably not going to migrate anywhere certainly in significant amounts and certainly is not going to wash into the surface waters, and it's unlikely to migrate into the groundwaters.

I must admit that when I saw and calculated a figure of 1300 pounds of dinoseb in the impoundment I did ask the same question. The evidence that I have been shown indicates that there's no indication of groundwater contamination in down-gradient wells. In fact, I would even say that the ponds serve a protective role from a surface water contamination point of view.

Q. How is that?

A. Whether we like it or not there is going to be run-off from that plant, and whether we like it or not there is always going to be some de minimis losses of the product onto and distributed in the plant soils. If it weren't for those impoundments all of that material would wash into the two bayous that drain that particular area and would be entrained in the environment. The ponds serve the purpose of collecting that wash-off and providing an opportunity to hold it until it can be treated through carbon filters before discharging into the surface waters. So in that sense the ponds serve a very valuable role in the protection of the quality of surface waters in the area.

Q. And in reaching your opinions that you've rendered today have you taken into consideration the results of the analyses performed by the State?

A. Yes. I've looked at those analyses. I find that they are for the most part within an order of magnitude of the numbers that--the results that we obtained. In area-wide sampling, the order of magnitude is within common acceptability.

So I think that those numbers are helpful. My problem was that when I first saw those number they didn't tell me a great deal because they didn't relate the concentration to the volume of material that was contaminated so I could get some sort of a calculation of pounds that we were looking at and in turn determine whether those pounds represented a de minimis loss or something greater than a de minimis loss. That is precisely why I asked for the study that I just outlined.

MR. KAUFMAN: Those are the only questions that we have for the witness at this time and we tender him for cross-examination.

HEARING OFFICER: Do you want Five and Six entered now as exhibits?

MR. KAUFMAN: I'm sorry. I certainly do.

[Cedar Exhibits No. 5 and 6 entered into evidence, appended hereto.]

[RECESS FROM 12:00 to 1:15 P.M.; COMMISSIONERS TEMPLE, TRAVIS AND BOYD IN ATTENDANCE.]

HEARING OFFICER: All right, George, let's proceed.

CROSS EXAMINATION

BY MR. WILLIAMSON:

Q. Mr. Dietrich, when did Vertac retain you to testify in this matter?

A. Approximately two weeks ago.

Q. You said you've testified on several--a few occasions before; is that right?

A. Yes.

Q. Have you generally testified on EPA's behalf in any---

A. On E---

Q. On the behalf of EPA any of those previous testimonies?

A. The testimonies that I made before Congress were on EPA's behalf.

Q. I mean since you left EPA.

A. No, I have not.

Q. That's all, sir. I just wanted to ask the question. You've told us that you spent one day with the company. On that one day that you spent with the company, is that the day you made the field trip to the plant?

A. No, sir. I made my field trip yesterday.

Q. Okay. So you've spent, what, two days?

A. Approximately two days, yes.

Court Reporters Supply House Style # 3-S

Q. Are those two days the total amount of time you've spent preparing for your testimony today?

A. I would say yesterday was a fairly long day. I would say I spent the equivalent of another three-quarters of a day in my office.

Q. During the preparation for your testimony today, did you have an opportunity to come to the Bureau of Pollution Control and examine our files?

A. I did not come here and examine your files. Apparently the counsel obtained some files and I reviewed the files they obtained from them.

Q. So is it fair to say the basis of your testimony is on documentation gathered at the Vertac Company?

A. Yes.

Q. Earlier you told us--showed us a diagram which is marked Vertac Exhibit 6. Do you recognize that, sir?

A. Yes.

Q. Furnished you by Vertac.

A. Yes.

Q. Now, I presume that the inputs and outputs on that diagram are the sole inputs and outputs upon which you base your calculations.

A. Yes, sir.

Q. I also believe you told the Commission that you assumed for the purpose of your calculations that the way

Court Reporters Supply House Style # 3-S

the plant is run today is the same as it had run--been run since the DNBP began to be manufactured, which I think is about '73.

A. I think that is a correct assumption. I basically assumed an average operation over that period of time. The plant today is not--is operated, at least with regard to run-off from these several areas, is operated differently than it was prior to November 1985, for instance. So I assumed the certain average operation over the 13-year period.

Q. You just extrapolated back then to the previous, what, 12 to 15 years?

A. Thirteen years.

Q. If there were other inputs or outputs on your diagram here shown on Exhibit 6, Vertac's Exhibit 6, would it be reasonable to assume that would change your conclusion?

A. It depends on what those inputs are. The inputs in the DNBP?

Q. Yes, sir.

A. That could change my analysis, yes.

Q. Could it or would it? Would it by necessity have to change it?

A. It depends on where those inputs are. I would have to examine exactly what inputs you're talking about.

Court Reporters Supply House Style # 3-S

Q. All right. Let me ask you this: Are you aware that in early 1983 that the pond shown on Exhibit 6, Vertac's Exhibit 6, there was a rupture of the dike at that facility?

A. I am aware of that.

Q. Did you include that, the loss of the materials that occurred in that rupture, in your calculations?

A. I basically assumed--

Q. Answer my question, sir. Did you include that rupture and the loss of the materials that occurred in that rupture in your calculations?

A. Yes, sir.

Q. You did?

A. Yes, sir.

Q. Show me on Exhibit, Vertac's Exhibit 6, where that is.

A. You could have--you obviously lost water. But that wouldn't affect the calculation that I came up with on that pathway. I assumed that you did not lose any sediment.

Q. Okay. So your assumption is that during the break, the dam break that occurred in early 1983, that you only had aqueous lost.

A. That's right.

Q. Could you tell us how much loss you've accounted for that?

Court Reporters Supply House Style # 3.S

A. For the aqueous lost?

Q. Yes, sir.

A. I basically assumed that all the water in the pond was lost.

Q. But you did take that into account; is that your testimony?

A. That is my testimony. I did take it into account.

Q. Okay. Could you tell the Commission, if you accounted for that, how many pounds were lost during that dam break?

A. Well it would have been several day's loss in the water pond which I calculated to be approximately 5 pounds a day. So I'd say about 15 pounds might have been lost.

Q. As I understood what you said, that--something along the line that it's not really sludge in that impound-ment, that it's something else. What were you saying at that point in time in your testimony?

A. It's basically soil washed off from the plant property which has DNBP absorbed onto it. It is not a sludge like we think of in a sewage treatment plant. It is not a highly organic material.

Q. So that the DNBP in the sludge occurs from run-off from the plant site?

A. Yes.

Q. If it occurs from run-off from the plant site how

Court Reporters Supply House Style # 3-S

can you tell the Commission here that it all comes from process de minimis losses?

A. I have no indication that there are any process wastes containing DNBP going into the pond. The only source of DNBP going into the pond is from run-off that is carried into the sewage that's collecting in the sewer system and drains into the pond.

Q. If I could at a later time show the Commission that there were other sources of DNBP going into that facility would that change your conclusions?

A. It may change my conclusions. I'm not sure it would change the final conclusion I came up with significantly.

Q. Didn't you tell the Commission that you got your layout here--as I understand, you said this is the way you decide if something is de minimis loss or not. If it meets this criteria then its de minimis loss; if it doesn't meet this criteria then it's not.

A. If it meets that criteria it is exempt as a hazardous waste, a hazardous waste unit, under the mixture rule provision that we are talking about.

Q. Okay. You heard Mr. King testify that carbon from the backwashing of the carbon filters goes to the impoundment. Do you recall that, sir?

A. Yes, sir.

Court Reporters Supply House Style # 3-S

Q. I want to ask you something: Under 3 here you say is this DNBP going into the pond produced in the "manufacturing operations" at the facility. Are you telling the Commission that carbon from the activated carbon treatment unit--that the carbon that's backwashed into the impoundment, that that's in the manufacturing operation?

A. Yes, sir.

Q. Mr. Dietrich, as I understood this Exhibit No. 4, this is Vertac's No. 4, that this says DNBP manufacturing operations. Is that correct, sir? I want you to show me on here where those carbon filters are.

MR. SMITH: If it please the Commission, I would like to interpose an objection at this time. This whole line of questioning is predicated on the assumption that the carbon backwash is a hazardous material. We contend it is not and until such time as George makes some kind of showing that it is then this line of questioning is irrelevant.

MR. WILLIAMSON: Gentlemen, Mr. King testified that in the backwash he could see the carbon. He testified that the backwash is only done when the filters are dirty. He testified that they lose X amount of pounds or it cost X amount of money every time they backwash them from losses of DNBP. That DNBP is definitely in those filters.

MR. SMITH: I don't think that's what the record reflects. But be that as it may, is it the contention of

Court Reporters Supply House Style # 3-S

counsel that it's the DNBP that's coming back out of the backwash that's the hazardous waste he's talking about.

MR. WILLIAMSON: I intend to put on testimony at a later time from the EPA that that's probably the case, yes.

MR. SMITH: That is probably the case. And that's just to the DNBP and not to the carbon?

MR. WILLIAMSON: That takes it out of the de minimis exception.

MR. SMITH: I understand; but we are talking about DNBP and not carbon.

MR. WILLIAMSON: The DNBP that's attached to the carbon.

HEARING OFFICER: Seems like the question that's trying to be established here is whether or not the origins of the DNBP that were attached to the carbon was generated from the manufacturing process or not. That seems to be the germane question. I think he needs to continue it, and the Commission can decide for themselves when they make their decision.

MR. SMITH: Yes, sir.

BY MR. WILLIAMSON:

Q. Mr. Dietrich, you told us that in order for the de minimis exception to apply that the DNBP going into the pond has to come from the manufacturing process. And then you told us that that carbon filter backwash is a manufacturing

Court Reporters Supply House Style # 3-S

process. Now I'm pointing to you to Exhibit 4 which is entitled, "Manufacturing Operations" and I want you to show me where the filters are.

A. They are not shown on Exhibit 4.

MR. WILLIAMSON: I want to make a request that Mr. Dietrich, Vertac's expert, says that the carbon filters are not shown on the "Manufacturing Operation."

HEARING OFFICER: I think you've established the point, George.

COMMISSIONER GOLDMAN: Could I make a comment at this time. I really think your business about the carbon as a de minimis. If you want to talk about it that way, argument--because as I understand the law, cleaning this equipment, so on and so forth, that is part of the manufacturing process. I don't know what we gain by spending this much time on that point. I'd like to go on with the case.

MR. WILLIAMSON: I'm going to present testimony later on that backwash from the filters--

COMMISSIONER GOLDMAN: Is not part of the manufacturing process?

MR. WILLIAMSON: That's right. And it does constitute the type of waste that would make this facility, the impoundment, to be a regulated hazardous waste facility.

COMMISSIONER TRAVIS: George, I think the point that Tom is making and I would also like to reinforce just

Court Reporters Supply House Style # 3-S

for your own thinking, the regulations themselves in giving examples of the types of things that are considered de minimis talks about rinsate and cleaning of personal safety equipment and rinse from the empty containers or from containers that are rendered empty by that rinsing. Now they don't speak specifically, obviously, about rinsing carbon filters, but--I'm thinking out loud now. I am not able to see what is the difference. Why rinsing carbon filters would not be a part of the manufacturing process. Maybe that doesn't get to the end of the line. It seems to me that at least in my judgment, from what I'm hearing so far, the argument you are making, if you are making or attempting to point this out, that rinsing the carbon filters is not a part of the manufacturing--is not a part of manufacturing operations does not appeal to me.

MR. WILLIAMSON: Well, I'm going to present some testimony from an EPA employee.

COMMISSIONER TRAVIS: Where they are going to say that they do consider that--that they do not consider this a part of the manufacturing operation?

MR. WILLIAMSON: That's right. They do not consider that to be the type of leakage or rinsing as you referred to it, that falls within the de minimis--

COMMISSIONER: GOLDMAN: Are you going to present testimony as to the amount of DNBP or whatever it is that's

Court Reporters Supply House Style # 3-S

getting into the system from that process?

MR. WILLIAMSON: Sir?

COMMISSIONER GOLDMAN: Are you going to tell us how much of the DNBP is getting in there because of that?

MR. WILLIAMSON: I can't tell you how much.

COMMISSIONER TRAVIS: Are you going to be able to refute then, George, the testimony of this expert witness on the amount, and I understand that he's using some--obviously he's used his own professional judgment, that's what an expert does, to determine that 6 pounds out of 10,000 pounds per day is being discharged into this holding pond. Do you have any evidence or do we have any evidence coming that will dispute these figures? You have not questioned him, as I understand, at this point about how he has arrived at these figures, really. You have not cross examined him.

MR. WILLIAMSON: I just pointed out that he had not--did not include his calculations that the pond has had a rupture, for instance. I'm going to continue. I'll ask him another couple of questions.

COMMISSIONER TRAVIS: Okay.

BY MR. WILLIAMSON:

Q. Now, Mr. Dietrich, in your calculations that you presented to the Commission did you include in those calculations the backwashing from the carbon unit?

A. The backwashing from the carbon--the answer is

Court Reporters Supply House Style # 3-S

yes. The backwashing from the carbon unit is really recycling the DNBP on this line right here. In other words, that chemical was taken out in the carbon. I've periodically washed the carbon. A very, very small amount of that carbon is washed into the pond. So I'm just recycling that chemical, so to speak. It has not changed my calculation whatsoever. It is not a new source of DNBP into the pond.

Q. Okay, and the fact that it comes from the carbon units still doesn't keep it--you're saying doesn't take it out of the manufacturing operation.

A. Not in my opinion.

Q. Any spills or leaks that occurred in that waste storage area that got to the impoundment, would that take the facility out from under the de minimis exception?

A. Well with regard to the returned product storage I believe that material in there is basically a raw material. It is DNBP returned that is either going to be reprocessed, i.e., it's a raw material for reprocessing or it is going to be repackaged. Therefore I think that enjoys the same distinction as the commercial product and therefore is a chemical covered under 261.33. With regard to the hazardous waste storage, it would be my opinion that leakage from there would not be included within the de minimis exception.

Q. Okay. Now--

A. If it went to the pond.

Court Reporters Supply House Style # 3-S

Q. I think you just said that any run-off that came from these sites--

A. No, any run-off that comes from the hazardous waste storage.

Q. This site, the hazardous waste storage. Can you come look at Exhibit 3 here and tell me where that is on Exhibit 3?

A. I hope so. I am as good at this one as you are. (Examining photograph). Basically over in here. There are two separate areas.

Q. Okay. Does run-off from these separate areas on Exhibit 3 shown as drum storage and return product storage, do those get to the impoundment?

A. From what I have been able to learn and from my official inspection of those areas, no. The run-off is not--from those areas does not go to the pond.

Q. Okay. Mr. King testified earlier that the drums used to be stored in what's called the dinoseb drumming area on Exhibit 3. Do you recall hearing that?

A. I recall hearing it, but I didn't understand it.

Q. Well, let's just assume that Mr. King knew what he was talking about.

MR. SMITH: I'm going to object because that question is predicated on a fact that's not in the record. The question was put to Mr. King, "Are the drums stored in

Court Reporters Supply House Style # 3-S

various portions of the plant?" Mr. King didn't isolate the hazardous waste storage area at that point.

MR. WILLIAMSON: I asked Mr. King where the drum storage area was prior to--he said it was moved in '83, as I recall, '82 or '83, from the dinoseb drumming area.

MR. SMITH: As a returned product, I believe he said.

BY MR. WILLIAMSON:

Q. Okay. Just for the record--I'm going to ask you a hypothetical question. Is the area now shown on the Exhibit 3 as the dinoseb drumming area, is that area in your understanding of that where surface run-off would reach the impoundment?

A. To my knowledge right now it would not reach it. Prior to November '85 drainage from that area would have gone to the impoundment.

Q. If the area, the dinoseb drumming area, did in fact contain drums having hazardous waste, then prior to '85, what you've just said, it would have gone to the impoundment.

A. That would be my finding of fact. Yes, sir.

Q. Would that then take this facility out from under what you have told the Commission is the de minimis exception?

A. If in fact there was drainage from that area in

Court Reporters Supply House Style # 3-S

the impoundment. I don't know whether there was.

Q. But if there was, the de minimis exception would no longer apply; is that what you're telling us?

MR. SMITH: Again, I am going to interpose an objection. The question is predicated on a fact that's not in the record. That is, that this area that George is pointing to is a hazardous waste storage area. That's not what Mr. King testified to. And to go into these hypothetical--stretch these regulations to the point that he's trying to do, is unfair to put this witness in that posture.

MR. WILLIAMSON: I've got a witness at a later date that inspected the facility and he's going to testify as to where he recalled the drums being.

HEARING OFFICER: We'll call Mr. Dietrich back after you present that and then you can ask him the question.

MR. WILLIAMSON: Okay.

BY MR. WILLIAMSON:

Q. Mr. Dietrich, you did some analysis over there and as I recall you said that the results you got--the concentrations you got were comparable to what the state got. Would you call those significant levels and that it therefore indicates what we would refer to as listing process might be appropriate in this case?

A. I'm not sure I understand the question.

Court Reporters Supply House Style # 3-S

Q. Okay. In the regulation that we've talked about there is an EPA preamble.

A. Yes.

Q. In that preamble it says that--let me just ask you.

MR. WILLIAMSON: Let me have it marked for identification.

[DOCUMENT MARKED EXHIBIT S-2 FOR IDENTIFICATION]

MR. KAUFMAN: May I inquire of counsel whether that's the entire preamble or just an excerpt.

MR. WILLIAMSON: Two pages of the seven pages.

MR. KAUFMAN: Would you mind making the entire preamble an Exhibit.

MR. WILLIAMSON: I don't mind.

BY MR. WILLIAMSON:

Q. I'll show you what's been marked as Exhibit S-2. Can you tell the Commission what that is?

A. That is the preamble to the amendments of the mixture rule that were promulgated on November 17, 1981.

Q. What is the preamble?

A. The preamble explains the amendment and typically explains EPA's rationale for promulgating the amendment.

Q. Is the preamble beneficial in interpreting the regulation?

Court Reporters Supply House Style # 3-S

A. It typically is beneficial in interpreting the regulation.

MR. WILLIAMSON: I would like to have this introduced into evidence.

[EXHIBIT S-2 ENTERED INTO EVIDENCE, APPENDED HERETO]

COMMISSIONER TRAVIS: George, do we have two pages of this preamble that you presented to the Commission this morning?

MR. WILLIAMSON: I'm not sure that it's been copied for your benefit.

HEARING OFFICER: This is what was passed out, I don't know if that's what you're referring to.

COMMISSIONER TRAVIS: That is what I'm referring to.

MR. WILLIAMSON: It's on the back of--

HEARING OFFICER: Is this what McNeal passed out to you?

MR. WILLIAMSON: It's on the second page.

COMMISSIONER TRAVIS: Do we have two of the seven pages?

MR. WILLIAMSON: Yeah. It would be the second and third page of what's been handed y'all. It starts up at the top "C. Mixtures of Wastewater and Discarded Commercial Chemical Products and Manufacturing Chemical Intermediates

Court Reporters Supply House Style # 3-S

Listed in 4o CFR 261.33."

COMMISSIONER TRAVIS: Are these two pages the two we need or is there something in the other seven?

MR. WILLIAMSON: I think those two, in my opinion, is all you need. They may not think so, I don't know.

BY MR. WILLIAMSON:

Q. Mr. Dietrich, looking at Exhibit S-2, and I'm looking in the second column of the preamble at the start of the first full paragraph which starts Section 261.3(a)(2)(iv)(D), and looking at the second sentence which is here. Would you mind reading that sentence to the Commission?

A. "By so restricting this amendment, the Agency believes it is limiting the mixture rule exemption to wastewater mixtures that contain very small concentrations of 261.33 materials and concentrations unlikely to pose a substantial hazard to human health and the environment."

Q. Okay. Would you consider DNBP to be the type of material referred to in that sentence you just read?

A. Yes.

Q. Okay. Do you consider--as I recall, the state said something--their date showed something like 4 to 8 parts per million of DNBP in that impoundment. Would you consider that to be a small concentration?

A. Did you say 4 parts per million?

Court Reporters Supply House Style # 3-S

Q. Four to eight is what I understand and I think you calculated 4.2.

A. Yes, I would consider that a small concentration.

Q. Do you consider DNBP to be an extremely toxic compound?

A. It's listed as an acutely toxic compound.

Q. It is?

A. Yes.

Q. Well, something that's acutely toxic, you don't think 4 parts per million is--poses a substantial health hazard?

A. Depends on where the 4 parts per million is. In a glass of drinking water it probably is; if it's in an impoundment it probably isn't.

Q. But you are aware that the impoundment had a rupture in '83?

A. I am.

Q. If another rupture of the impoundment occurred would that be the type of release that could be harmful to the environment?

A. Probably not. It would probably be diluted much, much below that. Certainly the rupture before there was no indication of any environmental impact. There was no fish kill.

Q. Are you aware that DNBP has been banned in the

Court Reporters Supply House Style # 3-S

State of Massachusetts?

A. I am not.

Q. You told us that the DNBP in the impoundment came from run-off at the plant and that's where the sludge came from; is that right?

A. Where the sediment came from.

Q. The sediment came from. Is it your proposition that those sediments all came from the manufacturing operation?

A. The sediments didn't come from the manufacturing operation. The DNBP on the sediments, I believe, came from de minimis losses from the manufacturing operation.

Q. Didn't you tell us that you found DNBP in the ground over there at least twelve inches below the surface?

A. I did.

Q. Do you think that DNBP can migrate twelve inches below the surface of the earth and still be from a de minimis operation?

A. Yes. If I spill a quarter of a glass of DNPB on the ground and it subsequently rains, some of that DNBP is going to be carried down into the soil.

Q. As I understood what Mr. King said, he said that the areas around the pumps and so forth were all very carefully concrete lined. Do you recall that?

A. I recall that.

Court Reporters Supply House Style # 3-S

Q. If it's so carefully concrete lined and engineered then how can you find DNBP twelve inches below the surface of the soil?

A. The DNBP is somehow washed off or been tracked off that concrete and found its way onto soil.

Q. And that that's washed off of the concrete by whatever means you're saying all of that comes from the manufacturing operation?

A. I believe so. I don't know where else it can come from.

Q. You told the Commission that there was no evidence of ground-water contamination; is that right?

A. I told them that, yes, in down-gradient wells.

Q. Have you looked at any up gradient wells?

A. I have looked at the data from the ground-water assessment program and that does report on some up gradient wells.

Q. Well, does it show contamination in the up-gradient wells?

A. It shows a well, monitoring a well No. 1, that does have, I believe, one--analysis of one part per million in that well.

Q. Well, is that contamination in the ground-water?

A. Contamination in the ground-water up-gradient from the pond. That amplifies--I mean, it indicated

Court Reporters Supply House Style # 3-S

contamination. I believe the state has asked Cedar Chemical to do some more assessment to determine whether that is in fact a contamination or not.

Q. I was just referring back to your testimony where you told the Commission there was no likelihood that the DNBP could get out of the impoundment into the ground-water. You told them furthermore that there was contamination in wells which were down-gradient.

A. I said I didn't think there would be any significant migration into the ground-water and that there was no indicated contamination in down-gradient wells.

Q. But there is indication of contamination in up-gradient wells?

A. There is indication of contamination in one up-gradient well.

Q. Okay. Mr. Dietrich, I've got one more question for you. If there are sources of DNBP, I'm looking at your number 3 on your Exhibit 1. If there are sources of DNBP going into the pond from other than manufacturing processes after November 19, 1980, would that mean that the de minimis exception would not apply to this facility?

A. That would not mean that. It depends on what those sources were. If the source was a wastewater that was not listed as a hazardous waste irrespective of whether it contained DNBP, that would not cause the impoundment to be a

Court Reporters Supply House Style # 3-S

hazardous waste.

Q. Would a wastewater stream that contained DNBP going into the impoundment after November 19, 1980, would that mean that de minimis exception would not apply to this facility?

A. Can I ask you to clarify the question? When you say wastewater stream, a processed wastewater stream?

Q. If it's a wastewater stream that, for instance, that is regulated by a NPDES permit and it had DNPB in it and it went into that impoundment after November 19, 1980.

A. Not unless that waste stream was listed as a hazardous waste in 261.31 or 32 of the regulations.

Q. And the fact that it contained DNBP would not necessarily mean it was listed; is that what you're saying?

A. That's what I'm saying. The fact that it contained DNBP would not mean whether or not it's listed. The listing operation is something that has to be specifically carried out by EPA or the State, and there's a whole set of criteria and rules for listing a particular waste.

Q. Mr. Dietrich, if at a later time I show that there are leakages from the drums storage area, would that be a wastewater stream or would that be a leakage?

A. You'll have to define the drum storage area better. I don't know whether you're talking about hazardous waste storage--

Court Reporters Supply House Style # 3-S

Q. Yes, hazardous waste storage.

A. If there is--would you restate the question for me.

Q. If I can show at a later date that leakages from the drum storage area were captured by the surface run-off that occurred on the site and went to the impoundment, would that mean that the de minimis exception did not apply to this facility?

MR. SMITH: This is the same objection that we interposed before. But for the sake of brevity because I know everybody's getting tired, if George could tell us if he's talking about the investigative reports on the spent carbon drums that he went to earlier, we may alleviate the necessity of calling the investigator to the stand and--

MR. WILLIAMSON: No, we can't alleviate that necessity because he is going to have to be called.

HEARING OFFICER: Let's do like before, you can call Mr. Dietrich back.

MR. WILLIAMSON: Can you let him answer the question?

HEARING OFFICER: Tell us what the leakage is so that he can answer the question based on the testimony, George.

BY MR. WILLIAMSON:

Q. If I am able to show that there's a leakage that

Court Reporters Supply House Style # 3-S

occurred from a hazardous drum storage area that could have been captured by the surface run-off and reached the impoundment, would that take this facility out from under the de minimis exception?

A. I am not sure because I believe the regulations can be read in two ways. The hazardous waste storage area you're talking about is a less than 90-day storage area. Therefore, it is not regulated as a treatment storage and disposal facility. I believe that it could be argued, and I don't know if EPA has ever interpreted this, that generators who operate 90--less than 90-day storage facilities, that those storage facilities are part of the manufacturing operation. If that argument is made and that interpretation is made, then I would say any leakage from that area would have the same effect as de minimis leakage. Any de minimis leakage from that area would have the same effect as de minimis leakage from other parts of the manufacturing operation and would not cause the impoundment to be a hazardous waste unit. You could obviously interpret it another way: That the 90-storage facility--thus a 90-day storage facility is not part of the manufacturing operation. So I really don't know how one would read the regulation on that. I don't think that is--has probably come up.

Q. But in your opinion would you yield to the conclusion of EPA on that point?

Court Reporters Supply House Style # 3-S

A. I would yield to the more practical conclusion that less than 90-day storage facilities are part of the manufacturing operation. That is in line with the statutory guidelines that we thought we were following when we were working with the de minimis regulation.

HEARING OFFICER: Does the Commission have any questions? Mr. Dietrich, just a moment, please. Does the Commission have any questions? All right.

Let me just remind both sides what you've asked the Commission to decide here today is--I know it evolves around some specific words in the law, but the issues aren't that complicated, I don't think, and we seem to be getting wrapped up too much in some of the trivia of this thing rather than the real issues about the degree of the material that goes in there and whether it comes out of the manufacturing process or not. Those seem to be the main issues, and I just caution you to try to stick to those things and let's move on. Okay, Mr. Dietrich, thank you. Go ahead. Proceed.

[WITNESS EXCUSED]

MR. MALONE: We only have one more witness and he will be very brief. It's Fred Ahlers and he is the plant manager.

FRED AHLERS,

having been previously sworn by the court reporter, was

Court Reporters Supply House Style # 3-S

examined and testified on his oath as follows, to-wit:

DIRECT EXAMINATION

BY MR. SMITH:

Q. State your full name, please.

A. I'm Fred Ahlers.

Q. Where are you presently employed and in what capacity?

A. I'm the plant manager at Cedar Chemical, Vicksburg Chemical.

Q. How long have you been employed there, Fred?

A. Since August 15, 1976.

Q. At that time you were employed by Vicksburg Chemical Company?

A. That's right.

Q. And then subsequently you've serve in the same job for Vertac and now Cedar; is that correct?

A. Vertac and Cedar.

Q. What, just in a general way, are your responsibilities as plant manager?

A. Well, very briefly, I'm responsible for the total performance of the facility. In order to accomplish this I have, along with Sonny King, who is a department head, I have four other department heads. One is a maintenance manager, one is a technical manager, and another is the plant administrative manager, and I have a warehouse

Court Reporters Supply House Style # 3-S

purchasing and traffic manager.

Q. And all these people report to you; is that correct?

A. That's right.

Q. How many people are employed at the plant total?

A. On payroll 158.

Q. Now you understand, do you not, that if there is a determination that this pond which is the subject of this hearing is determined to be within RECLA it must be closed?

A. That's right.

Q. And therefore, have you looked at what it would take to close that facility?

A. You mean in money?

Q. Well, in terms of what you would do and how much it would cost to do it.

A. Well, first of all, in order--if we have to shut the pond down we must have an alternate facility or facilities in order to take the place--to handle this three and half million gallons of volume. We have not had a definitive study on this--what this would cost; but I've heard ranges of somewhere between in a low one million up to four million for this type of change. The big thing is we have to get a definitive engineering estimate as to what has to be done. But the big thing is how to do it. We would have to operate the facility in some way while the pond was being

Court Reporters Supply House Style # 3-S

closed. It's like working on a highway, you have to have a crossover while you work on one section of the highway. So the logistics of that would have to be worked out in some detail.

Q. This one to four million dollars, is that construction of an alternate facility to replace the pond?

A. That would be construction of alternate facilities to replace the pond.

Q. Well, how would you go about actually closing the pond without regard to how you would construct alternate facilities, if you know?

A. Well, the closing of the pond, as we had looked at it, we would get the--dewater the pond, keep the sediment in place and cap it and then monitor it. And we had gotten a rough estimate of about a million and a half dollars to do that.

Q. So you are talking about anywhere from two and a half to roughly, what, five, five and a half million dollars for the total job.

A. And, again, we don't have--as I mentioned, we don't have a definitive estimate on the alternate facilities because we--although we have a conceptual plan of possibly putting a tankage in, at this particular time we have no definitive engineering estimate.

Q. Just a couple of other things. You mentioned the

Court Reporters Supply House Style # 3-S

fact that if you took the pond out of service--closed it, you would be required to put in alternate facilities. Would you just explain briefly to the Commission what purpose this pond is presently serving and why it is that if you're going to continue to operate the plant you even need that pond or these alternate facilities we're talking about. What function does that pond serve?

A. Sonny Keen touched upon it, but I'll repeat it. It's really three-fold. One is that it takes care of any PH's that could occur from the nonhazardous inorganic effluent that comes out of the north plant, which incidentally, is our most profitable plant. If this--this is the plant that is really the fly-wheel of the whole company.

Q. Now let me stop you and ask you how--be more specific and explain to the Commission how that operates. You're saying effluent is coming out of the north plant and sometimes goes into that pond we're talking about today. How does that happen and when does it happen and why does it happen?

A. Okay. We have a NPDES permit, of course, to discharge the neutralized effluent into the Mississippi, but when the--that's when the PH is between six and nine. What we have is we put tighter restrictions on it so that in case it is lower than seven and a half, outside the seven and a half to nine range, it will automatically divert it to the

Court Reporters Supply House Style # 3-S

south pond, and therefore it can be adjusted and then sent to the carbon beds and into the river.

Q. So you are pumping both directions: To the carbon beds as well as from the ponds into the carbon beds.

A. That's correct.

Q. What are the functions, if any, does the pond serve?

A. The other function, of course, is to act to take care of that watershed that Sonny reminded us of earlier. We've got about 24 acres of surface water that the pond would pick up. And then the third use: Fortunately, we have not had to use this but it's like--a kind of safety net, because should we have a major type of accident, why, that's the only thing there that will prevent the effluent from getting into the bayous and eventually into the Mississippi. I even looked at if we had tanks there--of course, with a tank you've got to have pumping systems. You've got-- everything is above ground. And the elevations could cause a problem even--as I mentioned before we looked at this type of an alternate to this particular pond. So this is really a safety net. Fortunately, we haven't had to use it as yet.

Q. Mr. Ahlers, do you have unlimited funds at your disposal to spend on projects like this, capital expenditures of this magnitude?

Court Reporters Supply House Style # 3-S

A. That almost sounds like a dream, but we don't, obviously. The farm economy is pretty bad, as most of us know, and we do not have just ample funds to--we have to watch what we do with our money like most companies today in this economy.

Q. Do you know--or do you have sort of a gag point that you could reach, or if you know, beyond which you simply couldn't afford to continue to operate the plant? You I say, the owners of the plant.

A. No. I really don't. But I'm sure that, you know, my bosses and the owners do have some point, but I do not know what that is.

Q. Let me just ask you one other question. If it is determined that this is not a regulated unit under RCRA there has been testimony about monitoring wells--you've heard that--around the pond, the monitoring of ground-water around the pond. In the event there is a determination that you're not covered and this is not a regulated RCRA unit, what is the company's intention with regard to future monitoring and analysis of those wells?

A. We're already committed to that. We will continue to monitor the wells. As was alluded to before, we had the one monitored well that obviously had shown some contamination up-gradient. We don't know why, we don't know why. We've had a consultant in to help us determine this, but

Court Reporters Supply House Style # 3-S

we're going to put in--committed to put in some wells to determine whether there's a plumb or not, whether it's point source. And then, in addition, we would have to maintain, as we have, the levee with a dike with inspection and whatever necessary maintenance is required.

Q. Now this is the dike that was installed three years ago?

A. That's right.

Q. And how frequently do you inspect that dike?

A. Well, the dike is inspected daily by our effluent operators.

MR. SMITH: I have no further questions.

HEARING OFFICER: George.

CROSS EXAMINATION

BY MR. WILLIAMSON:

Q. Mr. Ahlers, I think the Commission has made it clear they'd like to get to the heart of the issue so I will attempt to do that. Are you aware of any source of DNBP that could go to the impoundment from other than the process itself that have occurred throughout the history of that plant over there?

A. I am not aware of that, no.

Q. Mr. Ahlers, what about any waste streams that would be covered by the NPDES permit getting into that impoundment, are you aware of any of those?

Court Reporters Supply House Style # 3-S

A. We--are you talking about the water that--the wash-water that previously went into the pond?

Q. Is it only wash-water that went into the pond from the carbon filters? Did the filters themselves ever go directly into the pond?

MR. SMITH: Do you mean the filters themselves?

BY MR. WILLIAMSON:

Q. Does the discharge from the filters themselves ever go directly into the pond?

A. I don't recall that, because when I came aboard the carbon filters were put in and they were used as a final filter approach before the effluent went into the Mississippi.

Q. When did you come aboard over there?

A. I came in August of 1976. I was in the process of moving. I replaced my predecessor.

Q. So your testimony is that the carbon filters always followed the ponds in the treatment process.

A. That's to the best of my memory.

MR. WILLIAMSON: I would like to have this marked as an exhibit.

[DOCUMENT ENTERED AS EXHIBIT S-3, APPENDED HERETO.]

MR. KAUFMAN: There's no date on this; can you tell me when this document was prepared?

Court Reporters Supply House Style # 3-S

MR. WILLIAMSON: I can tell you it was about 1975.

MR. KAUFMAN: Before Mr. Ahlers came to the plant?

MR. WILLIAMSON: The date on that document may be before, then, but the process was in operation.

THE WITNESS: That process was not in operation.

BY MR. WILLIAMSON:

Q. Can you identify that?

A. This is the first time I've seen this.

MR. KAUFMAN: Why don't you identify it for him, Mr. Williamson, if he didn't prepare it and doesn't know what it is.

BY MR. WILLIAMSON:

Q. Mr. Ahlers, at the top it says, "Vicksburg Chemical Company Effluent Treatment Process" and under product type it's got dinoseb and it says primary treatment's got activated carbon chemical removal, and then for secondary treatment it's got the settling pond, final neutralization and settling pond.

A. This is a schematic. Was this actually done? This I do not recall, but it doesn't matter. When I came we pumped--we put in the necessary pumping so that we pumped from the pond through the carbon filters and then we put a $40,000 caustic pump in. That's what I recall.

Q. Mr. Ahlers, are you familiar with where the drum storage areas that would have contained hazardous waste,

Court Reporters Supply House Style # 3-S

where they have been at Vertac since you've been there?

A. Not really. We have had areas where we've kept some drums of finished product, and we've had some drums that we've gathered to dispose off-site, and we have--I believe we put--a few years back we had some drums on this concrete pad before they were shipped outside the plant.

Q. What were in those drums?

A. I don't recall specifically.

Q. Would that have been hazardous waste?

A. I don't know. It's a concreted area and if it had any dinoseb it would show up yellow. It is thick and it colors practically everything.

Q. I'm not sure, but did you tell me that you really don't know the history of the drums there, the hazardous waste storage drums? Is that what you're saying?

A. The only thing that I--I am not involved in the day-to-day detail. The only thing that I'm involved in is making sure that the policies which the company invokes is taken care of. And it's been our policy to try to get these things out when we get a truckload of material that has to be shipped out, get them out and get them out expeditiously.

MR. WILLIAMSON: Okay, Mr. Ahlers, that's all I've got.

HEARING OFFICER: Wait just a moment, Mr. Ahlers. Does the Commission have any questions?

Court Reporters Supply House Style # 3-S

BY COMMISSIONER GOLDMAN:

Q. In your opinion is your plant efficiently run or sloppily run as far as your waste?

A. I've been in this business for 35 years and I've been in a number of chemical plants, and I would rank our plant as a well run--of course I'm prejudiced--a well run operation. The unfortunate part is that the material that we make, dinoseb, as I just mentioned a half part per million will discolor the world essentially and it really looks like the devil if you get a drop on the ground, and it's not something that can be cleaned up readily. If someone has a spill it is noticeable. It's not something you can cover up, and that's--in one respect it's good, in another respect it's bad because it does look awful from the yellow color. But it's very difficult to get that color away from there. The soil had some colored spots when I first came there in '76. I think it's a well run operation and I think our training program shows that. We've got some of the best people that I've ever had the pleasure of working with at the Vicksburg facility. They are well trained, and if we've had problems we get them straightened out, and, as I said, it's a group of people that is really dedicated to the work effort unlike some of the areas I've been in.

Q. Have you made any corporate decisions as to how

Court Reporters Supply House Style # 3-S

long you can safely maintain that impoundment and utilize it?

A. Well, as Allen has before--you know, we would like to keep the impoundment because we think it serves a very vital part to the operation of that facility. We think that to get rid of it will cause some not only financial problems but other problems which could affect the environment. Without that pond we would have the--be hard pressed, I think, to handle any--any large type of a spill or a problem. This is, as I said before, is a safety net.

Q. Is it your position that you can safely use that impoundment indefinitely?

A. I feel that.

HEARING OFFICER: Any further questions by the Commission? Do you have any further redirect.

MR. SMITH No, I don't.

HEARING OFFICER: All right. You're excused.

[WITNESS EXCUSED]

MR. SMITH: At this time the movant will rest our case. We do have other witnesses available, depending on what evidence the State puts on in rebuttal. This concludes our direct. The movant rests.

[MOVANT RESTS]

HEARING OFFICER: George.

MR. WILLIAMSON: I need about five minutes.

Court Reporters Supply House Style # 3-S

(Recess from 2:20 to 2:30 p.m.)

MR. WILLIAMSON: I want to call Mr. David Lee.

DIRECT EXAMINATION

DAVID LEE,

having been previously sworn by the court reporter, was examined and testified on his oath as follows, to-wit:

BY MR. WILLIAMSON:

Q. State your name for the record, please, sir.

A. My name's David Lee.

Q. What do you do for a living?

A. Presently a hydrologist, Bureau of Land and Water Resources, in this agency.

Q. Where did you work before that?

A. Before that, I was employed in the Hazardous Waste Section of the Bureau of Pollution Control.

Q. For what period of time were you so employed in the Hazardous Waste Section?

A. Approximately eight years.

Q. What beginning date and what ending date?

A. Ending date was November of last year, '85; beginning date was 1978, '77.

Q. What kind of education do you have?

A. I have a Bachelor's Degree in biological engineering with a Master's in business administration. I have some graduate work in sanitary engineering.

Court Reporters Supply House Style # 3-S

Q. Did you say that you worked in Hazardous Waste Section for eight years?

A. Yes, sir.

Q. Did you ever have an occasion to perform a field investigation at Vertac Chemical?

A. Yes, I did.

Q. I want to show you what's been marked into evidence as Exhibit S-1. Do you recognize that?

A. Yes.

Q. What is it?

A. It's an inspection report that I completed.

Q. What was the date of that report?

A. July 27, 1981.

Q. What did you do during that field investigation?

A. This was an inspection to determine the facility's compliance with hazardous waste regulations. We inspected all areas of the plant site that might have been subject to these regulations.

Q. Did you, as part of the investigation embodied in Exhibit S-1, did you have the chance or the opportunity to look at areas of Vertac Chemical Corporation where drums were stored which contained hazardous waste materials?

A. Yes.

Q. Mr. Lee, I am going to ask you to come up here and look at what is marked as Vertac Exhibit 3, which is a

Court Reporters Supply House Style # 3-S

photograph, and ask you to look at Vertac's Exhibit 3 and ask you to tell the Commission where the drum storage area that contained those hazardous wastes shown in the report marked Exhibit S-1 is.

A. Since I went to the plant there have been some units added. It changes the scenery somewhat. The area that I recalled them being was somewhere within the range from--looks like this is a cooling tower. Possibly from the edge of where this unit presently is to somewhere within this area. (Indicating) Not meaning it to cover the entire area, but somewhere contained within that area.

Q. Do you recall Mr. King testifying that prior to '82 the drums were contained in what's call the dinoseb drumming area? Would that be an area of approximately where you've pointed to?

A. It would be within that area, yes.

Q. Looking back at--that's all I have with the photograph. Looking back at your inspection report marked Exhibit S-1, did you make any comments on your observations which you made in the field in July of '81?

A. I just made some comments about numerous drums that were contained on the site, the plant site, many of which were in a badly deteriorated condition. Some were leaking.

Q. About how many drums did you see out there?

Court Reporters Supply House Style # 3-S

A. I noted on the report about 700, approximately.

Q. Explain to the Commission, if you can using some sort of words and indicate physical size, about how big an area did it take to store 700 drums.

A. The drums were stacked. It look less area than it might have singlely stacked. It took an area of, oh, probably a couple times the size of this room.

Q. Were the drums on the concrete pad or were some of them off the concrete pad?

A. Some on and some off.

Q. Did you make any notation about any liquids coming from the drums or the condition of the drums?

A. I noted that there was some material, as I worded it, oozing out of some of the drums.

Q. Mr. King said earlier that the carbon came in cardboard boxes or bags. Would material in cardboard boxes or bags eat through a metal drum if it was just carbon?

A. No, not if it was just carbon.

Q. If it contained hazardous waste it would though, wouldn't it?

A. It could.

Q. Did you make any notations about the conditions of the drums?

A. Just that they were in advanced deteriorated state.

Court Reporters Supply House Style # 3-S

MR. WILLIAMSON: Let's mark this as State's Exhibit, whatever number we're on.

[DOCUMENT MARKED EXHIBIT S-4 FOR IDENTIFICATION]

BY MR. WILLIAMSON:

Q. Mr. Lee, one other question: What was the date of that inspection?

A. July '81.

Q. Following that inspection did you make any kind of follow up report to the company?

A. Yes, I sent them a letter.

Q. I want to ask you and show what's been marked as Exhibit S-4 and ask you to identify that.

A. This is the letter I sent them dated August 10, '81, explaining the violations and requiring them to remedy many of those violations and giving a time period of thirty days for recontainerization of the drums.

Q. Did you--what's the date of that letter?

A. August 10.

MR. WILLIAMSON: Do y'all have any objection to my introducing this into the record?

MR. SMITH: We don't have any objection, George.

[EXHIBIT S-4 ENTERED INTO EVIDENCE, APPENDED HERETO]

BY MR. WILLIAMSON:

Court Reporters Supply House Style # 3-S

Q. Mr. Lee, in the letter that's marked Exhibit S-4 did you make any comments about the condition of the drums?

A. I commented that several drums were leaking and others were in bad condition.

Q. Did you make any other comments about the leaking drums in the body of the letter?

A. Yes. I commented that deteriorated drums leaking are considered a major violation and must be corrected immediately. I gave them thirty days to either recontainerize or properly dispose of the material.

Q. In your estimation as a field inspector did you consider the leaking nature of the drums to be a serious problem?

A. Yes.

Q. Did it look to you like that those drums that were leaking were resulting from a plant process stream?

MR. SMITH: I'm going to object to that. This calls for rank speculation on the part of this witness.

BY MR. WILLIAMSON:

Q. Are you aware of what a processing plant is all about, Mr. Lee, from inspecting around the State?

A. I'm familiar with process versus waste.

Q. Did those drums look like process or waste?

A. They looked like waste.

Q. Would you have considered them to be a sloppy

Court Reporters Supply House Style # 3-S

operation or a well run and neat operation?

A. As of the date of the inspection it was a sloppy operation.

Q. Did it look to you like all of these wastes that were leaking from the containers--did it all appear to you to be contained on the site, or if run-off, a rain storm had occurred, could it have gotten caught up into the run-off?

A. I saw nothing that could contain material in the immediate area where the drums were stored.

Q. Were the drums in any kind of diked area? Were they contained in any sort of depressed concrete basin that had some sort of concrete lining around them?

A. No.

MR. WILLIAMSON: That's all I've got.

CROSS EXAMINATION

BY MR. SMITH:

Q. How many times did you inspect Vertac, Vicksburg Chemical, and Cedar in your career?

A. Did I inspect it? How many? I don't recall the number of those.

Q. More than one occasion?

A. Yes.

Q. I assume by virtue of the fact that George is discussing with us one inspection report, this is the only one that--in which you--

Court Reporters Supply House Style # 3-S

MR. WILLIAMSON: I'm going to object to the form of that question. That's an improper question. There's no reason for him to assume what is in my mind.

MR. SMITH: I'll rephrase the question.

BY MR. SMITH:

Q. Did you ever see in any of your other inspections any evidence of hazardous waste improperly disposed of on that site?

A. On the entire plant site?

Q. The south plant site, the one we're talking about today.

A. There was evidence of past disposal at the old landfill site near the impoundments that appeared to have been not properly disposed of.

Q. They tell me the magic date of the RCRA was November 19, 1980. Did you see any evidence of improper storage of hazardous waste at this site after November 19, 1980? If it occurred after November 19, 1980.

A. As far as deteriorated drums and leaking and that sort of material this was the only occasion that I recall.

Q. All right. So in your inspection report, when George made the--asked the question predicated on the fact that there were hazardous waste storage in this area you pointed out up there, am I correct in assuming that the only hazardous waste storage you're talking about were these 700

Court Reporters Supply House Style # 3-S

drums that you make mention in this inspection report? Is that correct?

A. Yes.

Q. Did you do any type analysis of the contents of those drums?

A. No, I did not.

Q. I see that you say that it was--that the drums contained carbon; is that correct?

A. That's what the plant chemist had told me.

Q. Do you have any idea whether it was spent carbon or activated carbon?

A. The chemist told me that it was spent carbon. There was no reason for me to believe that brand new carbon would be stored in that fashion or have material oozing out of it.

Q. You really don't know, is what you're telling me, whether it was spent or clean of your own personal knowledge.

A. It's based on what the chemist had told me.

Q. But you didn't do any independent evaluation or analysis?

A. No.

Q. So when George asked the question earlier about if in fact there was stored hazardous waste in this area you really don't know whether those drums contained hazardous

Court Reporters Supply House Style # 3-S

waste or not, do you, David?

A. Not based on a sampling, no.

Q. And in fact, the only knowledge you have as to whether or not they contained hazardous waste is what you've put in the report, and that is, there was oozing a dark liquid. Isn't that correct?

A. Right.

Q. So solely on that basis you're going to testify to this Commission today that there was hazardous waste stored in that area, or would it be more proper to say that you really don't know, David, whether or not hazardous waste was stored in the area?

A. I was basing my evaluation on the plant chemist.

Q. Well let's--we'll come back to that. But my point is: That of your own personal knowledge you have no idea whether or not there was hazardous waste stored in the area you've just depicted in your direct examination, do you, David?

A. No. That's correct.

Q. Are you aware of the fact that this operation--this product DNBP, was in fact was originally developed as a commercial dye?

A. No.

Q. You stated earlier that you thought it was a sloppy operation. Is that what you said?

Court Reporters Supply House Style # 3-S

A. (Nods)

Q. Was that predicated solely on these 700 drums of carbon that you discuss in your report or was that predicated on something else?

A. That's predicated on the 700 drums and the general feeling that I got from that area, plus observing the old landfill area, which as I said was not regulated under RCRA.

Q. And that's the sole basis upon which you make your determination that this is "a sloppy operation"?

A. When I said sloppy I was referring to the waste storage and disposal, not the general manufacturing operation.

Q. Okay. So you're not saying that the Vertac operation in and of itself is a sloppy operation, you were just saying at those two points it looked sloppy to you. One last thing--the two areas.

A. Right.

Q. David, you really don't know whether any of the material that oozed from these 700 drums ever worked its way to the surface impoundment, do you?

A. No, I don't.

Q. And you don't have any direct evidence of the discharge into that surface impoundment of DNBP, do you?

A. I would say from the appearance of the impoundment there was evidence that material had been discharged.

Court Reporters Supply House Style # 3-S

Whether it came from run-off or from the carbon I don't--

Q. Or from the manufacturing operation. You just don't have any idea.

A. No. It's possible.

MR. SMITH: I think that's all we have.

HEARING OFFICER: Does the Commission have any questions?

MR. WILLIAMSON: I have a few additional questions.

HEARING OFFICER: All right. Proceed.

REDIRECT EXAMINATION

BY MR. WILLIAMSON:

Q. David, when you would make your field trips to Vertac, or any other company, how did you know where to go at the facility, where to go look at the hazardous waste storage area?

A. I'd normally contact the person in charge of that part of the facility and they would guide me to the site.

Q. So is that what would have happened on this particular day, the chemist or some other person took you to this site? Did those people accompany you at other times?

A. Yes.

Q. So they knew that you weren't there to look at the process stream.

A. Right.

Court Reporters Supply House Style # 3-S

Q. Did you ever inspect the process stream?

A. No.

Q. Was that part of your job to inspect the process stream?

A. No.

Q. Did the plant chemist know that that wasn't part of your job?

A. I think he knew that.

Q. Here on this report it says under Requirement on the left, it says--read that entry.

A. "Containers holding hazardous waste must be kept closed and must not be opened, handled or stored in a manner which may cause a rupture or leak."

Q. Does it use the term "hazardous waste"?

A. Yes.

Q. Did the chemist tell you that it wasn't hazardous waste?

A. No.

Q. Do you happen to know if Vertac was ever furnished a copy of this report?

A. A copy was sent with the letter that was referred to earlier.

Q. Mr. Lee, I want to refer you back to Exhibit S-4, which is a transmittal letter, the first page of that, and ask you to read the last sentence of that letter.

Court Reporters Supply House Style # 3-S

A. "Enclosed is a copy of the inspection report."

Q. Do you recall ever getting any rebuttal or reply from Vertac that these drums that you've listed here under hazardous waste were not hazardous waste?

A. No.

MR WILLIAMSON That's all I've got.

HEARING OFFICER: Do you have any recross?

MR. SMITH: I do have just a couple of questions, if I could. Part of it stems from not hearing the last questions. I want to make sure where we are.

RECROSS EXAMINATION

BY MR. SMITH:

Q. You don't have any idea whether or not that was hazardous waste or not in those drums; is that correct?

A. That's correct.

Q. Now, it looks to me like from looking at these letters that instead of enforcement action you sent a letter and asked these people to clean that point up that's in those drums and that they did. Is that correct?

A. Yes.

MR. SMITH: We have nothing further.

MR. WILLIAMSON: I've got one more question. Kay, mark this. Gentlemen, I'm sorry that this takes so long, but we have to make a record because any appeal's going to be strictly on the record, and I'm sorry that the law is

Court Reporters Supply House Style # 3-S

that way, but that's the way it is.

[DOCUMENT MARKED EXHIBIT NO. S-5 FOR IDENTIFICATION]

FURTHER REDIRECT EXAMINATION

BY MR. WILLIAMSON:

Q. Mr. Lee, I want to ask what's been marked as Exhibit S-5 for identification purposes--see if you can tell me what that is.

A. It appears to be a copy of an aerial photograph of the plant site.

MR. WILLIAMSON: Do you have any objection to introducing this into evidence?

MR. SMITH: No.

[EXHIBIT S-5 ENTERED INTO EVIDENCE, APPENDED HERETO]

BY MR. WILLIAMSON:

Q. Mr. Lee, on that exhibit there is an area outlined in black ink. Based on the area that's outlined in black ink on Exhibit S-5 and your previous testimony of where the drum storage area that you saw on the date of your inspection on Vertac Exhibit 3, can you draw any conclusion as to whether or not the drum storage area you inspected in July of '81 is within the black lined area on Exhibit S-5 which you have in your hand?

A. I'd say it would be within that area, yes.

Court Reporters Supply House Style # 3-S

MR. WILLIAMSON: Okay. That's all I've got.

FURTHER RECROSS EXAMINATION

BY MR. SMITH:

Q. Who was the chemist? Do you recall, David?

A. Bob Maraman.

HEARING OFFICER: Anything else, Bill?

MR. SMITH: No, sir.

HEARING OFFICER: You're excused.

[WITNESS EXCUSED]

MR. WILLIAMSON: I'm going to call Jerry Cain.

JERRY CAIN,

having first been duly sworn by the court reporter, was examined and testified on his oath as follows, to-wit:

MR. SMITH: Just for the record I'm going to have to interpose an objection. We asked, pursuant to the regs.--I thought we were entitled to a list of witnesses to be called in this case. I was given three names, and we've already gone past it with the first one and now we are going past it with the second one. I'd like the record to reflect that.

MR. WILLIAMSON: For the record, I want the record to reflect that this morning when the witnesses stood to be sworn, all of those witnesses stood up to be sworn on behalf of the State. No witnesses have been used with the exception of Jerry Cain which were not in the group that stood up

Court Reporters Supply House Style # 3-S

this morning.

HEARING OFFICER: Okay. You've both made your points.

DIRECT EXAMINATION

BY MR. WILLIAMSON:

Q. State your name for the record, please, sir.

A. Jerry Cain.

Q. What do you do for a living?

A. I'm a coordinator with the Industrial Wastewater Section, Bureau of Pollution Control.

Q. How long have you been doing that?

A. I've been coordinator of the section for a little better than a year.

Q. Okay. What did you do before that?

A. Before that I was assistant coordinator for about four and one-half years and before that I was a project engineer. I've been with the State about eight years.

Q. And how long have you been with the Bureau of Pollution Control?

A. Eight years.

Q. Have you worked in the Industrial Wastewater Section during that time?

A. The entire time, yes.

Q. What kind of educational background do you have?

A. I have a B.S. Degree in Sanitary Engineering and a

Court Reporters Supply House Style # 3-S

Masters of Science and Environmental Engineering.

Q. Are you familiar with Vertac Chemical Corporation?

A. Yes.

Q. How are you familiar with them?

A. Through review of other's work in their regulation of the facility, review of their files, and one plant inspection I made at the facility.

Q. Do you work in the hazardous waste area?

A. No.

Q. What area of regulation do you work in on behalf of the Bureau?

A. Industrial wastewater in regard to NPDES discharges as it applies to Vertac.

Q. Are you familiar with the file that Vertac Chemical Corporation maintains in the NPDES permit section?

A. Yes.

Q. Would that file be maintained by the section over which you--that you are now the coordinator of?

A. Yes.

Q. Are you familiar with the NPDES permits and the treatment processes of their various waste streams at Vertac Corporation?

A. Yes, somewhat.

[DOCUMENTS MARKED EXHIBIT S-6 AND S-7 FOR IDENTIFICATION]

Court Reporters Supply House Style # 3-S

MR. SMITH: I'm going to interpose an objection, a strong one, at this point. The regulations for this department provide in hearings of this type that we're entitled to have access to documents that are going to be used in hearings of this type. We made a formal document request. Chuck Estes was very gracious in complying with that by giving us access to certain files. These documents were not contained in those files. I think these come out of an old totally separate section that's been attempted to use in this hearing that weren't given to us prior to the time of the hearing. In addition to that, obviously, this is the first time I've seen them, and I would like to spend a little time with my people if I could evaluating them.

HEARING OFFICER: Mr. Chairman, I suggest that we recess the hearing to another date to allow them time to do that. They were unaware that these were going to be introduced.

MR. SMITH: I'm not sure if I take a break that--absolutely that's detrimental to the action that's in front of me--I'm just a little--

HEARING OFFICER: I'm not talking about recessing it for just a few minutes, I'm talking about recessing and finishing at another date. It would appear to me--

MR. SMITH: The only problem we have with that is that under the consent order that we agreed to, we've got to

Court Reporters Supply House Style # 3-S

get a resolution of this issue basically prior to October 1st unless we can move those dates back correspondingly. We've agreed with Charles, given our word and also entered a consent decree that if we were to not prevail in this action we've got to file some very expensive reporting requirements by October 1st, and if I could get Charles to agree with me to move those dates along, then that date--

MR. MALONE: May I just suggest that I don't--I hate to bring this Commission back, and I know it's an imposition and I think we would only need a very few minutes to discuss with the author of the letter, I mean, we've wanted the opportunity to do that before this hearing so we wouldn't have to--

HEARING OFFICER: Let me ask, George, is there any more documents going to come up here that these folks have not been provided? Let's do it all at one time.

MR. WILLIAMSON: In response to his original objection, I'd like to state for the record that all of these are public records. He had plenty of access to them, and there was never a request made to the Attorney General's office for any documents.

HEARING OFFICER: All right. Let's--

MR. WILLIAMSON: They may have requested from Chuck but I'm not aware of it.

HEARING OFFICER: Let's don't lose track of what

Court Reporters Supply House Style # 3-S

we're here about. The Commission's been asked to decide an issue and they need whatever all information that needs to be made available to make that, and I know that the record has to stand by itself it it's appealed; but, nevertheless, we want to be fair to both sides and--

MR. SMITH: For the sake of moving along, I would make this suggestion, if I could, that perhaps we just go forward with the examination. If the Commission would reserve ruling on the introduction of these documents into the record after the direct testimony is over with, perhaps we could then get about five minutes to sit down with the author of these documents and discuss them so that we could intelligently cross examine this witness.

HEARING OFFICER I don't see why we don't take that little time right now, Take it now or take it later. If we take a ten minute break would that be sufficient?

MR. SMITH: And there are no other documents?

MR. WILLIAMSON: I'd like to make a statement for the record on that. There's no way in a hearing of this nature I can anticipate what the witnesses are going to say because I--there's no discovery in administrative proceedings. I never deposed any of their witnesses. I don't know what they are going to say when they get up there on the stand. I can only listen to what they say and then respond to it, because there is no formal discovery. So, no, I

Court Reporters Supply House Style # 3-S

cannot give them every document which I intend to use for the continuation of this hearing. It's impossible. And there is no requirement that that be done under the laws of the State of Mississippi.

HEARING OFFICER: Let's take a 10 minute recess.

[RECESS FROM 3:05 TO 3:15 P.M.]

MR. WILLIAMSON: If it please the Commission, we had stopped so that Vertac could examine two documents. Do y'all have any objection to introducing these into evidence?

MR. SMITH: We will make an objection for the record. We did make this formal request that we mentioned earlier. These documents were not given to us, and on that basis we object to the introduction.

HEARING OFFICER: It's in the record.

[EXHIBIT S-6 AND S-7 ENTERED INTO EVIDENCE, APPENDED HERETO.]

HEARING OFFICER: Go ahead.

BY MR. WILLIAMSON:

Q. Mr. Cain, I show you what's been marked Exhibit S-6 and Exhibit S-7. They've already been entered into evidence. Can you tell the Commission what those are?

A. S-6 is a letter from Vertac to Steve Spengler who is an industrial engineer--environmental engineer in the Industrial Section. It's dated March 9, 1983.

The second exhibit, S-7, is a wastewater treatment

schematic that was effective as of September 13, 1979, describing Vertac's flow process.

Q. Are Exhibits S-6 and S-7 documents from the files of the section for which you are a coordinator?

A. Yes. The Industrial Wastewater Control.

Q. Have you had a chance to review those documents prior to this point in time?

A. Yes.

Q. What is the relevance of Exhibit S-6 to the treatment of DNBP at Vertac Chemical Corporation?

A. Vertac is communicating to the Bureau that they are going to start using a off-site disposal to deep-well the DNBP wastewater, which had been presently going through their NPDES wastewater treatment system.

Q. Where is the impoundment which is part of their NPDES wastewater treatment system? Can you look at Vertac Exhibit 3 and point out to the Commission where that impoundment is?

A. I can say generally where it is. I haven't been to the plant since they rebuild these impoundments, and they're in a different configuration. It would probably be better to say that the impoundment was the final effluent. I believe--it had a different configuration than it has now, but it was in this area. [INDICATING ON EXHIBIT]

Q. And the area that you pointed it, is that marked

as the south impoundment pond?

A. Yes.

Q. On Vertac Exhibit 3.

A. Yes, this is it.

Q. Looking at Exhibit S-7, explain to the Commission the relevance of that document. Explain what it is and the relevancy of it.

A. Okay. I don't know how far back you want me to go.

Q. Just relate it to the dinoseb, to the carbon filters and the impoundment at this point in time.

A. In '77 or '78 the facility had been using off-site disposal for the dinoseb wastewater.

Q. Explain to the Commission what off-site disposal is so there won't be any confusion.

A. Deep wells in another state. The would generate the wastewater, put it in an impoundment, and then they would truck or barge--I'm not sure exactly the mechanism Vertac was using--that to someplace off their site for disposal in a deep well.

In about 1979 Vertac notified the Bureau that they were going to start cease using the off-site disposal and they were going to build a wastewater treatment system to treat the dinoseb wastewater at the site and discharge under their NPDES permit.

Q. And when did they notify you of that?

A. That was in late '79. I think the first notification probably was in November and was followed up in December.

[LETTER DATED JULY 11, 1979, FROM VERTAC MARKED EXHIBIT S-8 FOR IDENTIFICATION.]

MR. WILLIAMSON: And I don't mind introducing that with the same objection that you previously made.

MR. SMITH: For the record, if we could we object. This is another document not produced through us in accordance with our request.

HEARING OFFICER: The objection is acknowledged. Go ahead and enter it.

[EXHIBIT S-8 ENTERED INTO EVIDENCE, APPENDED HERETO.]

BY MR. WILLIAMSON:

Q. Mr. Cain, I show you what's been marked in evidence as Exhibit S-8 and ask you to tell the Commission what that is.

A. That is a letter from Vertac to Bill Barnett who was at that time the coordinator of the Industrial Wastewater Section, and what the letter does is transmit the flow schematic for their wastewater treatment system.

Q. What does that flow schematic show?

A. This flow schematic shows that the dinitro facil-

ity wastewater is collected---

Q. You used the word "dinitro facility."

A. Dinoseb.

Q. Is dinitro and dinoseb the same thing?

A. Synonymous--DNBP.

Q. Okay. Go ahead.

A. The facility on--the wastewater will be collected, equalized, neutralized, and then sent to carbon absorption.

Q. What facility would have been used for the equalization and neutralization?

A. The impoundment.

Q. Okay. Is that the impoundment marked as "south impoundment pond" on Vertac Exhibit 3?

A. Yes.

Q. Okay. On March 9, 1983, the Bureau of Pollution Control received Exhibit S-6.

A. Yes.

Q. What treatment process would have been in place and in use at Vertac from, say, 1979 to 1983?

MR. MALONE: May I ask for clarification? He's saying would have been. I want to know if this witness knows or is speculating what was in place. Are you asking him for a factual statement as to what was in place or are you asking him to speculate?

MR. WILLIAMSON: I'll restate the question.

BY MR. WILLIAMSON:

Q. Mr. Cain, prior to March 9, 1983, what was the treatment process relative to the NPDES permit that was in place and in use at Vertac for the DNBP wastewater stream?

A. Neutralization, equalization and carbon absorption.

Q. For clarification to the Commission, would that necessarily mean that DNBP went to the impoundment from the DNBP processing plant?

A. Yes.

Q. And following treatments in the impoundment it then went through activated carbon treatment?

A. Yes.

Q. And that would have been prior to March 9, 1983?

A. Yes, the process.

MR. WILLIAMSON: That's all I've got.

HEARING OFFICER: Any cross?

MR. SMITH: Yes, sir.

CROSS EXAMINATION

BY MR. SMITH:

Q. Is it Jerry?

A. Jerry.

Q. I don't think I've had the pleasure meeting you before, but I've worked very close with Bill Barnett in the past and have great respect for him. I take it he's no

longer head of the Industrial Wastewater Section.

A. No. He's been promoted.

Q. When did he leave that position?

A. July of last year.

Q. Would you agree with me that in point of fact the Industrial Wastewater Section has gone on record with this Commission and is stating that it believes the surface impoundment should be left open to treat run-off from the plant and act as an emergency spill control impoundment under NPDES?

A. That statement may have been made at an earlier time, yes.

Q. So that was the position of Bill Barnett or your group at one point in time; is that correct?

A. That's correct; probably without any consideration to the hazardous waste requirements.

Q. But you believed at that time that the impoundment could act as an emergency spill control impoundment under NPDES. Is that right?

A. Yes.

Q. And it still could, could it not?

A. As a spill containing device, if that's the only concern that you have---

Q. I understand that.

A. ---that's a correct statement.

Q. And in fact, you believe the impoundment should be left open to treat run-off from the plant. That's what you said too; isn't that correct?

A. I don't know if I said that, but the---

Q. That was the position of your department.

A. Probably. I'd like to know when that was said.

Q. Well, do you have any reason to doubt what I'm saying? Is that not in fact the position of the department?

A. It was the position of the Industrial Wastewater Control.

Q. Have any facts changed since that time that---

MR. WILLIAMSON: I'm going to object to the form of that question because we don't know when "since that time" was. There's been no predicate laid as to when "that time" is.

MR. SMITH: Let me get that marked.

[STATUS REPORT MARKED CEDAR EXHIBIT 7 FOR IDENTIFICATION]

BY MR. SMITH:

Q. Let me hand you what's been marked for identification as Cedar Exhibit 7, and I think it says across the top "Vertac Chemical Corporation Status Report." Are you familiar with documents of this type? I'll tell you this was taken out of the files of the Department.

A. Sure, I've seen documents of this nature.

Q. And basically why are those documents generated?

A. As an information source having a number of purposes; can be used as--in enforcement actions. It can also be used as an instrument to work out differences between sections.

Q. Would you read for me the sentences highlighted in yellow.

A. Okay. Says, "The Industrial Wastewater Section believes the impoundment should be left open to treat runoff from the plant and act as an emergency spill control impoundment under NPDES."

Q. Would you also look at the paragraph to which I point and tell me what date that is in that paragraph.

A. The date in the paragraph to which you're pointing, which is a different paragraph than what I read from---

Q. All right.

A. It was August 1983.

Q. Based upon your familiarity with documents of this type that are generated by the Department are we safe then in concluding that this document was generated sometime after August of 1983?

A. Let me read the sentence and I'll tell you. [EXAMINING DOCUMENT] Yes. The sentence is in past tense.

Q. No facts have changed, have they not, since August of 1983 which would change the position of the Industrial

Wastewater group?

A. I think I would disagree with that statement.

Q. But at some point in time the Industrial Wastewater Section believed the impoundment should be left open; is that correct?

A. We believed--what we believed was that there should be spill control at the site and that there should be some system. Whether that reflects an existing impoundment, if that impoundment can be approved under regulations, or if it represented a new system to effect the goal. And it doesn't necessarily have to an impoundment. It can be sumps or tanks or whatever is necessary.

Q. Well a simple way to put it at the time this report was generated, which we know is sometime after August 1983, this sentence accurately reflected the position of the Industrial Wastewater Section. Is that correct?

A. I think that's correct.

MR. SMITH: We'd like to ask that this be introduced into evidence and accepted into the record.

MR. WILLIAMSON: I don't have any objection.

[EXHIBIT S-7 ENTERED INTO EVIDENCE, APPENDED HERETO.]

MR. SMITH: The flow diagram, do you still have that or is that up here?

HEARING OFFICER: One of y'all have it right now.

BY MR. SMITH:

Q. First of all, I want to make sure I understood what your testimony was, Jerry. Is it your position that at the time of its submittal on September 13, 1979, that Exhibit S-7 accurately reflects the waste treatment facilities at Vertac Chemical?

A. The race?

Q. The waste treatment facilities.

A. Right, in 1979.

Q. Are you aware of the fact that this waste treatment facility prior to November 19, 1980, was changed from what's on this schematic?

A. There have been changes to that facility, that's correct.

Q. So you don't really know as of November 19, 1980, whether or not this schematic was accurate or not, do you?

A. Not on that date, no.

Q. Okay. Now you also are aware of the fact that the process wastewater from the DNBP operation is not a listed hazardous waste.

A. I don't know that.

Q. Are you aware of the fact that this department has so stated in writing that it is not a hazardous waste?

A. Again, I don't really know that. That's outside my---

Q. That could be true; you just don't know.

A. That's correct.

Q. So assuming with me for a second that that is a true fact, would you agree with me that you are aware of no evidence whatsoever of a hazardous waste being directly discharged but through this manufacturing operation into the surface impoundment?

A. I can't answer that question because you're supposing that I know all the answers of hazardous waste, the definitions, and I am not aware of that. That's not an area of my expertise. What I can say is that dinoseb waste has gone through that impoundment, and as to whether that's hazardous waste or not it's---

Q. In other words, the processed wastewater has gone into the impoundment. You're just saying you don't know whether that's a hazardous waste or not. Is that basically the summation of your testimony?

A. That's correct.

MR. SMITH: For the sake of brevity I would ask--I know this is a little bit abnormal, but if the Commission will indulge me, I assume there's no issue on that point from the Department's prospective.

MR. WILLIAMSON: No, I don't make that assumption at all.

MR. KAUFMAN: Well is it an issue?

MR. WILLIAMSON: I think that's an issue.

MR. KAUFMAN: Whether or not the DNBP process wastewater is a hazardous waste.

MR. WILLIAMSON: Well, we're talking about whether or not the discharge in that facility could have--the de minimis exception.

BY MR. SMITH:

Q. This series of letters, S-6---

HEARING OFFICER: I think it's Six, Seven and Eight; one being a flow chart, the other two letters.

BY MR. SMITH:

Q. They're separated in time, S-8 and S-6 by some four years roughly. Is not your testimony today that this is the only correspondence that's come from this plant to your section with regard to---

A. Oh, absolutely not.

MR. SMITH: Okay. Thank you.

HEARING OFFICER: Do you have some redirect?

MR. WILLIAMSON: Yes, sir.

REDIRECT EXAMINATION

BY MR. WILLIAMSON:

Q. Mr. Cain, as the coordinator of the NPDES Section, do you make decision for the Bureau of Pollution Control relative to RCRA facilities?

A. No, sir.

MR. WILLIAMSON: That's all I've got.

HEARING OFFICER: You're excused.

[WITNESS EXCUSED]

HEARING OFFICER: All right, proceed.

[OFF THE RECORD]

MR. WILLIAMSON: The State would like to make a motion to continue this hearing based on these reasons: That we have not had a chance to study Mr. Dietrich's data because there's been no discovery in these matters. We'd like to have our staff review that data, review his calculations.

The second reason is that this morning I was furnished these blueprints which partly are composed of the piping diagrams which could be dispositive of some of the issues before us. We had requested these earlier; we didn't get them until this morning at this hearing.

The third thing is we need to get from Vertac--I need copies of the supervisors' logs which might or might not document the various spills that could have occurred in this old area where these drums are stored.

MR. MALONE: I didn't hear that last.

MR. WILLIAMSON: I said I'd like to get copies of supervisors' logs and any other related reports from Vertac that might document spills that have occurred in what's shown as the dinoseb drumming area before it was removed.

MR. SMITH: Let me address that, if I could. In all due respect to counsel opposite, this hearing rose out of an enforcement action filed by this Commission against this company. In that proceeding we filed a Motion to Dismiss and specifically listed the legal question that we've been addressing today.

I suggest that the reason a continuance is sought is because the State finds as we get into the hearing that they're unable to offer any proof that contradicts the facts we've put on, and what they're really asking for is an opportunity to regroup, go back to the drawing board and try to develop some evidence. In all due respect to George and his staff, they've known this was coming from the exact same moment I knew it was coming. They could have prepared just like I prepared.

I don't think that it will come as any great surprise to the Commission to know that the expertise I have in this room, some of which I have not even put on the stand, is what we feel to be the best in the country, and as a result it ain't cheap, and to require us to continue this hearing, to regroup all these people, to bring them back in there, is going to be a tremendous expensive burden on our behalf, and I don't think it's one we ought to be put to on the basis that the State's not ready.

Because all Mr. Dietrich has done for these people

is explain to them what the regs. said. We met with them yesterday and basically told them the conclusions and how we reached the conclusions. George talks about not getting the diagram. The request for the diagram was made in letter form. It was received Friday. Yesterday when we met we didn't have it with us, so I brought somebody out here at 5:15 last night beating on the front door, beating on the back door. So that hasn't been some long overdue request.

And very frankly if--you know, we could get into a basis of information that hasn't been exchanged. The regs. of this Commission specifically state that copies of all evidence that exists in written form be sent to you at your request or you can visit the offices of the Bureau anytime in the normal business hours. I requested it and I didn't get it. So if anybody has got a complaint about a continuance in preparation, it's us and not the staff. And I would strongly encourage as respectfully as I know how that they not be allowed to continue this proceeding on that basis.

HEARING OFFICER: I would recommend that you not continue the proceeding, but we'll let the Commission decide that.

[COMMISSIONERS CONFERRING]

MR. WILLIAMSON: I want to point out to the Commissioners that you don't have a quorum.

HEARING OFFICER: I understand we don't have a

quorum, George. I can count too.

COMMISSIONER TRAVIS: I thought we specifically got that point waived by the movant in this matter, who would be the one that would certainly be entitled to claim if we don't have a quorum. Are you now complaining on behalf of the staff that we don't have a quorum?

MR. WILLIAMSON: I'm not sure that they waived.

MR. SMITH: Yes, we waived.

MR. WILLIAMSON: Well in that case y'all can decide.

COMMISSIONER TRAVIS: What I was going to ask, if it was satisfactory in the interest of getting this matter settled--I am not moved, George, by your request to continue. I would like to see this matter continued on tonight if necessary; but let's get through with it. I don't think that the--I'm expressing my opinion in response to what you've just said. I don't think that any evidence that has been presented is so significant and of such nature that it has brought about some great surprise being introduced into this hearing today so that the State is not adequately prepared to respond to everything that's been brought up. I mean, if we--I just would like to see this matter concluded. We have started it. I think if we can hear it all in one day, it will all be before us and we can make a relatively quick decision.

The thing that I was going to ask at the conclusion of our testimony is that the two sides give your approval to permitting the three Commissioners who are here and who have been here all day long to make this decision without having benefit of the record. I think we can make--particularly with your help, and I was going to suggest some memos from each side. I think that this decision can rather intelligently be made without having to have this whole record transcribed for purposes of making the decision.

I would like to throw that out at this point. I would like personally to see us finish the hearing today, and I would like to ask that we get the approval from the three Commissioners who have heard all the testimony to make this decision in behalf of the Commission with the assistance of some memos that I am going to tell you the content that I thing ought to be in the memos to help us make the decision.

MR. WILLIAMSON: As far as I'm concerned, that doesn't bother me, and I--you know, I don't think there's any requirement that you have any memos. I think if we can conclude today that you will have heard all the evidence and that you can make your decision based on what you're heard.

COMMISSIONER TRAVIS: I think we can too, George; but the only thing I think is that perhaps if you would give us the memos that I am going to suggest--if this is not

asking too much of you all--I think it would help us focus in on these issues and make maybe perhaps a little more enlightened and perhaps more intelligent decision on behalf of the Commission for this hearing. George, would you feel particularly aggrieved if we ask you to go ahead and continue this hearing?

MR. WILLIAMSON: No.

COMMISSIONER TRAVIS: Of course, you have asked us to. Alva would like--I think to be responsive to you. I don't know how Earl feels. I certainly don't want to put a burden on anybody. But we do have a lot of people gathered here and you have people from out of town. The movant has people from out of town. It would really be helpful, I think, for us to get this matter hurried and completed here today if possible.

COMMISSIONER BOYD: I hate to impose Bill and his crew to come back here and reassemble again, and of course, I don't want to do anything to take from George at all there; but I would like to personally see it continued and finish as far as the hearing tonight myself.

MR. SMITH: As far as submitting a Brief---

COMMISSIONER TRAVIS: I'm not asking for a Brief, Bill; but what I'm asking for in just a fairly brief memo form--I think you can do it in two or three pages, George, and I think it would be helpful to us to make this decision.

COMMISSIONER TEMPLE: Well subject to legal review on this, we will just make a decision to go ahead with the case today.

HEARING OFFICER: All right. Continue on, George.

JACK McCORD,

having first been duly sworn by the court reporter, was examined and testified on his oath as follows, to-wit:

DIRECT EXAMINATION

BY MR. WILLIAMSON:

Q. State your name for the record, please, sir.

A. Jack McCord.

Q. What do you do for a living?

A. I'm project officer for the Hazardous Waste Section.

Q. Give me your employment history as it relates to the Bureau of Pollution Control, please, sir.

A. I've been with the Bureau 11 months now.

Q. Where did you work before that?

A. I was in school.

Q. Give me your educational background.

A. I've got a B.S. in chemical engineering.

Q. Is that all?

A. Yes.

COMMISSIONER TRAVIS: That's pretty good.

[LAUGHTER]

BY MR. WILLIAMSON:

Q. Mr. McCoy, are you familiar with Vertac Chemical?

A. I've been out there three times, and I've been the project officer since last November.

Q. To be a project officer, what does that mean?

A. I handle most of their correspondence without hazardous waste. I review inspections. I work on their permit for hazardous waste storage impoundment.

Q. Have you made any inspections?

A. I have not made any official interim status inspections.

Q. Have you visited the plant?

A. I have visited the plant.

Q. What areas of the plant have you visited?

A. I have visited around their impoundment and landfill, their DNBP production area, their hazardous waste drum storage area, their return product storage area, the DNBP drumming facility building and areas in between.

Q. Relative to the drum storage area how many times have you visited it?

A. I've been there twice.

Q. Within the last 11 months?

A. Yes.

Q. How would you describe the operation that you observed?

A. The hazardous waste? Are we discussing the hazardous waste storage area or the return product area?

Q. We're going to discuss the hazardous waste storage area.

A. The last time I was there it contained empty drums, some discarded packages, some cloth in the drums. The drums are not in good shape; there are holes in it. But the hazardous waste contained in the hazardous waste drum storage area consisted principally of empty containers and rags.

Q. Would you describe it as a clean or sloppy operation?

A. It wasn't--it wasn't much to run off or wasn't much--wasn't dirty. You didn't see waste running.

Q. Okay. Concerning the return product storage area, how would you describe it?

A. At the time I was there, which is the beginning of September--you know, the last time I was there--they had several empty containers, but the floor was littered with what appeared to be DNBP and absorbant on the floor. There was quite a bit of it on the floor there.

Q. Would you describe that as clean or sloppy or---

A. That was pretty sloppy.

Q. Mr. McCord, have you been involved in any wastewater or hazardous waste sampling over there in the last few

weeks?

A. Yes. I believe it was September 3.

MR. SMITH: For the sake of brevity we'll stipulate as to the sampling techniques and the results, if you're going to stick that in evidence, George.

MR. WILLIAMSON: Okay. That will be fine.

[DOCUMENT ENTITLED "SAMPLE RESULTS - VICKSBURG CHEMICAL" MARKED EXHIBIT S-9 FOR IDENTIFICATION.]

MR. SMITH: We'll stipulate to this.

MR. WILLIAMSON: As I understand it, Vertac has stipulated to the introduction of what's been marked as S-9 into evidence; is that correct?

MR. SMITH: Correct.

[EXHIBIT S-9 ENTERED INTO EVIDENCE, APPENDED HERETO.]

BY MR. WILLIAMSON:

Q. Mr. McCord, I'm going to show you Exhibit S-9 and ask you to tell the Commission what that is.

A. It's our sampling results, our partial sampling results, from our sampling trip to Vertac on I believe September 3.

Q. Have you been involved with sampling other hazardous waste facilities in the State of Mississippi?

A. I've been on the sampling of groundwater.

MR. WILLIAMSON: Okay. I think that's all I've got.

CROSS EXAMINATION

BY MR. SMITH:

Q. What is the absorbant that you saw in the Drum Storage Area Four?

A. To help in the cleanup of spilled product, spilled liquid product.

Q. When you said that the absorbant looked kind of sloppy, does that mean it was full of yellow color?

A. It was yellow.

Q. And DNBP is yellow?

A. Yes.

Q. So we can assume that the absorbant was doing what it was intended to do; is that correct?

A. Yes. But that's not what I meant by sloppy.

Q. What you meant by sloppy was in addition to the absorbant?

A. Just the absorbant was not contained in any way except a roof over it, and it didn't look like any effort had been made to pick it up.

Q. Do you know how many days prior to the day of your investigation there had been some returned product stored in that facility?

A. Returned product stored in that facility? I don't

know when it had been last moved out.

Q. So it may well have been that a great deal of this return product came in the day before.

A. It could have been the day before.

Q. It could have been hours before, couldn't it?

A. Yes.

Q. So when we say the absorbant was loose out there you don't really know how much of an opportunity the company had to clean that up, do you? If they in fact had it neatly put in there and the return product had come in there hours before you got there, they may very well have physically not had an opportunity yet to clean that absorbant up. Isn't that right?

A. That's possible.

Q. Okay. You were saying, I think, in reply to George's question that the hazardous waste storage area looked pretty good on whole.

A. Yes. When I was there on, I'm saying September 3--I might not remember the date correctly--it did look pretty good.

Q. You would agree with me that it's pretty prudent in the return product area to use absorbant, wouldn't you?

A. Yes.

MR. SMITH: That's all I have.

HEARING OFFICER: Does the Commission have any

questions? Do you have any redirect, George?

MR. SMITH: One last question, if I could.

HEARING OFFICER: All right.

BY MR. SMITH:

Q. There's no evidence whatsoever that any of the waste that is found in this return product storage or hazardous waste storage area worked its way to the impoundment. You have no evidence of that at all, do you?

A. No, I don't.

MR. SMITH: Okay.

HEARING OFFICER: George, do you have any redirect?

MR. WILLIAMSON: No, I don't.

HEARING OFFICER: All right. You're excused.

[WITNESS EXCUSED]

CHUCK ESTES,

having first been duly sworn by the court reporter, was examined and testified on his oath as follows, to-wit:

DIRECT EXAMINATION

BY MR. WILLIAMSON:

Q. State your name for the record, please, sir.

A. Chuck Estes.

Q. Mr. Estes, what do you do for a living?

A. I'm coordinator of the Hazardous Waste Section for the Bureau of Pollution Control.

Q. How long have you been doing that, sir?

A. As the coordinator just over a year.

Q. Okay. Are you familiar with Vertac Chemical?

A. Yes, I am.

Q. How are you so familiar with them?

A. I directly supervise Jack McCord who is the project engineer for that facility, and before that I was more directly involved with the facility as the project officer of the type work---

Q. How long have you been doing that altogether?

A. Since I began work with the Bureau August 1981.

Q. Are you familiar with the Part A Application submitted by Vertac?

A. Yes.

MR. WILLIAMSON: Bill, I'm going to introduce certain parts of the Part A and the Part B, and I sure hate to put this whole thing in just from the standpoint of being so bulky. What about---

MR. SMITH: I think for the sake of brevity, without me being able to go through the whole thing, George, that's the only way to do it. We'll be glad to prepare the additional copy and give it to Kay.

MR. WILLIAMSON: Put the whole thing in? Okay. Do you have any objection then to the entrance?

MR. SMITH: No.

MR. WILLIAMSON: Okay. We'll have this marked as S-10.

[PART B APPLICATION MARKED EXHIBIT S-10, APPENDED HERETO.]

COMMISSIONER TEMPLE: What is that?

MR. WILLIAMSON: I'll get into that shortly.

BY MR. WILLIAMSON:

Q. Mr. Estes, I'm going to show you what's been marked as Exhibit S-10 that's been introduced into evidence. Would you tell the Commission what that is.

MR. SMITH: George, just a second before we go forward. I just want to make sure that we agree what was stipulated to. We agree that the up-to-date Part A and Part B with all the amendments or changes that have been made since the time of its filing can be introduced. And that may be what Chuck has, and Chuck can address that.

THE WITNESS: I believe this is more representative of the last complete filing which would have been somewhere around June 19, 1985, I believe. There have been subsequent closure plan and groundwater information that probably may not be reflected in this. Jack McCord---

MR. SMITH: If those are the only things out of it, that's fine.

THE WITNESS: Everything else would be the same as the last time we went through this process.

BY MR. SMITH:

Q. Okay. Mr. Estes, just go ahead then and tell the Commission what you have there that's marked Exhibit S-10.

A. Okay. This is basically a permit application that then Vertac Chemical submitted--first submitted in August of 1983 and subsequently modified and resubmitted over a period of time. As I said, the last time was around June 19, 1985, which this document is more reflective of. And it's a document that contains descriptions of the process; contains, as we talked about earlier, groundwater information, closure plan, post-closure plan documents. It discusses waste characteristics that are being regulated in the different units at the plant.

This document primarily focuses on the impoundment. At the time we're talking about here, June 19, 1985, the only facility or only unit at the site being regulated was the surface impoundment. So most of the focus, or all the focus in this document should have been on the surface impoundment. Of course, that's not to say there weren't units previously that were--that would have needed to have a permit; but the facility changed operation slightly to not have to focus on those units.

Q. Does Exhibit S-10 contain a Part A and a Part B Permit Application for hazardous waste?

A. That's right; for hazardous waste management.

Q. When was the Part A filed?

A. November 1980.

Q. What hazardous waste did the Part A Application cover?

A. Well, the Part A covered waste that the company was listing as corrosive DOO_2 wastewater from process areas that were going to the impoundment. Also waste run-off, as we've been discussing earlier, run-off and other process losses that made it to the impoundment; and those were listed as $P0_20$, which in the regulations is defined as the commercial product dinoseb, which we've been discussing earlier during the day. And the Part A, the initial Part A, discusses--is that what you're referring to?

Q. Um-hum.

A. I guess I should make it clear that the Part A has changed over time. The initial Part A listed a drum storage area, and it also listed some--listed the impoundment also. So it's maybe a little bit confusing. As of the last date this was submitted, the Part A only really reflected the surface impoundment.

Q. Okay. But the original---

A. Less than 90-day storage.

Q. But the original Part A covered drum storage?

A. That's right.

Q. Why is that?

A. The company chose to--under the regulations you have a choice. You can either choose to store waste, in this case in drums, for over 90 days and in the eyes of the regulations and Congress and people who wrote the regulations that is a higher degree of management. You have to do more things. You have to inspect. It's a higher degree of management. You can choose to store less than 90 days and there's a lower degree of management of the drums required under the scenario.

Q. It covered the original part; it covered both the drum storage area and the impoundment.

A. Right.

Q. Are you aware of any indication from the company at the time they filed that Part A Application that they were seeking a de minimis exception?

A. Not at the time, no.

Q. Is there anything in the Part A Application specifically that acknowledges that run-off from hazardous waste storage areas might reach the impoundment?

A. Yeah, there is verbiage in the Part A that talks about plant run-off.

Q. Would it be safe to assume that a regulator reading that Part A, that run-off from the storage area was anticipated to get to the impoundment?

MR. SMITH: I'm going to object to that. That

calls for rank speculation.

HEARING OFFICER: Ask your question a little different, George.

BY MR. WILLIAMSON:

Q. Mr. Estes, if you had been reading that document as the regulator and you had read in the Part A where it referred to run-off in the drum storage area getting to the impoundment or an inference to that effect would you have assumed that the applicant anticipated run-off from those drum storage areas so reaching the impoundment?

A. Because they have a drum storage area, and it would depend on how that drum storage area was maintained, the Part A does say that the impoundment also contains plant area rainwater run-off, spills and leaks, et cetera. With that general of a description I would have to assume--I could assume and probably would assume that there's a potential for that area--for the drum storage area to have an impact on the impoundment.

Q. Turning to the Part B Application, when was that filed?

A. The first filing was in August of '83.

Q. Okay. Do you have indications from the Part B Application that the applicant anticipated run-off from drum storage areas or other hazardous waste areas into the impoundment?

A. There is language in the Part B Application that refers to spills and leaks from the process area or the product storage area, or as they say, water from any cleanup of a spill; that that appears the intention of the applicant that that falls under the PO_2O--in other words, commercial product, dinoseb--that those releases do flow to the surface impoundment and therefore that was the justification for regulating the surface impoundment.

Q. Okay. Are your familiar with the de minimis exception we've heard spoken of today?

A. I hope so.

Q. I'm going to show you what's been marked as Exhibit S-2, and ask you to just quickly tell the Commission what that is.

A. Exhibit S-2 is a background document or excerpt from the background document on the de minimis rule.

Q. Also included in S-2 is---

A. Right. The whole November 17, '81, Federal Register.

Q. Based on your training, education and experience here with the Bureau would it be your opinion that run-off from the surface at Vertac, if it reached the impoundment, would that qualify this facility for de minimis exception?

A. If the run-off is from spills and leaks from regulated storage facilities, as we've been discussing, that

store hazardous waste, those wastes would clear not in the purview of this--it would not be included as de minimis losses. Those are not wastewater streams. Those are leaks, spills, other regulated hazardous waste which is not what the de minimis rule is talking about.

Q. In the Part B Application, does the Part B Application submitted by the applicant, which is Vertac, does it indicate run-off which would get to the impoundment--which run-off would come from the drum storage area, or hazardous drum storage area?

A. You may have to repeat that.

Q. In the Part B is there language which would indicate that run-off from a storage area for drums containing hazardous material would get to the impoundment?

A. The Part B does not specifically say that. Only in general terms could you imply that, I think.

Q. Well in general terms does it indicate that?

MR. SMITH: Again, I'm going to quickly interpose an objection. If he knows whether or not this stuff has gone in there, he can answer that; but to sit here and say what he thinks a reg. may mean, which he's always told us is sort of vague insofar as this Part B is concerned, is just a waste of time.

HEARING OFFICER: Answer the question of what you understood the application to apply concerning the run-off.

What you understood personally.

THE WITNESS: I understand--my personal understanding would be that if there is any source on that plant in general--they're speaking in general terms here--of surface run-off, and if there's any source that can affect that surface run-off--and in this case our general knowledge and my general knowledge. I have been to the plant in the past, and I'm also aware of the testimony that David Lee gave and the plant officials that there was no cover over those drums; so therefore any run-off from that storage area could be contained in the general run-off to the impoundment. And I would say--would be my personal opinion, that if there were leaks, that those leaks would find their way to the impoundment. That would be my opinion.

HEARING OFFICER: Based upon your visit to the site and the topography and all, was there anywhere else for the run-off to run to than to that catchment basin?

THE WITNESS: Not that I'm aware of.

BY MR. WILLIAMSON:

Q. Referring to the Part B Application--and I'm opening to the first page of Exhibit S-10, and I'm actually on the second page of that application. Mr. Estes, I want you to read the last two sentences of the first paragraph.

A. Would you--could you be specific? Start there?

Q. Yes.

A. Okay. "Spills and leaks from the process area or product storage area or water from cleanup of such a spill fall within PO_2O of RCRA Paragraph 261.33. Such spills flow to the three million gallon surface impoundment."

Q. What is PO_2O of the RCRA Paragraph 261.33?

A. That's the commercial chemical product dinoseb.

Q. Is that DNBP?

A. That's DNBP.

Q. I have moved over to another part of the Part B Application, which is Section (a)(8)ii, and I'd like for you to read the title of that section and then the closing paragraph of that section.

A. The title is "Run-Off Prevention" and the paragraph that you pointed out reads: "In summary, the strategy on run-off is to contain the run-off in the surface impoundment. Controls of the surface impoundment are treated by carbon absorption prior to discharge to the Mississippi River. It is by virtue of its spill catchment function that the surface impoundment is categorized as a hazardous waste storage facility."

Q. Mr. Estes, does that indicate that they--in your opinion as a regulator, if you were reading that, would you read that as indicate the applicant anticipated spills occurring and such spills going to impoundment?

MR. SMITH: I'm going to object again. Part A and

Part B speak for themselves. I don't think we need any interpretation of them.

MR. WILLIAMSON: That's okay. Fine.

BY MR. WILLIAMSON:

Q. Going back to Exhibit S-2, assuming that spills referred to in the Part B came from the drum storage area containing hazardous waste---

MR. SMITH: I'm going to object to that question because it assumes a fact that is not in evidence.

MR. WILLIAMSON: I'm asking a hypothetical of this expert.

MR. SMITH: Have we qualified this man as an expert in something? He's certainly not been tendered as such.

MR. WILLIAMSON: He's qualified to testify as an expert on behalf of the---

MR. SMITH: I will agree that Chuck is a very bright, well-education guy, but I haven't heard him prepped as an expert yet in an area, nor do I know what area you're offering him in.

MR. WILLIAMSON: We're going to offer him in the area of his expertise dealing with the hazardous waste regulations.

BY MR. WILLIAMSON:

Q. Mr. Estes, how long---

MR. SMITH: I'm going to object to any tender of this witness as an expert in these regulations. He didn't write them; he wasn't involved in the writing of them; he played no role in it. He's done no more than what I've done, and that is, read them.

MR. WILLIAMSON: Eight hours a day, five days a week, that would qualify him to be an expert.

HEARING OFFICER: I agree with Mr. Smith.

MR. SMITH: I mean, I don't mind Chuck testifying about this. I just don't want him tendered into the record as some expert in an area--I've got great confidence in Chuck and his abilities; but I don't want him tendered into the record as an expert in an area in which he is not an expert.

HEARING OFFICER: I agree with Mr. Smith. I don't think sufficient information has been presented to establish him as an expert. He can certainly testify with respect to his opinion and his knowledge as an environmental engineer and his opinion as a reader of that document, as the regulator, and based upon his visits to the site where he thinks water or any other liquids would flow that are deposited upon the surface.

BY MR. WILLIAMSON:

Q. Mr. Estes, do you have an opinion as to whether or not the Vertac impoundment that's the subject of this

hearing falls under the exception of the de minimis rule?

A. It's my interpretation of the regulations and the guidance documents associated with that, and in looking at our lab results from samplings that we've taken, I believe two things:

1) If there were wastes that was received by the impoundment that were regulated wastes stored in hazardous waste storage, drum storage areas, that--the de minimis regulations don't apply. So that particular question stands on its own in my mind.

If we're just looking at the run-off spills that has been received by the impoundment over a period of time, my feeling is--my judgment is that the concentrations that we have seen, and the background documents speak to concentrations as being the key element in using your judgement, that those concentrations are of concern to me--do appear to be high--and therefore are of regulatory concern. The regulations go on to speak about listing such wastes. That hasn't been done at this facility. However, the facility has been operating as a hazardous waste management facility, and that's been--that's been the justification and the direction we've been going in.

I don't know if I answered your question or not.

Q. What you're telling the Commission is that the issue of--the listing authority of EPA simply has never been

raised to this date.

MR. SMITH: I'm going to object to him leading the witness.

HEARING OFFICER: Y'all have been leading witnesses all day.

MR. SMITH: Not quite that bad, Colonel.

BY MR. WILLIAMSON:

Q. To your knowledge has the listing authority been raised by EPA to---

A. Not to my knowledge.

Q. To your knowledge has the Bureau ever requested EPA to---

A. Not to my knowledge.

Q. So just in summary, Mr. Estes, you're saying that if this run-off from the hazardous drum storage area got to the impoundment that would take the facility out from under the de minimis exception rule?

A. I'm saying that those releases are not covered by the de minimis rule. Those releases are releases of hazardous waste that are--that are under those definitions in the hazardous waste regulations are considered discharges, considered disposal, and if it reaches surface impoundment, that surface impoundment is also covered under the full regulations of the hazardous waste---

Q. Would that mean the de minimis exception applies

or it doesn't apply?

A. For any waste that leaves a regulated hazardous waste drum storage area, that means de minimis losses don't apply to those releases. For the run-off in that type of thing, then I believe those do get more to the question of de minimis--the de minimis rule has applications there. As I said earlier, it's my judgment that those concentrations are of regulatory concern. EPA however has not made a listing decision on this facility. The facility has been subjecting itself to regulation up to this point.

Q. Based on what you've heard here today, do you think the de minimis exception applies to this facility?

A. No, I don't.

Q. Just for the record, to be sure, I show you Exhibit S-9. Are those the concentrations you referred to?

A. yes.

Q. Does the date on Exhibit S-9 reflect concentrations which are of concern to you?

A. Yes.

Q. Why is that?

A. These concentrations are in parts per million. Some are in the thousandths of parts per million. Again, this is a judgment thing. Regulations speak to high concentrations; therefore, you have to make judgments. My judgment is that these concentrations are significant. I have

looked at some data in toxicity reports. I'm not a toxicologist. I can only look at books. They indicate levels of--exposure levels that those kinds of levels would be over or would be considered high.

Q. Okay. Mr. Dietrich says this stuff is acutely toxic. Would the concentration on Exhibit S-9 give you concern if you knew that DNBP was acutely toxic?

A. Again, just as my professional judgment of working in this area, yes, it would.

MR. WILLIAMSON: Let's have these two documents marked.

[FORM ENTITLED "HAZARDOUS WASTE MANIFEST" MARKED EXHIBIT S-11 FOR IDENTIFICATION, AND SITE INSPECTION REPORT MARKED EXHIBIT S-12 FOR IDENTIFICATION.]

COMMISSIONER TRAVIS: May I see those exhibits, please. [EXAMINING DOCUMENTS] Is dinoseb listed as one of the specifically numbered hazardous waste?

THE WITNESS: Yes, Mr. Travis, it's PO_2O.

COMMISSIONER TRAVIS: PO_2O?

THE WITNESS: It's a commercial chemical product.

COMMISSIONER TRAVIS: I don't see it on my list that I'm looking at.

THE WITNESS: I'm not sure which list you're looking at.

[WITNESS APPROACHES COMMISSION]

THE WITNESS: It's listed alphabetically, not numerically.

[COUNSEL OPPOSITE EXAMINING EXHIBITS]

MR. SMITH: I want to make the same objection for the record. While we're looking at that, if we could, just to expedite matters I'd like to ask an opportunity to file without sponsor the letter requesting the documentation in evidence and also the regulations from the Department requiring that that evidence be given to us.

HEARING OFFICER: All right.

[LETTER DATED SEPTEMBER 2, 1986, ENTERED INTO EVIDENCE AS CEDAR EXHIBIT NO. 8, APPENDED HERETO.]

HEARING OFFICER: Proceed.

BY MR. WILLIAMSON:

Q. Mr. Estes, I want to ask you one or two more questions to be sure the Commission understands this. If the impoundment were receiving certain waste that did in fact qualify it for the de minimis exception and at the same time it were receiving waste or spills from the hazardous waste drum storage area through the run-off, would such a facility then qualify under the de minimis exception?

A. No, it would not.

Q. And why would it not?

A. Because the mixture rule the--the general term says that any mixture of a hazardous waste which is spilled from the drum storage--hazardous waste drum storage area, would be a release of a regulated hazardous waste mixed with a nonhazardous waste, which any wastewater that falls under the de minimis rule would be nonhazardous; that that mixture would then be regulated as a hazardous waste.

Q. I want to show you what's been marked for identification as Exhibit S-11 and ask if you can tell the Commission what that is.

A. This is a manifest form, "Hazardous Waste Manifest Form," that was sent to our office from Vertac Chemical Corporation which lists a shipment--which signifies a shipment of hazardous waste. It's described as--the treatment storage disposal facility is Calgon Carbon Corporation. It identifies a tank truckload of waste that is characterized as PO_2O.

Q. What is PO_2O?

A. That is dinoseb.

Q. Is that for carbon or for what?

A. Since it is being disposed--sent to the Calgon Carbon Corporation--and that's their business to recycle spent carbon--I would assume it is spent carbon that they are classifying as a hazardous waste.

MR. WILLIAMSON: I would move this be introduced

into evidence. I presume you're going to make your normal objection.

MR. SMITH: Right.

[EXHIBIT S-11 ENTERED INTO EVIDENCE, APPENDED HERETO.]

MR. WILLIAMSON: We'll go ahead and have Exhibit S-12 marked in evidence too, acknowledging his objection.

[EXHIBIT S-12 ENTERED INTO EVIDENCE, APPENDED HERETO.]

BY MR. WILLIAMSON:

Q. Mr. Estes, just in general laymen's terms, what is that acknowledgement of on behalf of the company?

A. It would indicate to me that they are classifying their spent carbon as a hazardous waste.

Q. What hazardous waste?

A. As PO_2O, dinoseb.

Q. Dinoseb?

A. Yes.

Q. Did you hear the testimony of Mr. Keen this morning?

A. Yes, I did.

Q. Did he make any statement about backwashing, carbon filters, et cetera?

A. Yes.

Q. Where did he say that backwash went?

A. It went into the impoundment.

Q. Would that have been carbon from the filter that was being intentionally mixed with wastewater?

A. From his testimony I would say yes.

Q. And that compound is presently manifested as PO_2O, as shown on Exhibit S-11; yes or no?

A. PO_2O, yes.

Q. In your opinion would that then--the fact that the waste stream from the carbon filter was being disposed of i the impoundment, would that take this facility out from under the de minimis exception?

MR. SMITH: I'm going to object again. This is a completely circular argument that's being advanced, and that is, that because we say under manifest purposes, which has absolutely no relationship whatsoever to what issues address us today, is a hazardous waste. Chuck is then going to say that hazardous waste went in there. But the issue is that he has no firsthand knowledge whatsoever that he's been able to give us yet as to whether or not a hazardous waste other than de minimis process losses was directly discharged into that surface impoundment. And George is trying to get him there by going all the way around the world.

MR. WILLIAMSON: Can I respond to that?

HEARING OFFICER: Yes.

MR. WILLIAMSON: There is evidence. Mr.

Keen--where is Mr. Keen? Mr. Keen said that the carbon went back to the impoundment. I didn't say that---

MR. SMITH: I don't disagree with that. What nobody has said though is that the carbon is a hazardous waste.

MR. WILLIAMSON: And then here is evidence, S-11, that says at the top "Hazardous Waste Manifest." I didn't say that. Chuck didn't say that. They said it. There's nothing circular about that. By their own admission the carbon is PO_2O, which is DNBP.

MR. SMITH: I don't want to get in an argument. We don't admit that the manifest proves a thing; but we just make our objection for the record.

HEARING OFFICER: Go ahead and answer the question.

BY MR. WILLIAMSON:

Q. Chuck, back to the question. Do you have an opinion as to whether or not the fact that carbon is being backwashed into the impoundment would take this facility out from under the de minimis exception?

A. Based on the information that--my judgment will be that if they are handling carbon as a hazardous waste and carbon is backwashed into the impoundment, that was a release of a hazardous waste.

Q. I want to show you Exhibit S-12 that's been intro-

duced into evidence and ask you to tell the Commission what that is.

A. It's a Site Inspection Summary that--of an EPA inspection at Vertac Chemical or Vicksburg Chemical.

Q. Are there portions of that document which indicate the sloppy nature of operation of Vertac, or it indicates spills, losses or whatever that might take this facility out from under the de minimis exception?

A. There is verbiage that describes the product storage area and drum storage area in general as having a lot of drums that were--could not be identified, or leaks that were in evidence at the drum storage area.

Q. When was that inspection done?

A. August 7, 1986.

Q. And who did it?

A. It was conducted by Bill Styner and James Stone.

Q. Okay. And who else accompanied them?

A. John Hill of Vicksburg Chemical.

MR. SMITH: So Chuck wasn't even on the inspection?

MR. WILLIAMSON: That's right. It's already in evidence. Your objection is recorded though. That's all I have.

CROSS EXAMINATION

BY MR. SMITH:

Q. I want to clear up one thing right off the bat. Dinoseb is not a listed hazardous waste; in fact, it is a commercial chemical product. Isn't that correct?

A. That's right.

Q. Okay. So when you answered the question earlier was dinoseb a listed hazardous waste, the correct technical answer to that is, no, it's a commercial chemical product. Is that right?

A. That's right.

Q. Now in the regulated community I hear the term quite often "protective filing" or "protective filers." Have you ever heard that concept discussed before?

A. Yes.

Q. And in fact, RCRA was passed originally in 1976, was it not?

A. The law, yes.

Q. And it wasn't even until 1980 that Mr. Dietrich's group was kind enough to give of us in the regulated community a final definition and listing of hazardous waste. Isn't that correct?

A. Yes.

Q. So there was a great deal of uncertainty and ambiguity and concern in the regulated community about exactly what RCRA meant. Isn't that correct, John?

MR. WILLIAMSON: I object to the form of that

question. Chuck doesn't know what the concern---

HEARING OFFICER: I think he can answer that. He dealt with them on a day-to-day basis.

A. In my--in 1981 I can only say at that point in time when I first started working in the area that there was some uncertainty I'm sure.

BY MR. SMITH:

Q. Okay. In fact, the legal liability that's been posed by RCRA included both criminal sanctions and civil sanctions for the violation of certain provisions of RCRA. Isn't that correct?

A. That's correct.

Q. So it was not unusual at all in the regulated community for people to in effect overfile, to make a protective filing, to make a filing that may well turn out to be unnecessary; but just in case, I'm going to cover myself and my company. And that was not an unusual practice under RCRA, was it?

A. I don't think that I can truthfully speak to that, Bill. I can't say that most of the facilities that we are regulating now have dropped out of regulation because they didn't need to be regulated in the first place. I don't know that I could really--in fact, I might have to say the opposite of that. I just don't think I could say.

Q. So you're saying that since 1980 there's been no

protected filings made by the regulated industry in this country under RCRA?

A. I can't speak to the country. I can only speak to Mississippi, and my judgement is that we haven't had a serious number of protected filers in Mississippi.

Q. Let's get at it another way, Chuck, if we can. Isn't it a point of fact that this company wrote you as early as 1984 and told you we're going to make filings under RCRA, but we don't think this is a RCRA facility? In fact, on December 20, 1984, Mr. Karkkainen wrote you and basically too the position with you that the surface impoundment was not a RCRA facility and it should be delisted Isn't that correct?

MR. WILLIAMSON: I'm going to object to the form of that question also, because the witness has no documents in front of him to recall, and the question refers to some kind of letter of something or another, and the witness should be allowed to look at that letter before he answers the question.

MR. SMITH: I'll show him the letter.

[DOCUMENT TENDERED TO WITNESS]

BY MR. SMITH:

Q. Chuck, go on and look at that, and while you're looking at it, let me ask you this: As a matter of fact---

MR. WILLIAMSON: I'm going to object to that also,

because the witness has to have time to read the document. He can't do but one thing at a time. I apologize that it takes time to conduct a hearing, but if we're going to do it I've got to make my record right.

HEARING OFFICER: He's looking at the letter.

COMMISSIONER TRAVIS: Will what he's being asked to comment on be placed in the record, Bill?

MR. WILLIAMSON: I don't have any objection to all of them going in; whatever you want to ask him about.

[LETTER DATED DECEMBER 20, 1984, TO CHUCK ESTES FROM DICK KARKKAINEN ENTERED INTO EVIDENCE AS CEDAR EXHIBIT NO. 9, APPENDED HERETO.]

MR. SMITH: Let's get this one marked too.

[LETTER DATED FEBRUARY 21, 1985 ENTERED INTO EVIDENCE AS CEDAR EXHIBIT NO. 10, APPENDED HERETO.]

BY MR. SMITH:

Q. Chuck, I'm not trying to make a big point out of this. I think you and I have discussed this before. The fundamental thrust of what I'm trying to say is that Mr. Karkkainen on behalf of this company has maintained for quite some time that this is not a RCRA regulated facility, but that we're going to go on and make these filings because y'all basically in effect told us to make the filings. And

so, when I talk about a protectionist-type filing, we're talking about where a company doesn't believe that RCRA is applicable to it, but it nevertheless goes forward with the permitting process. And is that not in fact the case that has existed with respect to Cedar?

A. I don't know that I would share that exact---

Q. Well, let's look at the December 20, 1984, letter. Basically they write to you and discuss the need to have a meeting to review declassification of the surface impoundment. I think the letter says, "The impoundment does not of course contain DNBP from process waste; but that is not a RCRA hazardous material."

First of all, let's back up and get that. Would you agree with me that process waste of DNBP is not a hazardous waste?

A. I think we agree that it wouldn't be.

Q. Okay. And then again on February 21, 1985--this is Exhibit 10. I'll quote: "We believe the present use of the impoundment coupled with geologic, hydrogeologic and monitoring information gathered since 1981 indicate to date that the impoundment is probably not a RCRA hazardous waste management unit and additionally does not adversely impact the environment; nevertheless, we have deferred to the judgment of the Bureau of Pollution Control that the impoundment is a hazardous waste unit and are proceeding on that basis."

The central point I'm trying to make is that there's been a dialog between you and this company for some time that they didn't think this was a RCRA regulated facility, but they were going forward with the permit process. That's the only point I'm trying to make. Is that true?

A. If I could explain my position on that.

Q. Sure.

A. I would say the better characterization is there's been maybe miscommunication between the company and the staff here. Our belief--our position, I think I can summarize and say--is that the facility notified November 1980 that they were a handler, a manager, of hazardous waste. We have been going under that assumption. We have, as you pointed out, letters in the file from--I think it's Karkkainen if I'm not--have indicated that they do take exception as far as the de minimis rule.

That is something in my view--and I think George has pointed that out earlier; is the burden of proof is on the facility to do that. We have not received anything other than Mr. Karkkainen's suspicions or his thoughts on that. So while it's true we have received communication to that effect, we've never received any proof or--until today we've never gotten into that question. And so, I would maybe disagree with you in that the Bureau has said--had made the judgment: you must be regulated. More correctly,

I would say, that Vertac by notifying and by handling itself and managing itself as a hazardous waste manager and voluntarily complying with all the rules and regulations of the hazardous waste laws, and we not having any proof different than that, have been going on regulating Vertac until such time as y'all prove differently. Today, I suppose.

Q. In his opening statement today counsel for the State made the observation that only in the last couple of weeks has the company thought about not being a RCRA regulated facility when they discovered how much it was going to cost. I don't disagree that when we discovered some idea of what it was going to cost it certainly may have come to our attention.

But the point I'm trying to drive at is: Actually, that statement is not factually correct. The company may have made filings, Part A and Part B; but there have been verbal discussions and written communications between Mr. Karkkainen and you--Mr. Karkkainen taking the position that the surface impoundment is not a RCRA regulated facility. Isn't that correct, Chuck?

A. We have heard him in writing state that position.

Q. Okay. Now, Chuck, I got confused earlier when George was asking you your questions on whether or not the de minimis exception applied to this facility, and I'd like to ask you: Was I correct in saying that you don't believe

that de minimis applies to this facility because of the representations in the Part B that run-off or spills could occur in the return product area? Is that correct?

A. I think you have to--I would have to characterize whether those losses were representative of de minimis losses or not. I was basing that on the concentrations of our sampling not reflecting that to be de minimis.

Q. So you're saying de minimis is not applicable to the surface impoundment because why? I'm turning you loose here.

A. All right. Again, as I stated earlier, there are I guess two areas that I would broadly characterize as if--if there was a release of a hazardous waste, a RCRA regulated hazardous waste--and I'm not speaking of wastewater; but a RCRA regulated hazardous waste--and such release did get to the surface impoundment--and in my mind y'all have to prove to me that that hasn't been the case. I don't have to prove to you that it has happened. That's why I say the burden of proof is on y'all.

Q. Sure.

A. So if a RCRA regulated hazardous waste is released and mixes with any nonhazardous wastewater or wastewater, then the whole thing through the mixture rule is regulated. That's one scenario where the de minimis rule doesn't even come into play.

Q. Because why?

A. Because you've had a release of a RCRA regulated hazardous waste, not a process of wastewater or something like that. A specific example would be drum storage, hazardous waste drum storage. And the mixture of the release in that area---

Q. Let's stop---

MR. WILLIAMSON: The witness should be allowed to finish answering his question.

MR. SMITH: Sure. I'm sorry.

A. The mixture of such a release of a hazardous waste with a nonhazardous waste through the mixture rule makes the whole mixture a hazardous waste, and under the scenario then the impoundment could be regulated without even getting into the de minimis rule.

Now the second thing was process wastewater. Wastewaters that are talked about in the de minimis rule from leaks and spills and those types of things that are, according to the regulation, supposed to be small leaks and spills; and in reading the background documents as to how to interpret whether those spills have been small or large talks about whether there are high concentrations of the chemical product--dinoseb in this case. And our results of samples in the impoundment and in and around the area are in the hundreds parts per million and some are thousands of

parts per million, and those kinds of numbers. I'll have to say I will agree with Gary Dietrich that I'm concerned with those concentrations. He went through and calculated something that made him feel better about those concentrations. I share the same concern about those concentration levels. They don't appear on the surface to me as a regulator to be low concentrations of a acutely hazardous compound.

Q. So we have two basis upon which you have decided de minimis is not applicable. First of all, the concentration levels in the impoundment; and second of all, the potential of release of a RCRA regulated hazardous waste being received from the impoundment somewhere other than in de minimis quantities from the process operation. Is that basically correct?

A. Yes.

Q. All right. Let's look first at your first conclusion. You have presented today to my knowledge no evidence whatsoever that there has been a release of a RCRA related hazardous waste received by that impoundment other than through---

MR. WILLIAMSON: I'm going to object to the form of this question at this point, because he's saying "you have presented no evidence to this effect." Chuck is not the Bureau of Pollution Control. If he wants to restate his question to have you heard any evidence or something like

that; but it's not fair to ask this witness a question that should be probably asked of me, and I'm not on the witness stand.

MR. SMITH: I'll rephase the question.

HEARING OFFICER: All right.

BY MR. SMITH:

Q. Chuck, getting again to your point on in your determination that de minimis doesn't apply, you have no personal knowledge, to you, Chuck, of any release into the surface impoundment of a hazardous waste except through de minimis losses in the manufacturing operation; isn't that correct, Chuck?

A. Excluding testimony I've heard today?

Q. Your personal knowledge.

A. No, I don't think that I can say I've observed such a leak personally.

Q. And so a while ago when George asked you the basis for your opinion on the de minimis exception you talked about the testimony of David Lee concerning these 700 carbon drums. Is that the testimony on which you rely for your conclusion that there has been a release of a RCRA regulated hazardous waste into this impoundment other than through process operations?

A. I would say that the testimony of David--I don't know that I could say carbon drums. Those drums were sup-

posedly in the hazardous waste disposal or storage area; so I would say more correctly that his testimony on the potential releases from hazardous waste drums in the storage area that he observed, that would be my basis for making such a determination.

Q. Did you hear David say on cross-examination that he had no idea whatsoever whether or not those drums contained hazardous waste?

A. I did hear that.

Q. So if in point of fact David does not know whether or not those drums contained hazardous waste, you have no basis whatsoever on your first point for determining that de minimis is not applicable, do you, Chuck?

MR. WILLIAMSON: I'm going to object to the form of that question. If he wants to say you have no basis or based on personal knowledge, that's one thing; but Chuck's listened to the whole record and heard all this testimony. I think his question is improper.

MR. SMITH: And I've just asked Chuck as a predicate to the question I've now asked what testimony he's heard all day upon which he's made this conclusion, and he told me David Lee's testimony. He then agreed with me that David testified that he didn't know whether or not that was hazardous waste. The point I'm trying to drive at is that this witness has no basis under his first criteria for

deciding hazardous waste is not applicable for determining there's been any release hazardous waste into this surface impoundment.

HEARING OFFICER: You can testify to what your understanding is. The Commission can make up its own mind to whether there's been some kind of hazardous waste released into this compound other than processed released, based upon what they've heard today. You tell the Commission what your understanding is based on what you know and have heard.

THE WITNESS: I honestly don't have a--I don't have an analysis of that waste, so I can't say it was hazardous waste; only that it was stored in the hazardous waste storage area.

BY MR. SMITH:

Q. Okay. Now let's assume for a moment that the hazardous waste, or what David Lee said he didn't know whether was hazardous waste, was in fact not hazardous waste.

A. Um-hum.

Q. Then your conclusion that de minimis is not applicable in this situation is based solely on concentration which were revealed in your analysis; isn't that correct?

A. Is this a judgment question?

Q. No. I'm just trying to get at the basis---

A. Can I exercise my judgment, I guess is what I'm

saying, or do you want---

Q. Let me see if I can rephrase the question. I may not understand what you're asking me, Chuck, and I apologize.

A. All right.

Q. But you have a lot more knowledge than I do, and I'm probably asking the question in a confusing way. First of all, you told me there were two bases upon which you believed de minimis is not applicable. They are (1) potential release of the RCRA hazardous waste into the surface impoundment other than through process operation; and (2) the concentration levels that exist in the pond. Is that correct?

A. That's correct.

Q. All right. We've now I think come to the conclusion that as to number one you have no factual basis whatsoever to believe that there has been any hazardous waste received by the impoundment, and what I'm now turning to is therefore, assuming that there has been none, your decision is predicated solely on the concentration levels in the impoundment; isn't that correct?--and the other concentrations that you found in other areas of the plant.

A. Bill, the reason why I was saying me exercising a judgment, I believe that--I would agree. I have no personal knowledge of the contents of those drums. However, my judg-

ment is that if that drum storage area was maintained in that working order, such as there were leaks and spills, I would have to use some common sense and say it was set up as a hazardous waste storage area, and at some time hazardous wastes were stored there, and it would be my judgment that I have no reason to believe they weren't stored in that same manner where leaks and spills might have occurred under that same type of scenario, if hazardous wastes were ever stored out there. And y'all listed hazardous waste on your Part A in that drum storage area. So I have to believe at times they were. And therefore, if there were such spills--again, I don't have personal knowledge of those spills. But if that were true and those wastes did get to the impoundment, then my position is still clear, that it would be a regulated impoundment.

I don't have--again, it's in my mind the company's burden to prove to me that there were never any spills, that the soils out there don't contain levels which we have indicated that there are concentrations of these things out on the ground. I have no--my judgment is that could have come from that storage area. That's my position.

Q. I think I'm probably confusing myself. I think the testimony we've heard today is that presently none of the losses from either one of these two areas works its way to the surface impoundment.

A. That's---

Q. Is that your understanding of the testimony today?

A. What the testimony has said--we haven't reviewed the drainage diagrams completely, so I---

Q. Well you have no evidence at this point that people weren't telling the truth as to that, do you, Chuck?

A. Not at this point, no.

Q. Okay. So what you're basing your opinion on is that at that point in time when this drum storage area was not located where it is now, but back two or three years ago, for that little bitty window we're talking about between December 19, 1980, and the time when the drum storage area--let's get it this way, Chuck: Prior to November 19, 1980, it didn't make a lot of difference whether those losses into that impoundment for purposes of the issue we've got today--the losses have to be subsequent to November 19, 1980: correct?

A. That's correct.

Q. And we've been told in testimony by Mr. Keen earlier today that this drum storage area was removed two or three years ago to its present location. Is that not correct?

A. That's the way I understand it.

Q. So your opinion, Chuck, is predicated solely--and this is only what I'm trying to get to; that during that

little window of time there could have been a drop of hazardous waste from that drum storage area that worked its way into that surface impoundment, and therefore de minimis is not applicable. That's basically what you're telling us, isn't it, Chuck?

A. That's true.

Q. The point I'm trying to get at, Chuck, is that David Lee has told us he has no idea what was in those drums, and in 1980 you yourself admitted a few minutes ago that the whole regulated community was uncertain as to what was hazardous waste and what wasn't. In fact, there's some oompanies that used to require manifests, receiving companies, on products that you and I probably agree weren't hazardous waste. Isn't that a fact, Chuck?

A. That's probably true.

Q. So out of an abundance of precaution there could have been storage there of a product that is nonhazardous waste, and we certainly have no indication to the contrary today, do we, Chuck?

A. Evidence to the contrary, I guess--we don't have any sample results, I'd say.

Q. Now I want to go to your analysis of the concentrations in the pond. Chuck, I'm going to hand you what's been identified as Exhibit S-9, and as I appreciate it, that is the results of the analysis that was taken by the Department

in preparation for this hearing. Is that correct?

A. That's true.

Q. Now is the second page of that exhibit an indication of the samples that were taken from the surface impoundment?

A. They're contained on here, yeah.

Q. And the sample locations in the surface impoundment are limited--you only took three samples in the surface impoundment; isn't that correct?

A. That's correct.

Q. And really, one of them is at the intermit point; so you really only took two inside the surface impoundment, per se. Is that not correct?

A. One was of the effluent going into the impoundment; correct.

Q. And you only took one in Cell 1, one in Cell 2, and none in Cell 3. Isn't that correct?

A. That's correct.

Q. You would agree with Mr. Dietrich that a much greater sampling procedure would be necessary to come to any firm conclusions on the concentration levels that exist in that pond, would you not?

A. I wouldn't disagree with that. It always helps to have more results.

Q. Okay. Now the concentration levels that lead you

to believe that the de minimis exception is not applicable to this plant, are those limited solely to the samples that were taken in the pond?

A. I would say not necessarily; that some of the other sampling points might give us an indication of concentrations on the--in the soils around the plant which might be indicative of losses.

Q. So based upon this document, or these analyses, you come to your conclusion that de minimis is not applicable because of the concentration levels found; is that correct?

A. Yes.

Q. There's no other analysis upon which you base your decision.

A. That's true.

Q. Let's talk about the sample results just a second, and we'll pick one out here. Let's talk about this Sample G, which as I appreciate it on here was taken at the--is that the bulk loading area?

A. No. That's the DNBP production building.

Q. Okay. Let's assume for a second that there's some sort of hose or flange hookup in that building. I suppose that's where they load product into the drums they sell commercially?

A. I don't know that I can answer that.

Q. You really don't know about the process.

A. No.

Q. Let's assume for a second that there's some sort of flange in there and that you came in to take your samples immediately after there had been a process leak. Wouldn't it be fair to assume, Chuck, that you expect a concentration in that sampling of 900,000 parts per million if you came in immediately after the spill, wouldn't you, Chuck?

A. Well, a high concentration.

Q. And if you came in a day later it's going to be lower, isn't it?

A. I couldn't answer that.

Q. Would you normally expect it to be lower after a day's time had past; the product had had an opportunity to spread out, to dilute to the extent it would?

A. It seems reasonable.

Q. And then if you came a week later and it had rained during the interim you would expect it to be even lower; isn't that correct, Chuck?

A. It seems reasonable.

Q. So unless we knew the circumstances under which these samples were taken, the concentration levels in the samples are fundamentally meaningless, aren't they, Chuck?

MR. WILLIAMSON: I'm going to object at this time because counsel opposite stipulated when we introduced that

stuff that they were sampled according to proper procedures, et cetera, and if we want to we'll get Kay to go back and read the record. He's now at this point attempting to impeach the data which he already has stipulated into evidence, and I'm just interposing that it's just simply too late to make such an attack on that data. He's already stipulated to it.

HEARING OFFICER: I don't think he's impeaching the numbers. It appears that he's trying to establish something about the point in time that the numbers are derived. Go ahead with your question.

MR. SMITH: I think what we're impeaching is not the numbers, but the interpretation of the numbers. Let me see if I can finish it. I may be so stupid I'm not doing a good enough job convincing anybody of what I'm trying to do; but that's what I'm trying to get at.

BY MR. SMITH:

Q. The fundamental point I'm trying to make, Chuck, is that you can't isolate the analysis, numbers, that you've got the concentration numbers alone; that in order for you to make an evaluation of the type you've made you've got to know a great deal more than just that concentration level. You've got to know when the spill occurred. You've got to know how much time has passed. You've got to know whether or not it's been cleaned up or rain has occurred. Isn't

that a fact?

A. That's true, and that's why, as I said before, the burden of proof is on the facility. The only thing we were trying to do with those analysis were to give us some kind of feel for the losses in the facility. I'll agree with you, we could have spent days over there sampling the site. WE had a limited amount of time to do it in; a limited amount of resources. We tried to cover as best we could with that kind of resources those areas that we felt had some--connected to a source that could give us information about de minimis.

So, yes, more time and more resources we could do a better study. In fact, y'all could do a better study and convince us that these were--I'll say this: that in just using common sense every sampling point that we took in my opinion had significant levels. And so, it would appear to me that if there were hot spots we would see that in some areas, other areas we'd see nothing; but just about every area we sampled had significant concentrations; therefore, I will tend to make a general statement that we couldn't have, as Bill insinuated, just hit those hot spots and nothing else. All the levels were of concern, and that's all I can say.

Q. Let's put it this way, Chuck: Let's say you had a spill of one ounce of the DNBP product, and I think you'll

agree with me that's not very much

A. Right.

Q. And let's assume that that one ounce had occurred, the spill had occurred one time at that particular site where you took your sample. Now can you look at the concentration levels and tell, extrapolate backwards, to how many ounces of DNBP resulted in the concentration levels that were present in the analysis you took?

A. I doubt it.

Q. So you really don't know what sort of concentration should have been found for a one-ounce drip that occurred once a day from a leak, do you, Chuck?

A. No, not really.

Q. All right. So let's go down to the pond for a second. You haven't extrapolated back out of the concentrations in that pond how much loss of DNBP would be necessary in the manufacturing operation to get the concentration levels that you found in the pond, did you, Chuck?

A. I haven't made those calculations, no.

Q. Okay. And isn't it therefore, Chuck, fundamentally impossible to come to a conclusion on the basis of these concentrations as to whether or not they resulted from de minimis losses in the plant, Chuck? If you haven't made the fundamental extrapolation process calculation backwards, the concentration numbers standing alone are meaningless,

aren't they?

A. I think that's a matter of judgment, Bill, and I'll share that judgment. I feel--I believe that the concentration levels are indicative. We have 8 parts per million coming out of the effluent pipe, and those concentrations--just looking at our past historical regulation of that facility, there are concentration levels, toxicity levels, of impact to fish and other type things that are below those concentration limits. So that tells me--you're trying to use just common sense here--that there are concentrations in the impoundment derived from sources somewhat unknown at the facility that if exposed to the environment pose harm and danger to aquatic life or anything else.

Q. We'll come to the risk assessment in a minute.

A. Okay.

Q. Let me ask you this way, Chuck: In point of fact let's assume that all the losses of the DNBP had been de minimis, and let's assume that they have been processing DNBP in that plant for 13 years. What I'm saying to you, Chuck, is that you have no idea what concentration levels under those circumstances would be found in that pond, do you?

A. I don't, and the burden of proof is on y'all to demonstrate that.

HEARING OFFICER: Just a moment.

[OFF THE RECORD]

BY MR. SMITH:

Q. Chuck, going back to the sampling awhile ago, DNBP identifies itself pretty clearly when it hits that ground over there at that plant, doesn't it?

A. That's my understanding, yes.

Q. And so you can pick out the hot spots for sampling purposes pretty easy, can't you?

A. If that was your intention, yes.

Q. So as far as you know, when your people went over and sampled, they didn't go sample from the nonyellowed areas, did they, Chuck?

A. Bill, to be honest, it's my understanding a lot of it's everywhere, so I didn't--no, I did not instruct them to go to the nonarea or--the instructions were to go to the general sources that could potentially drain to the impoundment. That's what we were interested in, was what concentrations in these general areas could be to the impoundment. So we didn't go out and take samples from areas that wouldn't drain to the impoundment.

Q. Does DNBP have a high affinity for soil?

A. That's my understanding.

Q. So basically Mr. Dietrich's testimony to the effect that the loss of the water itself out of the impoundment would relatively speaking not carry very much of the

DNBP because of its affinity back into the settlement in the bottom of the pond; isn't that correct?

A. Bill, that would have to depend on the circumstance, depending on what type of situations were occurring at the time of the release. If you had low flow in the impoundment--in the creek, I think you would have a fish kill. If you have high flow, which was the case when the impoundment broke, breached--there was a flood, there was a huge flood. Obviously it was diluted. There was no fish kill. It depends on the type of release situation, so I can't speculate that.

Q. But they, as far as you know, inspect this levee daily, don't they, Chuck?

A. That's the requirement of the regulations to inspect it daily. I haven't personally---

Q. The only time we've lost any water out of the service impoundment has been a flash flood sort of arrangement; isn't that correct?

A. There is an inspection that was done just recently and I don't know that it's been introduced as evidence, but where inspectors saw signs of a spill on, I think it was the southeast corner of the impoundment, and I don't know--I don't know that I could testify to the circumstances; but I've seen in our file where there has been mention of a spill.

Q. I think I know the answer to that; but maybe I'll rephrase the question. There's been no significant loss of surface water out of the surface impoundment except in February 1983 when the levee broke; isn't that correct?

A. That's correct.

Q. At that time there was no fish kill, was there?

A. Not that we documented.

Q. And there was something like 700,000 gallons of water lost out of that pond; isn't that correct?

A. That's the figure I understand.

Q. Chuck, as I appreciate it, you are an environmental engineer; is that correct?

A. That's my title, yes.

Q. You have no formal education in health risk assessments, do you, Chuck?

A. Not other than working--on-the-job training.

Q. Okay. But you have no--they offer degrees in public health and things of that nature---

A. That's right.

Q. ---and you don't have such a degree or anything, do you?

A. No, I don't.

Q. Have you performed a great number of risk assessment programs formally in the past?

A. I've reviewed risk assessment documents or--yeah,

documents. I haven't---

Q. Have you ever prepared any?

A. I have not prepared one, no.

Q. So your whole knowledge of risk assessment comes through sort of an absorption process of reviewing other risk assessment documents prepared by others; is that correct?

A. That's a good description.

Q. Now, Chuck, let's talk about the concentrations in the pond just a second. In order for those concentrations to be--pose any risk to human health and the environment, they've got to have a pathway, don't they, to--an exposure point? I mean sitting in a pond, per se, the concentrations as long as they stay in that pond are fine, aren't they?

A. That's true and that's what the regulations were designed for: to regulate that and control it--control pathway.

Q. And I believe that the closest drinking water well to this particular site is over two miles away; isn't that correct?

A. I could agree to a mile anyway. I don't know two miles exactly. I'm not familiar with that.

Q. Are you familiar with a document called the PA/SI?

A. Yeah, um-hum.

Q. And did you complete a PA/SI in connection with

this facility?

A. Yes.

MR. SMITH: George, I have gotten one that's written up. I've got some marks and what not on it. With your permission I'd like to have Chuck identify this, get it introduced and then substitute a clean one. This is simply a copy of y'all's PA/SI.

MR. WILLIAMSON: Chuck, is that what this is?

THE WITNESS: It's called a Preliminary Assessment or Sight Investigation Form, is what PA/SI stands for.

MR. WILLIAMSON: Is that something out of y'all's files?

THE WITNESS: This is something that--yes. In our administrative work EPA we complete these documents.

MR. WILLIAMSON: I don't have any objection to introducing that.

[DOCUMENT MARKED CEDAR EXHIBIT 11, APPENDED HERETO.]

BY MR. SMITH:

Q. This that you've identified, I think it was actually prepared by you.

A. That's correct.

Q. I want you---

A. If I can remember back that far.

Q. I want you to flip over with me to Subpart E(2)c

where the entry is made which appears to me to indicate that the aquifers that--from which drinking water sources could be taken are located--what?--within a two mile radius of the facility?

A. That--yes, that's the way the form is completed. If there is contamination within that--outside of that area---

Q. So what this says is there's no drinking water within a two mile radius of the facility; isn't that correct?

A. That's what this document says.

Q. Okay. So when we talk about pathways, for the concentrations to do harm to human health and the environment through groundwater *monitoring*--through groundwater--at least insofar as humans are concerned those concentrations would have to migrate through the groundwater for over two miles, wouldn't they, Chuck?

A. That is--Bill, so far as that document is concerned that's true at the time of that. I don't know that we have any subsequent information to refute that at this time. I mean, there may be--through discovery there may be some other; but yeah.

Q. But you agree with me that based on the data that you now know, the likelihood of that occurring is extremely remote?

A. We don't have any current knowledge that there's anything--that that isn't correct.

Q. But wouldn't you agree with me that the likelihood of it being contamination into the drinking water at a near point of withdrawal from that service impoundment is extremely remote?

A. It would take an extremely long time for contamination to get there.

Q. If it occurred at all.

A. Okay.

Q. And as DNBP I suppose moves through the groundwater it's diluted more, isn't it?

A. That's generally the way hydraulics work, yeah.

Q. So based on your expertise wouldn't you agree with me that it's highly likely that over the long period of time that you're talking about, even assuming that DNBP would move, that it would be in concentrations far below what's in that surface impoundment?

A. Yes, it should be at levels below the surface impoundment.

Q. So---

A. Now, I qualify that by saying we don't have complete knowledge of all the sediments and water analysis in that impoundment. But, you know, using hydraulics, yes, it ought to be lower than the highest concentration in surface

impoundment.

Q. And that series of questions to get to what kind of risk to human health and environment exists by virtue of that surface impoundment, of course, assumes that there is going to be any leaking of DNBP from the surface impoundment. And yet, we've got this surface impoundment completely encircled with groundwater monitoring wells and every down-gradient well shows no movement whatsoever, doesn't it, Chuck?

A. *Down-gradient wells.*

Q. Okay. And out of the 12 wells that have been drilled or 14--how many?

A. I think there is 14 that's in the neighborhood. I don't have that figure right at hand.

Q. With the exception of Well 1 and 1A, which is basically an off-set to 1, there's been no evidence of any contamination whatsoever; isn't that correct?

A. There--of DNBP or anything?

Q. Well, DNBP, which is what we're talking about in the surface impoundment.

A. All right. To date that's true. There's more work being done, but to date that's all the information, is that 1 and 1A are showing DNBP.

Q. Okay.

COMMISSIONER TRAVIS: Counsel, what difference

does this whole line of questioning that you've just been undergoing have to do on the question of whether or not this company is subject to the de minimis requirements of Sub-section D of 261.3?

MR. SMITH: I'd argue that it has none; but in the opening statement arguments that were made by the State one of the arguments that they advanced is that because of some language isolated in the preamble one of the considerations is any risk of significant harm to human health and the environment. And through this line of questioning what I've attempted to show is that the concentration levels that exist in that pond do not pose any threat to human health and environment, because the only way it can get to humans is through groundwater, if it can get there at all, and that, according to what I'm told and what Mr. Estes has testified to, is just extremely remote. So I would agree with you it's not relevant, Mr. Travis, but I was trying to cover in the record what I think is an argument I may hear down the road.

If we can have just a second. [CONFERRING] That's all I have for the moment.

HEARING OFFICER: Any redirect, George?

MR. WILLIAMSON: Yes, sir.

REDIRECT EXAMINATION

BY MR. WILLIAMSON:

Q. Mr. Estes, you are aware that Mr. Dietrich on behalf of Vertac, they took their own sampling data; is that correct?

A. That's true.

Q. Didn't you hear Mr. Dietrich tell the Commission today that their data was comparable with our state data?

A. I did.

Q. Based on those samples, those concentrations that you've seen and after the questioning that you've gone through here from Mr. Smith, do you still feel that this facility has a potential of endangering the environment--the concentration of that facility has the potential of endangering the environment?

A. I still feel that those concentrations are of regulatory concern.

Q. Okay. I want you to explain to the Commission, for the benefit of any of them that don't understand, why concentrations in the wastewater facility over there are material to the issue before us. I'm going to ask you to read from Exhibit S-2, in the second column starting with "By so restricting...." Identify that document, please, if you would, sir.

A. Exhibit S-2. It's the background document for the de minimis rule and promulgated in the Federal Register. "By so restricting this amendment, the agency believes it is

limiting the mixture rule exemption to wastewater mixtures that contain very small concentrations of 261.33 materials and concentrations unlikely to pose a substantial hazard to human health and the environment."

Q. Based on what you just read then, one can conclude that if the concentrations are not small and if they do pose a threat to the environment that the de minimis rule was not anticipated to apply to those; is that correct?

A. That's true.

Q. Now we've heard a lot of talk about wells two miles downstream. Does groundwater migrate quickly or slowly?

A. It depends on the situation. It can be a slow-moving process or a fairly rapidly---

Q. But in times of--not like geological time intervals, but in times of what a human normally subjects itself to is it safe to say groundwater migrates slowly?

A. Yes.

Q. Well isn't it an objective of our regulatory scheme to protect our progeny?

A. That's correct.

Q. And that might be 100 years or 200 years?

A. That's correct.

Q. Is that not an underlying philosophy of the whole RCRA program, to protect the groundwater resources of this

country?

A. That's correct.

Q. The fact that there is no contaminants in a well two miles downstream, or there's no well within two miles, is that dispositive of the issue--is that dispositive of the issue of whether or not the de minimis exception applies to this facility?

A. No.

COMMISSIONER TRAVIS: What's dispositive is whether or not the concentrations in the run-off pond are high enough to be outside of the de minimis rule. If they are, and in your judgment you testified that they are, then the company will not qualify, and they will be regulated under RCRA. If they are not so high, if they are in fact de minimis, then the company would qualify and it makes no--I mean, it really is immaterial whether the groundwater may or may not be 200 years from now affected two miles down from this plant.

MR. WILLIAMSON: Exactly.

THE WITNESS: That's correct, Mr. Travis. We have many facilities in the state where no groundwater contamination has been indicated today. We, of course, hope it never does. They're still regulated by RCRA.

COMMISSIONER TRAVIS: I understand that, and that's the point I'm trying to make. We really need to get

back to what is really at issue here, and that's whether this company meets--the movant meets the requirements of this statute and its regulations and interpretations or not. I think that's where we started at nine this morning.

BY MR. WILLIAMSON:

Q. Mr. Estes, I want to show you Exhibit S-1, and can you identify that quickly?

A. Yes. This is an inspection report by David Lee.

Q. Over here under the sector that is marked 402.7-173, does that state that that deals with hazardous waste?

A. It states that "Containers holding hazardous waste must be kept closed and must not be opened, handled, or stored in a manner which may cause a rupture or leak."

Q. Are you aware of Vertac ever denying that there was hazardous waste stored at this facility on the date of this inspection?

A. I wasn't---

Q. Are you aware of any denial---

A. No, I'm not aware of any denial.

Q. I'm going to show you Vertac's Exhibit 10 and ask you to read the first full sentence of paragraph two. Reading from Exhibit 10, Vertac's Exhibit 10, read the first full sentence from the paragraph number two.

A. "The purpose of the impoundment is to collect rainwater run-off from the south plant and serve as a spill

collection system in the south plant (spills will flow through the drainage system to the impoundment or will flow to a sump and be pumped to the impoundment)."

Q. Doesn't that sentence anticipate that the impoundment is going to collect rainwater run-off from the south plant?

A. Yes.

Q. I'll show you Vertac's Exhibit 9, which they introduced. I want to ask you to read from the second paragraph and I want you to read the full sentence.

A. "All we have to do is revise process sewer drains and provide adequate concrete spill containment around our DNBP process, formulating and packaging areas such that DNBP spills and water used to clean up the spills will be contained locally and not drain to the surface impoundment."

Q. Okay. What's the date of that letter?

A. December 20, 1984.

Q. And does that letter not indicate that they had not completed constructing this concrete containment area?

A. That seems to---

Q. Hasn't the company indicated all day the extreme cleanliness with which this plant is operated and that everything is contained within concrete?

A. Yes.

Q. Did you ever hear them tell the Commission that as

late as 1984 they hadn't completed all the concrete?

A. I don't know that--I don't think that I heard that.

Q. Okay. That's what I want you to say.

A. I don't remember anything at this point.

[LAUGHTER]

MR. WILLIAMSON: I'd like for the record to reflect that he said substantively no.

BY MR. WILLIAMSON:

Q. Is that correct or is that incorrect?

A. Yeah. I don't remember hearing that.

Q. Okay. Chuck, there is one thing I am a little confused of. The dialogue that was referred to earlier and mentioned--I guess exhibited by Exhibits 9 and 10 of Cedar--did that dialogue actually mention the de minimis exception? Did that ever come up? Do you want to look at these?

A. Yeah. You're saying that in these letters--this letter explicitly represents de minimis?

Q. Yes.

A. Or the de minimis rule.

Q. Yes.

A. [EXAMINING DOCUMENT] I may be missing it, but I don't see the word in reference to de minimis rule or explicitly stating de minimis rule.

Q. If someone characterized DNBP as acutely toxic,

does that term "acutely toxic" mean anything particularly to you?

A. Under the regulations if a waste is listed as acutely toxic there is a lower amount--in this case, 2.2 pounds--of waste that could be disposed of or generated which would deem it a hazardous waste as opposed to what originally was 2200 pounds. So it just means that it takes less of that material--if it's acutely hazardous, it takes less of that material to be of regulatory concern.

Q. The company has talked about their protective filing. They never apparently raised any objection to their protection filing until these letters in 1984, which is shown as Exhibit 9 as Cedar's. Is that correct?

A. That I'm aware of, that's correct.

Q. So it took them four years to ever decide that there was some reason for them not to seek protection.

A. That would be---

Q. Is DNBP soluble in water?

A. Yes.

Q. What's the parts per million it's soluble up to?

A. I don't have the figures. I think it's 59--in that range.

Q. Would it be fair to say approximately 50?

A. That would be close enough, I suppose.

Q. Okay. Now knowing that DNBP is soluble in water

column to approximately 50 parts per million, does that give you reason for additional concern based on the sampling, which is comparable to Mr. Dietrich's sample, shown in Exhibit S-9?

A. Well, yes, that could be a further area of concern; that these levels are exceeding the solubility, general solubility levels of DNBP, which would indicate concentrations that could continue to leak, continue to pose a threat, I suppose.

Q. You're aware that the impoundment suffered a breech in February of 1983?

A. I'm not sure of the date, but that's generally---

Q. Is it possible that the impoundment could suffer another breach at any time in the future?

A. Anything is possible. The dike---

Q. The fact that the impoundment could breech again, is that also a reason why this might be a potentially hazardous site?

A. All impoundments can leak or breech or--you know, a leak to the groundwater. That was the intent of the regulations, to regulate land units because of the obvious contact with land--with soil, and soil is not an impervious barrier. That's the intention of the regulations, was to regulate it; try to monitor the groundwater; monitor the integrity of the dikes; monitor any potential spills from

that source, so that it can't impact human health or the environment.

Q. Considering the de minimis exception rule, is it not more important where the waste comes from as opposed to the risk assessment of a particular impoundment as to determine whether or not the de minimis exception applies?

A. You may have to repeat that. I didn't hear the very first part, George.

Q. Concerning whether or not the de minimis exception applies to a particular facility, is it more important to consider the source of the waste going into that impoundment or some percent of risk that the impoundment might breech itself? Which of those is more important?

A. I think you have to look at the potential harm for releases and---

Q. You don't consider the sources to be important?

A. For determining where the losses were and the source--you have to understand the source before you can make a decision as to de minimis. So, yeah, you would have to know what the sources were and whether they were contributing significant quantities of waste under the regulations.

Q. If the source of run-off that gets into this impoundment comes from surface run-off from non-de minimis losses, does it matter what the risk or failure of that impoundment is?

A. No.

Q. It's totally irrelevant, isn't it?

A. Right. I--exactly. Your previous question was more to concentrations. I would--you're speaking about--if I can clarify this, you're speaking of losses that are not from the process wastewater and that type of thing. It's RCRA regulated waste. That would be correct.

Q. So if the source of the wastewater is from a RCRA regulated source, such as run-off from a nonprocess area, if it gets into the impoundment it's totally irrelevant about the riskiness or nonriskiness of that particular impoundment.

A. Under the regulations that's correct.

Q. Doesn't the Bureau of Pollution Control every day regulate impoundments which may or may not rupture?

A. That's true.

Q. Don't you every day regulate tanks which may or may not rupture?

A. That's true.

Q. It is an irrelevant factor of whether or not a tank or lagoon may or may not rupture as to whether or not it's regulated.

A. Really, that's part of the reasons for the regulation; to ensure against that.

MR. WILLIAMSON: That's all I've got.

RECROSS EXAMINATION

BY MR. SMITH:

Q. Chuck, let me just clear one thing up for the record.

A. Okay.

Q. There were no water samples which you took which exceeded 8 parts per million; is that correct?

A. Could I look at the samples of---

Q. All of the other samples, I believe, are nonaqueous, liquid, soil or sediment samples.

A. There were some water samples from sumps and--in the area. Is that not what you're talking about?

Q. I'm talking about out of the pond.

A. Out of the pond. Okay. Can I look at that for just a minute?

Q. The point I'm trying to make is the water samples didn't exceed 8 parts per million; the samples that exceeded it were nonaqueous, liquid, soil or sediment samples.

A. I can agree with that.

MR. SMITH: Okay. Thank you.

[WITNESS EXCUSED]

HEARING OFFICER: We're going to take a 10-minute recess.

[RECESS TAKEN FROM 6:05 TO 6:15 P.M.]

[PHOTOGRAPHS MARKED AND ENTERED INTO EVIDENCE AS EXHIBITS S-13 THROUGH S-18, APPENDED HERETO.]

HEARING OFFICER: Proceed.

MR. WILLIAMSON: We will call Mrs. Beverly Spagg.

BEVERLY SPAGG,

having first been duly sworn by the court reporter, was examined and testified on his oath as follows, to-wit:

DIRECT EXAMINATION

BY MR. WILLIAMSON:

Q. State your name for the record, please, ma'am.

A. Beve[illegible] Spagg.

Q. What do you do for a living, Ms. Spagg?

A. I'm a supervisory environmental scientist. I have direct permitting responsibility for the State of Alabama and oversite in Mississippi.

Q. Where do you work?

A. I work for the U.S. EPA in Atlanta, Georgia.

Q. What region is that?

A. That's Region IV.

Q. Is that the region that oversees Mississippi?

A. Yes, sir.

Q. How long have you been in that capacity?

A. Three years.

Q. What's your educational background?

A. I have a Bachelor of Science in biology.

Q. As a part of your responsibilities have you had occasion to become familiar with what we might call the de minimis rule exceptions?

A. Yes, I am.

Q. Are you familiar with the preamble?

A. Yes, I am.

Q. I'm going to show you what's been marked as Exhibit S-2 and ask you to identify that.

A. It's the preamble dated November 17, 1981. It thoroughly discusses mixtures of wastewater and discarded commercial chemical products under 40 CFR 261.33.

Q. Is it also part of Exhibit S-2 that includes regulations?

A. It's the preamble. [EXAMINING DOCUMENT] Yes, it includes regulations.

Q. Ms. Spagg, do you have an opinion as to whether or not the de minimis exception applies to the impoundment at Vertac Chemical Corporation shown on Vertac Exhibit 3 as south impoundment pond?

A. I'll qualify it as an opinion.

Q. Go ahead.

A. And that's all it is. No, I do not believe that the de minimis rule is applicable at Vertac Chemical.

Q. Tell the Commission why.

A. Basically, I'm in concurrence with what Mr. Chuck Estes had expounded upon, and that is two-fold: One, we had analytical data and the company has analytical data which appears to support more than de minimis losses to that surface impoundment; and secondly, we have evidence that indicates that there have been spills of dinoseb to the impoundment.

Q. If spills of dinoseb had gotten to the impoundment by run-off, then the concentrations of the materials contained in the impoundment are irrelevant; is that correct?

A. That's correct.

Q. When you mentioned that we have evidence that spills have occurred and so forth, exactly what evidence were you thinking about?

A. Well, Mr. David Lee's testimony earlier; the recent inspection report conducted by EPA's compliance staff, and the photographs that they shared with me before my coming over today. Those aren't the EPA photographs.

Q. No, they aren't. Go ahead and finish.

A. I don't have them available.

Q. I want to show you what's marked as Exhibit S-13, 14, 15, 16, 17 and 18. These are photographs. I'll ask you to take a look at those photographs if you will, please, ma'am. [WITNESS EXAMINING PHOTOGRAPHS]

Have you reviewed those exhibits I handed to you?

A. I think I looked at them.

Q. Do those photographs look similar to the ones that you've seen at EPA?

A. The ones that I viewed at the EPA Region IV office appear to be worse than these. There was considerably more--I would assume it was kitty litter mixed with what appeared to be spill area and appeared--appeared very thick, quite honestly.

Q. Referring to Exhibit S-14, would that photograph in your opinion indicate an area that might have significant spills that might have occurred?

A. If discoloration is an indication then I would say yes.

Q. Is discoloration an indication of DNBP spillage?

A. My understanding of it is that it would be.

MR. WILLIAMSON: Ms. Spagg, that's all I have. Thank you.

CROSS EXAMINATION

BY MR. SMITH:

Q. Ms. Spagg, I don't think, with the exception of a brief conversation yesterday, we've ever met. I'm Bill Smith. Have you done any colorimetric analysis on DNBP?

A. No, sir.

Q. Are you aware of the fact that it was originally developed as a commercial dye?

A. No, sir.

Q. So you don't know what concentration levels of DNBP would result in what discoloration either on ground or cement pad, do you?

A. That's correct.

Q. When you look at these pictures to form your opinion as to whether or not the losses have been greater than de minimis, you really don't have any factual basis when saying discoloration proves to you that these losses are more than de minimis, do you?

A. That's right.

Q. You also told us it's your concurrence with Mr. Estes that application of de minimis was predicated on Mr. David Lee's testimony. Is that correct?

A. Would you rephrase the question.

Q. Your opinion that de minimis exception is not applicable is based in part on the testimony that was delivered today by Mr. David Lee; is that correct?

A. I referenced Mr. David Lee's inspection report earlier to form some of the basis of my opinion that there have been significant releases to the impoundment, so that was separate from the de minimis---

Q. I understand what you're saying. Your conclusion therefore that the surface impoundment is a RCRA regulated facility is predicated in part on Mr. David Lee's testimony;

is that correct?

A. That's correct.

Q. And you are aware of the fact that Mr. Lee has no idea whatsoever whether or not there was hazardous waste contained in these drums that's been discussed; isn't that correct?

A. Only from the standpoint that he didn't physically open them. The documentation that he holds back in the state office here with regards to the records that the company submitted, and also the inspection reports that the company themselves keep at the facility, would give them pretty good information on whether in fact that was hazardous waste that he was inspecting that day.

Q. So if he testified to the effect that he had no idea, then no such documentation exists, does it?

MR. WILLIAMSON: I'll object to the form of that question. What Mr. Lee would have had to testify to is based on his personal knowledge, and that's the way I recall his statement.

HEARING OFFICER: Try to rephrase that question again.

BY MR. SMITH:

Q. Ms. Spagg, I think it's a pretty simple point. The point I was trying to drive at is that Mr. Lee told us earlier today that he personally had no idea whether or not

there was any hazardous waste in the drums that he discussed. Do you recall that testimony?

A. Yes, I do.

Q. So if in fact there was no hazardous waste in those drums we've eliminated one of your basis from which you've determine that the surface impoundment is a RCRA regulated facility, haven't we?

A. Only from the standpoint he does not open up the drums. It's not part of the inspector's responsibility to physically open the drums to observe what actually is in the drums; but the regulations are structured such that the paperwork would be at the facility for Mr. Lee to be able to make that determination intelligently.

Q. You would agree with me if that were drums that contained clean carbon that wouldn't be a hazardous waste, wouldn't you?

A. Yes, sir.

Q. And he told you he didn't know whether they did contain clean carbon or not; isn't that correct?

A. Yes, sir. He also indicated that he never saw clean carbon stored in drums on a hazardous waste pad. I may be paraphrasing a bit; but he did indicate that.

Q. Well, we may have a different regulation. We'll let the record speak to that. So two of the bases upon which you have come to your conclusion that this is a RCRA

regulated facility is Mr. Lee's testimony and the photographs we've discussed. The third one is the recent EPA inspection report. Is that in evidence?

A. Yes, sir, it is.

Q. Do you happen to know the exhibit number on that?

MR. WILLIAMSON: Do I?

MR. SMITH: Do you know, George?

MR. WILLIAMSON: No, but we'll get it if you'd like to look at it.

MR. SMITH: Please.

[EXHIBIT TENDERED TO COUNSEL SMITH]

BY MR. SMITH:

Q. What concentrations of DNBP would exist in the surface impoundment after 13 years of operation averaging a million pounds of DNBP a year--could we expect to find in that surface impoundment?

MR. WILLIAMSON: I'm going to object to the form of that question. There's been no predicate laid for this witness to make such a determination. I know of no study she's done. I don't know of any that Mr. Smith has put into evidence that she would have any base upon which to form such an opinion.

MR. SMITH: We'll certainly--if they'll stipulate to the fact that she has no basis on which to form an opinion with respect to that, we'll withdraw the question.

HEARING OFFICER: Go ahead and ask the question and if you do not have any idea---

MR. WILLIAMSON: I would stipulate to the fact that there's been no predicate laid for her to testify to that specific question. I'll stipulate to that.

HEARING OFFICER: She can answer the question. If her answer is that she doesn't have an opinion or that she doesn't know, then she can answer such.

BY MR. SMITH:

Q. I think we can do that very quickly. You haven't done any studies which extrapolate back those numbers, have you?

A. No, sir.

Q. Are you familiar with the Superfund reportable quantities for the spills of hazardous material?

A. I know that such a requirement exists. I don't have specific numbers.

Q. Are you aware of the fact they set 1,000 pounds for DNBP?

A. No.

Q. Well let's assume for a second that they have in fact established 1,000 pounds for DNBP for reportable quantities of spills of hazardous material. That would mean that you must spill more than 1,000 pounds before EPA under CERCLA feels there's any real concern; is that correct?

MR. WILLIAMSON: I'd like to make an objection for the record. There's been no predicate laid that this witness even works in the field of CERCLA with its Superfund, and until Mr. Smith can show that the witness has some background in Superfund, questions asking for her opinion are totally inappropriate.

HEARING OFFICER: There's been a lot of opinions given. The objection is noted in the record. Now go ahead.

BY MR. SMITH:

Q. Beverly, how many times have you been on this plant site?

A. I have not been to the plant.

MR. SMITH: That's all.

HEARING OFFICER: Does the Commission have any questions? Any redirect, George?

MR. WILLIAMSON: Yes.

REDIRECT EXAMINATION

BY MR. WILLIAMSON:

Q. I'm going to show you Exhibit S-1 and refer you to a section marked 402.7-173. Is that the report of Mr. David Lee?

A. It looks like it.

Q. Does that report indicate there's dark or black material oozing from drums?

A. Yes, it does.

Q. Would you think that clean carbon would cause dark material to ooze from a drum?

A. I wouldn't think so.

Q. Would you think that clean carbon, as worded by Mr. Smith, would cause drums to deteriorate?

A. No, sir.

MR. WILLIAMSON: That's all. Thank you.

RECROSS EXAMINATION

BY MR. SMITH:

Q. What evidence exists in that report that the carbon caused the drums to deteriorate? Isn't it a fact that there's no such evidence?

A. The drums, according to that report, were containing hazardous waste.

Q. No, I don't think that's true. We're jumping from point A to point B. What the report says is: "A number of drums containing carbon were rusted through; some oozing dark liquid. Most were on concrete pavement. Many drums obviously in a state of advanced deterioration. Approx. 700 drums total."

A. That's correct. If the carbon was spent carbon containing dinoseb it is a RCRA hazardous waste.

Q. And if that wasn't spent carbon and didn't contain dinoseb it wasn't hazardous waste, was it, Ms. Spagg?

A. If it was pure carbon, no, sir.

Q. And we don't know what it was, do we, Ms. Spagg?

A. We know what the company indicated it was and what our records show it to be.

FURTHER REDIRECT EXAMINATION

BY MR. WILLIAMSON:

Q. I want to refer you back to this section indicated on Exhibit S-1 and 402.7-173--read under "Requirement" what it says.

A. "Containers holding hazardous waste must be kept closed and must not be opened, handled, or stored in a manner which may cause a rupture or leak."

Q. Okay. Does pure carbon ooze from drums? Would you expect pure carbon to ooze from a drum?

A. My understanding of pure carbon is that it's in a solid form.

Q. And how did Mr. Keen say it was delivered to the plant?

A. I don't remember.

Q. I'm going to show you Exhibit S-4 and ask you to read to the Commission--tell the Commission what that is, if you recall.

A. It appears to be the finding of the interim status inspection conducted on July 27, 1981. The letter was sent on August 10, 1981.

Q. Is that a transmittal letter sending the David Lee

report to the company?

A. Yes.

Q. Okay. Does that letter indicate a leaking drum and so forth?

A. Yes, sir, it does.

Q. Does that letter indicate that they're under Mississippi hazardous waste management regulations?

A. It indicates they're in a noncompliance status.

Q. Does it also indicate they're under the Mississippi hazardous waste management regulations?

A. Yes, it does.

Q. Does it indicate that a copy of the report was transmitted with that letter to the company?

MR. SMITH: Your Honor, just for the sake of brevity I'd like to object on the basis that whatever is in the letter is in the letter, and the letter speaks for itself. This lady didn't write it, she didn't receive it, and I don't see how she can comment on what's in it.

MR. WILLIAMSON: She's reading it.

BY MR. WILLIAMSON:

Q. Go ahead.

A. "Enclosed is a copy of the inspection report. If you have any questions concerning this letter, please feel free to contact us." It's signed by David Lee.

Q. Is there anything in Exhibit S-4 that says any-

thing about pure carbon?

A. No, sir.

Q. But there is plenty in Exhibit S-4 that indicates hazardous waste.

A. Yes, sir.

Q. And there's plenty in Exhibit S-1 which talks about hazardous waste.

A. Yes, sir.

Q. Is there anything in Exhibit S-1 to your knowledge that talks about pure carbon?

A. No, sir.

MR. WILLIAMSON: Thank you. That's all we've got.

FURTHER RECROSS EXAMINATION

BY MR. SMITH:

Q. I want to clear up--and I think we can clear up this whole discussion. Under what authority is spent carbon carbon containing DNBP hazardous waste? Under RCRA.

A. Discarded commercial chemical.

Q. And you're taking the position today that is EPA's opinion?

A. That's my opinion.

Q. You appear on behalf of EPA, don't you?

A. Yes, sir. We don't all have the same interpretation of the regulations.

MR. SMITH: That's all we have.

FURTHER REDIRECT EXAMINATION

BY MR. WILLIAMSON:

Q. Ms. Spagg, we talked about the carbon from the carbon filtration units being backwashed and intentionally mixed with wastewater and in fact being put back into an impoundment. Do you recall that?

A. Yes, sir.

Q. In your opinion would that take this impoundment out from under a de minimis exception?

A. If there's a regulated waste stream--let me back up a minute. Are you speaking to the backwash water after it's cleaned---

Q. I'm talking about the carbon.

A. The carbon itself after it's spent? You're asking me is it a RCRA regulated waste?

Q. If it contains DNBP.

A. It's my understanding that it would.

Q. That went back in the impoundment then. Would that take the impoundment out from under the de minimis exception?

A. It's a completely separate scenario. It doesn't have anything to do with the de minimis exclusion rule.

Q. So it would bring it in to regulation?

A. It would make the unit regulated because it's receiving all this regulated waste.

Q. As a PO20?

A. Yes.

MR. WILLIAMSON: That's all I've got.

HEARING OFFICER: Are you through?

MR. SMITH: With this witness, yes, sir.

[WITNESS EXCUSED]

MR. WILLIAMSON: That's all I've got.

[STATE RESTS]

MR. SMITH: We'd like to clear up this waste drum situation. I think we've got one very brief rebuttal witness.

HEARING OFFICER: All right.

REBUTTAL TESTIMONY OF GARY DIETRICH,

remaining under oath, testified as follows, to-wit:

DIRECT EXAMINATION

BY MR. KAUFMAN:

Q. Mr. Dietrich, is spent carbon which contains dinoseb hazardous waste under RCRA?

A. It is not listed as a hazardous waste under RCRA; so I would say it is not a hazardous waste.

Q. Are you familiar with the inspection report that was completed by Mr. Lee, David Lee, about which there's been testimony here for some time?

A. Yes. I received last Friday a number of inspection reports for the last several years, one of which was

the inspection report you refer to, and I reviewed those as part of my preparing for this case. In that particular inspection report I did note that finding of David Lee that there were some 700 drums in deteriorating shape in a storage area.

Q. Did you investigate the matter further?

A. Yes, I did, because I was concerned. At the time the records show that you had drums with alleged hazardous waste in them. If in fact that was true and there was leakage from those drums and that leakage got into the impoundment, then the de minimis rule would not apply to that introduction of hazardous waste. As a result, yesterday when I made my plant visit I spent a good deal of time with Sonny Keen going over this particular situation. What I learned was as follows---

MR. WILLIAMSON: I'm going to object to the introduction of this information, because it's based on hearsay from what Mr. Keen apparently told him. Mr. Keen is not here; so I would object to an introduction of this testimony.

HEARING OFFICER: Your objection is noted; but let him go ahead and speak.

BY MR. KAUFMAN:

Q. Go ahead, Gary, and continue.

A. What was contained in those drums was clean acti-

vated carbon that was being inventoried for the firm that was running the acid plant. The reason that the material was being stored in the drums is because the firm that was running that acid plant could empty the activated carbon more readily into their tank by lifting it up on a forklift trunk and dumping it into the tank. They could handle the material a lot easier than they could handle in bags or that they could handle cardboard drums.

So what Cedar, or Vertac I guess at that time, did was it--the carbon, the clean activated carbon that it received, it put in drums, some of which I supposed were older drums. Many of those drums or maybe all of the drums remained open and water was able to get in them.

What you were dealing with was clean, activated carbon. I asked again, how can you make certain that there was no spent activated carbon in those drums? The answer that I got was that all of the activated carbon what was removed both from that acid plant and the activated carbon that is removed from the current carbon filters is removed and put directly into tank trucks and taken to off-site regeneration; that there is no spent carbon, and there never has been spent carbon, stored in drums on the site.

From that inquiry I convinced myself that that inspection report was probably in error. Certainly I convinced myself that there were not hazardous waste stored in

that area, and there was no possibility of hazardous waste leaking from those drums draining into the pond and causing it to be a hazardous waste facility.

Q. All of that aside, was there any evidence whatsoever that whatever the contents of those drums were that any of it got to the pond?

A. I saw no evidence that any of it got to the pond.

MR. KAUFMAN: No further questions.

CROSS EXAMINATION

BY MR. WILLIAMSON:

Q. Do you have any personal knowledge of what was contained in those drums, Mr. Dietrich?

A. Of course I don't.

Q. All you know is what Mr. Keen told you; is that right?

A. That's right; after a very careful inquiry.

Q. I'm sure you were careful all right. I want to show you what's marked as Exhibit S-1. Do you recognize that?

A. I do.

Q. Do you see the entry under Requirement 402.7-173?

A. Yes.

Q. What does the third and fourth word of that entry say?

A. "Hazardous waste."

Q. Over here under the comments does it say something about oozing dark material?

A. It says, "A number of drums containing carbon were rusted through; some oozing dark liquid."

Q. Okay. So it's your testimony to the Commission that all these drums contained clean carbon. Is that what you're saying?

A. That is what I'm saying.

Q. Would clean carbon cause deterioration of those drums?

A. The drums could be deteriorated before the carbon was ever put in.

Q. It could be; but you don't have any personal knowledge of that, do you?

A. I do not have any personal knowledge.

Q. How about the dark oozing, do you think clean carbon would cause dark oozing from the drums?

A. Yes, I certainly do.

Q. Oh, you do?

A. Yes.

Q. Have you ever seen activated carbon?

A. I certainly have.

Q. Have you mixed it with a beaker?

A. Yes, I have.

Q. Does it ooze?

A. Yes, it does.

Q. So your testimony is that none of those drums contain spent carbon.

A. My testimony is that none---

Q. Do you recall Mr. Keen saying earlier---

MR. SMITH: Let's let him finish his answer, George, before you ask the next question. He was in mid-sentence. Let him finish his answer.

BY MR. WILLIAMSON:

Q. Go ahead and finish, Mr. Dietrich.

A. My testimony was that the drums did not contain spent carbon.

Q. How many drums did that report indicate was there?

A. I don't think it does.

Q. Read a---

A. Oh, 700. I'm sorry. "Approximately 700 drums total."

Q. Do you have any reason to disbelieve that figure?

A. I do not.

Q. Do you have any personal knowledge that that figure is wrong?

A. I do not.

Q. Do you recall Mr. Keen saying earlier when he was here that there was never more than 20 to 30 barrels or drums of carbon at the site?

A. I recall he said there was no more than 20 drums of spent carbon at the site.

MR. WILLIAMSON: That's all.

[WITNESS EXCUSED]

MR. SMITH: That's all we have, and we appreciate y'all hearing us.

HEARING OFFICER: Do you want to make any kind of closing statement?

MR. SMITH: I'd just as soon waive all of that and do it in a brief, if that's okay with y'all. I don't think y'all care what I think at this point.

[LAUGHTER]

HEARING OFFICER: Do you want to outline what you want in the brief?

COMMISSIONER TRAVIS: I don't know that this is all that applicable now, because I do think that we're going to have to have the transcript.

HEARING OFFICER: I think it would still be helpful to you even with the transcript.

COMMISSIONER TRAVIS: It would be helpful. The only thing I was thinking, and I know that it's a burden on the lawyers; but I do think that a memo, not a real brief but just a memo that can be fairly short, would be very helpful to the Commission to make this--in helping us make a decision. I had in mind simply that this memo would cover

at least these materials, and I'm not suggesting the form necessarily; but I think it would be helpful if you would cover these items.

That is, of course, first, to state what you consider to be the central question that is before the Commission, or questions, that you want us to decide. And then, of course, the applicable facts that you think from the testimony that has been derived here today that apply to these questions. What are the pertinent statutes, the laws, the regulations, the explanatory material that you want us to consider.

MR. WILLIAMSON: Mr. Travis, may I ask you to slow down just one second.

COMMISSIONER TRAVIS: Sure. The first thing I'm asking you to do is to outline for us the question or questions that you think are significant. Second, the applicable facts from the testimony. Third, the pertinent statutory law and explanatory material.

MR. WILLIAMSON: Statutory or regulatory--the regulations?

COMMISSIONER TRAVIS: Yes, regulatory. The statutes, the regulations, and the explanatory material that goes with it. And then next, a brief statement of how you think the facts and the law support your position. And then finally a conclusion. Again, I'm not suggesting the form;

but I think these things would be helpful to us to help us focus in on making this decision.

Now I would like to say on behalf of the Commission, if I may, that this has been a well presented hearing. Both sides have been well prepared, and you have done an excellent job of presenting a very important case to this Commission for our consideration, and I want to congratulate you and thank you for so doing.

I'd like to say to the company that no matter what you have to pay these attorneys, and I know that fees are high--$20 to $25 an hour---

[LAUGHTER]

MR. SMITH: I was just about to brag on you to my law partners, Mr. Travis.

COMMISSIONER TRAVIS: You men have done an excellent job. And, George, you and your staff have also done an excellent job in focusing in and presenting to us the matters that are most appropriate here.

We will do our best to give you a prompt decision which I know will not make either side perhaps totally happy; but we will do our best to consider this evidence presented today and the arguments and presentations that you have made and will make in behalf of your clients to give you a full decision at the earliest possible time.

The next time we meet is October 22, and I would

hope that before that time we would have had the record, and I don't know that we will be able to give you a decision at that time, but we will do our best to give you a decision either then or shortly thereafter.

And anything, any deadlines that have been set previously--you mentioned October 1 to do something. But whatever those deadlines are, you can consider on the authority of the Commission--and I will get the approval by telephone vote tomorrow---

HEARING OFFICER: Yes, I'll do that.

COMMISSIONER TRAVIS: ---to move those deadlines back in such fashion that this will give us time to make---

HEARING OFFICER: That's only those deadlines that are affected by this decision, obviously.

MR. SMITH: Sure.

COMMISSIONER TRAVIS: Whatever they are.

MR. WILLIAMSON: Mr. Travis, I don't mind certainly doing the memo that you requested. I think though that in order to do the memo properly that I'm going to have to have a copy of the transcript.

COMMISSIONER TRAVIS: Okay. If you think you need the transcript, then let's get the transcript first and then the memos can follow. This might delay our decision.

MR. WILLIAMSON: As I--Mr. Smith's recollection of the facts may be somewhat different than mine, and rather

than us argue---

COMMISSIONER TRAVIS: Well I was hoping that we wouldn't get into the memo into recitations referring to the testimony at a certain page in the transcript, because I think it is going to make the memo much longer.

MR. SMITH: I don't see that as any problem. I certainly don't need the transcript, I think, to prepare what you've got in mind.

COMMISSIONER TRAVIS: You two counsel work that out, and whatever you decide is fine.

MR. WILLIAMSON: I want the transcript. I don't want to be preparing a memo that may be used at some later date on appeal when I don't have my transcript in front of me.

COMMISSIONER TRAVIS: Whatever you decide is certainly all right with us. If you think you need the transcript and want to refer to it, fine. Bill, if you don't need it or if you want to wait since George wants to wait, that's fine. But we'll give you a decision as promptly as we can, based on when we get the transcript ourselves and these memos.

HEARING OFFICER: We have a couple of missing exhibits which I need before you leave. We thank you.

--HEARING CONCLUDED AT 7:00 P.M.--

CERTIFICATE OF COURT REPORTER

I, Kay E. Miles, Court Reporter and Notary Public in and for the County of Hinds, State of Mississippi, hereby certify;

That on the 16th day of September 1986 the foregoing proceedings were taken by me in shorthand with electronic verification and thereafter reduced to typewritten form by me and under my supervision, and the foregoing 269 pages contain a full, true and correct transcript of those proceedings;

That under the authority vested in me by the State of Mississippi I placed the witnesses under oath to truthfully answer all questions in this matter;

That I am not in the employ of, or related to, any counsel or party in this matter and have no interest, monetary or otherwise, in the final outcome of this proceeding.

Witness my signature and seal this the 6th day of November 1986.

Kay E. Miles

Kay E. Miles

My Commission Expires:
March 9, 1989

Court Reporters Supply House Style # 4-S